City of Carlsbad

San Diego County

California

CONTRACT DOCUMENTS, GENERAL PROVISIONS, SUPPLEMENTAL PROVISIONS, AND TECHNICAL SPECIFICATIONS

FOR

POINSETTIA LIFT STATION GENERATOR REPLACEMENT

CONTRACT NO. 3840-23

BID NO. PWS24-2361

e - Bidding

TABLE OF CONTENTS

Item **Page**

Notice Inviting Bids 7

Contractor's Proposal.....14

Listing of Manufacturers.....18

Bid Security Form 19

Bidder’s Bond to Accompany Proposal 20

Guide for Completing the “Designation of Subcontractors” Form 21

Designation of Subcontractor and Amount of Subcontractor’s Bid Items 23

Bidder's Statement of Technical Ability and Experience.....24

Bidder’s Certificate of Insurance for General Liability, Employers’ Liability, Automotive Liability and Workers’ Compensation 25

Bidder’s Statement Re Debarment.....26

Bidder's Disclosure of Discipline Record ……. 27

Noncollusion Declaration to Be Executed by Bidder and Submitted with Bid.....29

Contract Public Works.....30

Labor and Materials Bond 37

Faithful Performance/Warranty Bond 39

Optional Escrow Agreement for Surety Deposits in Lieu of Retention 41

GENERAL PROVISIONS

Section 1	Terms, Definitions Abbreviations and Symbols	
1-1	Terms	44
1-2	Definitions	44
1-3	Abbreviations	50
1-4	Units of Measure	53
1-5	Symbols	54
Section 2	Scope and Control of The Work	
2-1	Award and Execution of Contract	55
2-2	Assignment	55
2-3	Subcontracts	55
2-4	Contract Bonds	56
2-5	Plans and Specifications	57
2-6	Work to be Done	61
2-7	Subsurface Data	62
2-8	Right-of-Way	62
2-9	Surveying	62
2-10	Authority of Board and Engineer	63
2-11	Inspection	64
Section 3	Changes in Work	
3-1	Changes Requested by the Contractor	65
3-2	Changes Initiated by the Agency	65
3-3	Extra Work	66
3-4	Changed Conditions	69
3-5	Disputed Work	70
Section 4	Control of Materials	
4-1	Materials and Workmanship	76
4-2	Materials Transportation, Handling and Storage	80
Section 5	Utilities	
5-1	Location	81
5-2	Protection	81
5-3	Removal	82
5-4	Relocation	82
5-5	Delays	83
5-6	Cooperation	83
Section 6	Prosecution, Progress and Acceptance of the Work	
6-1	Construction Schedule and Commencement of Work	84
6-2	Prosecution of Work	86
6-3	Suspension of Work	88
6-4	Default by Contractor	89
6-5	Termination of Contract	90
6-6	Delays and Extensions of Time	90
6-7	Time of Completion	91
6-8	Completion, Acceptance, and Warranty	92
6-9	Liquidated Damages	93

6-10 Use of Improvement During Construction 93

Section 7 Responsibilities of the Contractor
7-1 Contractor's Equipment and Facilities 95
7-2 Labor 95
7-3 Liability Insurance 95
7-4 Workers' Compensation Insurance 95
7-5 Permits 96
7-6 The Contractor's Representative..... 97
7-7 Cooperation and Collateral Work 98
7-8 Project Site Maintenance 99
7-9 Protection and Restoration of Existing Improvements 101
7-10 Public Convenience and Safety 102
7-11 Patent Fees or Royalties..... 110
7-12 Advertising..... 110
7-13 Laws to be Observed 110
7-14 Antitrust Claims..... 110

Section 8 Facilities for Agency Personnel
8-1 General..... 111

Section 9 Measurement and Payment
9-1 Measurement of Quantities for Unit Price Work 112
9-2 Lump Sum Work 112
9-3 Payment 112
9-4 Bid Items..... 116

SUPPLEMENTAL PROVISIONS TO PART 2, 3, 4 AND 6 OF THE SSPWC

Part 2 Construction Materials

Section 200 Rock Materials
200-2 Untreated Base Materials..... 118

Section 201 Concrete, Mortar and Related Materials
201-1 Portland Cement Concrete 118

Section 203 Bituminous Materials
203-6 Asphalt Concrete 119

Section 213 Engineering Fabrics
213-5 Geotextiles and Geogrids..... 120

Part 3 Construction Methods

Section 300 Earthwork
300-2 Unclassified Excavation 121
300-12 Storm Water Pollution Prevention Plan 121

Section 301 Treated Soil, Subgrade Preparation and Placement of Base Materials
301-1 Subgrade Preparation.....124

Section 302 Roadway Surfacing
302-5 Asphalt Concrete Pavement 124
302-15 Public Convenience and Traffic Control 125

Section 303 Concrete and Masonry Construction.
303-1 Concrete Structures 126
303-5 Concrete Curbs, Walks, Gutters, Cross Gutters, Alley Intersections, Access Ramps, And Driveways 126

Section 306 Underground Conduit Construction
306-3 Open Trench Operations 127
306-12 Backfill 128
306-13 Trench Resurfacing 128

Part 4 Existing Improvements

Section 400 Protection and Restoration
400-1 General 129
400-2 Permanent Survey Markers 129
400-3 Payment 129

Section 401 Removal
401-3 Concrete and Masonry Improvements 129

Part 6 Temporary Traffic Control

Section 601 Temporary Traffic Control for Construction and Maintenance Work Zones
601-1 General 130
601-3 Temporary Traffic Control (TTC) Zone Devices 130
601-4 Temporary Traffic Striping and Pavement Markings 134

TECHNICAL SPECIFICATIONS

DIVISION 1 – GENERAL REQUIREMENTS

01190	Structural Design Requirements
01650	Facility Commissioning, Testing and Startup
01700	Contract Closeout

DIVISION 2 – SITE WORK

02050	Demolition
02223	Earthwork
02516	Disinfection
02700	Paving and Surfacing

DIVISION 10 – SPECIALTIES

10200	Louvers
10400	Identifying Devices

DIVISION 15 - MECHANICAL

15050	Piping, Valves, and Accessories
15800	Heating, Ventilating, and Air Conditioning Air Distribution

DIVISION 16 – ELECTRICAL

16010	General Electrical Requirements
16110	Electrical Raceway Systems
16120	Low Voltage Wire and Cable
16124	Signal Cable
16205	Standby Diesel Engine-Generator Sets
16250	Automatic and Manual Transfer Switches
16402	Underground Electrical Work
16450	Electrical Grounding
16950	Electrical Test
16961	Power System Studies

APPENDICES

A - Building Permit Application Template
B - Station As-Built Drawings for Reference Only
C - CARB Fleet Compliance Certification

CITY OF CARLSBAD, CALIFORNIA
NOTICE INVITING BIDS

Until 11 a.m. on March 14, 2024, the City shall accept bids via electronic format via the City of Carlsbad Electronic Bidding Site, PlanetBids, which may be accessed at https://www.carlsbadca.gov/departments/finance/contracting-purchasing, for performing the work as follows: replacement of a 250 kilowatt standby diesel engine-generator set and associated electrical and control system improvements at the Poinsettia Sewer Lift Station.

POINSETTIA LIFT STATION GENERATOR REPLACEMENT
CONTRACT NO. 3840-23
PWS24-2361UTIL

ELECTRONIC FORMAT RECEIPT AND OPENING OF BIDS: Bids will be received in electronic format (eBids) EXCLUSIVELY at the City of Carlsbad's electronic bidding (eBidding) site, at: Contracting & Purchasing | Carlsbad, CA (carlsbadca.gov) **and are due by the date and time shown on the cover of this solicitation.**

BIDDERS MUST BE PRE-REGISTERED with the City's bidding system and possess a system-assigned Digital ID in order to submit an electronic bid.

The City's electronic bidding (eBidding) system will automatically track information submitted to the site including IP addresses, browsers being used and the URLs from which information was submitted. In addition, the City's bidding system will keep a history of every login instance including the time of login, and other information about the user's computer configuration such as the operating system, browser type, version, and more. Because of these security features, Bidders who disable their browsers' cookies will not be able to log in and use the City's bidding system.

The City's electronic bidding system is responsible for bid tabulations. Upon the bidder's or proposer's entry of their bid, the system will ensure that all required fields are entered. The system will not accept a bid for which any required information is missing. This includes all necessary pricing, subcontractor listing(s) and any other essential documentation and supporting materials and forms requested or contained in these solicitation documents.

BIDS REMAIN SEALED UNTIL DUE DATE AND TIME
eBids are transmitted into the City's bidding system via hypertext transfer protocol secure (https) mechanism using SSL 128-256-bit security certificates issued from Verisign/Thawte which encrypts data being transferred from client to server. Bids submitted prior to the Due Date and Time are not available for review by anyone other than the submitter, who will have until the Due Date and Time to change, rescind or retrieve its bid should they desire to do so**.**

BIDS MUST BE SUBMITTED BY DUE DATE AND TIME
Once the deadline is reached, no further submissions are accepted into the system. Once the Due Date and Time has passed, bidders, proposers, the general public, and City staff are able to immediately see the results online. City staff may then begin reviewing the submissions for responsiveness, compliance and other issues.

RECAPITULATION OF THE WORK
Bids shall not contain any recapitulation of the Work. Conditional Bids may be rejected as being non-responsive. Alternative proposals will not be considered unless called for.

BIDS MAY BE WITHDRAWN by the Bidder prior to, but not after, the time set as Due Date and Time.

Important Note: Submission of the electronic bid into the system may not be instantaneous. Due to the speed and capabilities of the user's internet service provider (ISP), bandwidth, computer hardware and other variables, it may take time for the bidder's submission to upload and be received by the City's eBidding system. It is the bidder's sole responsibility to ensure their bids are received on time by the City's eBidding system. The City of Carlsbad is not responsible for bids that do not arrive by the Due Date and Time.

ELECTRONIC SUBMISSIONS CARRY FULL FORCE AND EFFECT
The Bidder, by submitting their electronic proposal, agrees to and certifies under penalty of perjury under the laws of the State of California, that the certification, forms and affidavits submitted as part of this proposal are true and correct. The bidder, by submitting its electronic bid, acknowledges that doing so carries the same force and full legal effect as a paper submission with a longhand (wet) signature. By submitting an electronic bid, the bidder certifies that the bidder has thoroughly examined and understands the entire Contract Documents (which consist of the plans and specifications, drawings, forms, affidavits and the solicitation documents), and that by submitting the eBid as its bid proposal, the bidder acknowledges, agrees to and is bound by the entire Contract Documents, including any addenda issued thereto, and incorporated by reference in the Contract Documents.

BIDS ARE PUBLIC RECORDS
Upon receipt by the City, bids shall become public records subject to public disclosure. It is the responsibility of the Bidder to clearly identify any confidential, proprietary, trade secret or otherwise legally privileged information contained within the proposal's General references to sections of the California Public Records Act (PRA) will not suffice. If the Bidder does not provide applicable case law that clearly establishes that the requested information is exempt from the disclosure requirements of the PRA, the City shall be free to release the information when required in accordance with the PRA, pursuant to any other applicable law, or by order of any court or government agency, and the Bidder agrees to hold the City harmless for any such release of this information.

INSTRUCTIONS TO BIDDERS AND BID REQUIREMENTS
This bid and the terms of the Contract Documents and General Provisions constitute an irrevocable offer that shall remain valid and in full force for a period of 90 days and such additional time as may be mutually agreed upon by the City of Carlsbad and the Bidder.

No bid will be received unless it is made on a proposal form furnished by the Purchasing Department. Each bid must be accompanied by security in a form and amount required by law. The bidder's security of the second and third next lowest responsive bidders may be withheld until the Contract has been fully executed. The security submitted by all other unsuccessful bidders shall be returned to them, or deemed void, within ten (10) days after the Contract is awarded. Pursuant to the provisions of law (Public Contract Code section 10263), appropriate securities may be substituted for any obligation required by this notice or for any monies withheld by the City to ensure performance under this Contract. Section 10263 of the Public Contract Code requires monies or securities to be deposited with the City or a state or federally

chartered bank in California as the escrow agent. The escrow agent shall maintain insurance to cover negligent acts and omissions of the agent in connection with the handling of retentions under this section in an amount not less than $100,000 per contract.

The City of Carlsbad may disqualify a contractor or subcontractor from participating in bidding when a contractor or subcontractor has been debarred by the City of Carlsbad or another jurisdiction in the State of California as an irresponsible bidder.

The work shall be performed in strict conformity with the plans, provisions, and specifications as approved by the City Council of the City of Carlsbad on file with the City Clerk's Office. The specifications for the work include City of Carlsbad Technical Specifications and the 2021 Standard Specifications for Public Works Construction, Parts 2 - 8, all hereinafter designated "SSPWC", as amended. Specification Reference is hereby made to the plans and specifications for full particulars and description of the work. The General Provisions (Part 1) to the SSPWC do not apply.

The City of Carlsbad encourages the participation of minority and women-owned businesses.

The City of Carlsbad encourages all bidders, suppliers, manufacturers, fabricators and contractors to utilize recycled and recyclable materials when available, appropriate and approved by the Engineer.

BID DOCUMENTS

The bid documents comprise the following documents which must be completed and properly executed including notarization, where indicated.

1. Contractor's Proposal
2. Bidder's Bond (at time of Bid submit PDF copy via PlanetBids / All Bidders). Bid Bond (Original) within two (2) business days of bid Opening / three (3) Apparent Low Bidders.
3. Noncollusion Declaration
4. Designation of Subcontractor and Amount of Subcontractor's Bid
5. Bidder's Statement of Technical Ability and Experience
6. Acknowledgement of Addendum(a)
7. Certificate of Insurance. The riders covering the City, its officials, employees and volunteers may be omitted at the time of bid submittal but shall be provided by the Bidder prior to award of this contract.
8. Bidder's Statement Re Debarment
9. Bidder's Disclosure of Discipline Record
10. CARB Fleet Compliance Certification (Appendix C)
11. Escrow Agreement for Security Deposits - (optional, must be completed if the Bidder wishes to use the Escrow Agreement for Security)

BIDDER'S GUARANTEE OF GOOD FAITH (BID SECURITY)

At the time of bid submission, bidders must upload and submit an electronic PDF copy of the aforementioned bid security. Whether in the form of a cashier's check, a properly certified check or an approved corporate surety bond payable to the City of Carlsbad, the bid security must be uploaded to the City's eBidding system. Within two (2) business days after the bid opening date, the first three (3) apparent low bidders must provide the City with the original bid security.

Failure to submit the electronic version of the bid security at time of bid submission shall cause the bid to be rejected and deemed **non-responsive**. Only the three (3) apparent low bidders are

required to submit original bid security to the City within two (2) business days after bid opening date. Failure to provide the original within two (2) business days may deem the bidder **non-responsive**.

ENGINEER'S ESTIMATE

All bids will be compared on the basis of the Engineer's Estimate. The estimated quantities are approximate and serve solely as a basis for the comparison of bids. The Engineer's Estimate is $615,000.

TIME OF COMPLETION

The Contractor shall complete the Work within the time set in the contract as defined in the General Provisions Section 6-7.

SPECIALTY CONTRACTORS:
ACCEPTABLE LICENSE TYPES

Except as provided herein a bid submitted to the City by a Contractor who is not licensed as a contractor pursuant to the Business and Professions Code shall be considered nonresponsive and shall be rejected by the City. In all contracts where federal funds are involved, no bid submitted shall be invalidated by the failure of the bidder to be licensed in accordance with California law. Where federal funds are involved the contractor shall be properly licensed at the time the contract is awarded. In all other cases the contractor shall state their license number, expiration date and classification in the proposal, under penalty of perjury. This invitation to bid does **not** use federal funds. The following classifications are acceptable for this contract: **A - General Engineering** or **C-10 - Electrical**.

ESCROW AGREEMENT

If the Contractor intends to utilize the escrow agreement included in the contract documents in lieu of the usual 5% retention from each payment, these documents must be completed and submitted with the signed contract. The escrow agreement may not be substituted at a later date.

OBTAINING PLANS AND SPECIFICATIONS

Sets of plans, various supplemental provisions, and Contract documents may be obtained from the City of Carlsbad website at https://www.carlsbadca.gov/departments/finance/contracting-purchasing Paper copies will not be sold.

INTENT OF PLANS AND SPECIFICATIONS

Any prospective bidder who is in doubt as to the intended meaning of any part of the drawings, specifications or other contract documents, or finds discrepancies in or omissions from the drawings and specifications may submit to the Engineer a written request for clarification or correction. Any response will be made only by a written addendum duly issued by the Engineer a copy of which will be mailed or delivered to each person receiving a set of the contract documents. No oral response will be made to such inquiry. **Prior to the award of the contract, no addition to, modification of or interpretation of any provision in the contract documents will be given by any agent, employee or contractor of the City of Carlsbad except as hereinbefore specified. No bidder may rely on directions given by any agent, employee or contractor of the City of Carlsbad except as hereinbefore specified.**

BIDDER'S INQUIRIES

Questions on the bid documents during the bid period shall be submitted in writing, via the eBidding website.

Questions shall be definite and certain and shall reference applicable drawing sheets, notes, details or specification sheets.

The cutoff date to submit questions is February 28, 2024, at 5 p.m. No questions will be entertained after that date.

The answers to questions submitted during the bidding period will be published in an addendum and provided to those bidding on the project no later than March 4, 2024.

REJECTION OF BIDS

The City of Carlsbad reserves the right to reject any or all bids and to waive any minor irregularity or informality in such bids.

PREVAILING WAGE TO BE PAID

The general prevailing rate of wages for each craft or type of worker needed to execute the Contract shall be those as determined by the Director of Industrial Relations pursuant to the sections 1770, 1773, and 1773.1 of the Labor Code. Pursuant to section 1773.2 of the Labor Code, a current copy of applicable wage rates is on file in the Office of the City Engineer. The Contractor to whom the Contract is awarded shall not pay less than the said specified prevailing rates of wages to all workers employed by him or her in the execution of the Contract.

The Prime Contractor shall be responsible for insuring compliance with provisions of section 1777.5 of the Labor Code and section 4100 et seq. of the Public Contracts Code, "Subletting and Subcontracting Fair Practices Act." The City Engineer is the City's "duly authorized officer" for the purposes of section 4107 and 4107.5.

The provisions of Part 7, Chapter 1, of the Labor Code commencing with section 1720 shall apply to the Contract for work.

A contractor or subcontractor shall not be qualified to bid on, be listed in a bid proposal, subject to the requirements of Section 4104 of the Public Contract Code or engage in the performance of any contract for public work, unless currently registered and qualified to perform public work pursuant to Section 1725.5. This project is subject to compliance monitoring and enforcement by the Department of Industrial Relations.

The Prime Contractor and all subcontractors shall comply with Section 1776 of the Labor Code, which generally requires keeping accurate payroll records, verifying and certifying payroll records, and making them available for inspection. Contractor shall require all subcontractors to comply with Section 1776.

CALIFORNIA AIR RESOURCES BOARD (CARB) ADVANCED CLEAN FLEETS REGULATIONS

Contractor's vehicles with a gross vehicle weight rating greater than 8,500 lbs. and light-duty package delivery vehicles operated in California may be subject to the California Air Resources Board (CARB) Advanced Clean Fleets regulations. Such vehicles may therefore be subject to requirements to reduce emissions of air pollutants. For more information, please see Appendix C and visit the CARB Advanced Clean Fleets webpage at https://ww2.arb.ca.gov/our-work/programs/advanced-clean-fleets.

MANDATORY PRE BID MEETING

A **mandatory** Pre-Bid Meeting will be held at the project site at the below address on **February 21, 2024 at 10:00 a.m**.

Address: **2351 Geode Lane, Carlsbad CA 92009**

Bidders will be provided access to the facility and portions of the site subject to improvement. Representatives of the Agency will be present. Questions asked by Bidders at the Pre-Bid Meeting not specifically addressed within the Contract Documents shall be answered in writing and shall be sent to all Bidders present at the Pre-Bid Meeting and be posted on the online bidding portal. Bids will not be accepted from any bidder who did not attend the mandatory Pre-Bid Meeting.

UNIT PRICES AND COMPUTATION OF BIDS

All bids are to be computed on the basis of the given estimated quantities of work, as indicated in this proposal, times the unit price as submitted by the bidder.

ADDENDA

Bidders are advised to verify the issuance of all addenda and receipt thereof one day prior to bidding. Submission of bids without acknowledgment of addenda may be cause of rejection of bid.

BOND AND INSURANCE REQUIREMENTS

The Contractor shall provide bonds to secure faithful performance and warranty of the work in an amount equal to one hundred percent (100%) of the Contract price on this project. The Contractor shall provide bonds to secure payment of laborers and materials suppliers, in an amount equal to one hundred percent (100%) of the total amount payable by the terms of the contract. These bonds shall be kept in full force and effect during the course of this project and shall extend in full force and effect and be retained by the City until they are released as stated

in the General Provisions section of this contract. All bonds are to be placed with a surety insurance carrier admitted and authorized to transact the business of insurance in California and whose assets exceed their liabilities in an amount equal to or in excess of the amount of the bond. The bonds are to be accompanied by the following documents:

1. An original, or a certified copy, of the unrevoked appointment, power of attorney, by laws, or other instrument entitling or authorizing the person who executed the bond to do so.
2. A certified copy of the certificate of authority of the insurer issued by the insurance commissioner.

If the bid is accepted, the City may require copies of the insurer's most recent annual statement and quarterly statement filed with the Department of Insurance pursuant to Article 10 (commencing with section 900) of Chapter 1 of Part 2 of Division 1 of the Insurance Code, within 10 calendar days of the insurer's receipt of a request to submit the statements.

Insurance is to be placed with insurers that:

1. Have a rating in the most recent Best's Key Rating Guide of at least A-:VII
2. Are admitted and authorized to transact the business of insurance in the State of California by the Insurance Commissioner.

Auto policies offered to meet the specification of this contract must:

1. Meet the conditions stated above for all insurance companies.
2. Cover <u>any vehicle</u> used in the performance of the contract, used onsite or offsite, whether owned, non-owned or hired, and whether scheduled or non-scheduled.

Workers' compensation insurance required under this contract must be offered by a company meeting the above standards with the exception that the Best's rating condition is waived. The City does accept policies issued by the State Compensation Fund meeting the requirement for workers' compensation insurance.

The Contractor shall be required to maintain insurance as specified in the Contract. Any additional cost of said insurance shall be included in the bid price.

The award of the contract by the City is contingent upon the Contractor submitting the required bonds and insurance, as described in the contract, within twenty days of bid opening. If the Contractor fails to comply with these requirements, the City may award the contract to the second or third lowest bidder and the bid security of the lowest bidder may be forfeited.

<u>BUSINESS LICENSE</u>

The prime contractor and all subcontractors are required to have and maintain a valid City of Carlsbad Business License for the duration of the contract.

Approved by the City Council of the City of Carlsbad, California, by Resolution No. 2024-XXX, adopted on the 6th day of February 2024.

February 7, 2024	
Date	Graham Jordan, Deputy Clerk

CITY OF CARLSBAD

LIFT STATION IMPROVEMENT PROGRAM
POINSETTIA LIFT STATION GENERATOR REPLACEMENT
CONTRACT NO. 3840-23

CONTRACTOR'S PROPOSAL

City Council
City of Carlsbad
1200 Carlsbad Village Drive
Carlsbad, California 92008

The undersigned declares he/she has carefully examined the location of the work, read the Notice Inviting Bids, examined the Plans, Specifications, General Provisions, Contract Documents, and addenda thereto, and hereby proposes to furnish all labor, materials, equipment, transportation, and services required to do all the work to complete Contract No. 3840-23 in accordance with the Plans, Specifications, General Provisions, Contract Documents, and addenda thereto and that he/she will take in full payment therefore the following unit prices for each item complete, to wit (refer to Section 9-4 for bid item descriptions):

SCHEDULE "A"

Item No.	Description	Approximate Quantity And Unit	Unit Price (Figures)	Total Amount (Figures)
1	Mobilization and Preparatory Work (not to exceed 5% of Total Bid)	LS		$_____
2	Permitting and Design Services	LS		$_____
3	Furnish and Install Temporary Back Up Generator	LS		$_____
4	Demolition	LS		$_____
5	Furnish and Install Automatic and Manual Transfer Switches	LS		$_____
6	Furnish and Install Generator Set (250-kW)	LS		$_____
7	Building and Site Improvements	LS		$_____

Total amount of bid (in figures) for Schedule “A”: $_____

Total amount of bid (in words) for Schedule “A”: _____

_____

The City shall determine the low bid based on the sum of Schedule “A”.

Price(s) given above are firm for 90 days after the date of bid opening.

Addendum(a) No(s). _____ has/have been received and is/are included in this proposal.

The Undersigned has carefully checked all of the above figures and understands that the City will not be responsible for any error or omission on the part of the Undersigned in preparing this bid.

The Undersigned agrees that in case of default in executing the required Contract with necessary bonds and insurance policies within twenty (20) days from the date of award of Contract by the City Council of the City of Carlsbad, the City may administratively authorize award of the contract to the second or third lowest bidder and the bid security of the lowest bidder may be forfeited.

The Undersigned bidder declares, under penalty of perjury, that the undersigned is licensed to do business or act in the capacity of a contractor within the State of California, validly licensed under license number _____, classification _____ which expires on _____, and Department of Industrial Relations PWC registration number _____ which expires on _____, and that this statement is true and correct and has the legal effect of an affidavit.

A bid submitted to the City by a Contractor who is not licensed as a contractor pursuant to the Business and Professions Code shall be considered nonresponsive and shall be rejected by the City § 7028.15(e). In all contracts where federal funds are involved, no bid submitted shall be invalidated by the failure of the bidder to be licensed in accordance with California law. However, at the time the contract is awarded, the contractor shall be properly licensed.

The Undersigned bidder hereby represents as follows:

1. That no Council member, officer agent, or employee of the City of Carlsbad is personally interested, directly or indirectly, in this Contract, or the compensation to be paid hereunder; that no representation, oral or in writing, of the City Council, its officers, agents, or employees has inducted him/her to enter into this Contract, excepting only those contained in this form of Contract and the papers made a part hereof by its terms; and

2. That this bid is made without connection with any person, firm, or corporation making a bid for the same work, and is in all respects fair and without collusion or fraud.

Accompanying this proposal is _____ (Cash, Certified Check, Bond or Cashier's Check) for ten percent (10%) of the amount bid.

The Undersigned is aware of the provisions of section 3700 of the Labor Code which requires every employer to be insured against liability for workers' compensation or to undertake self-insurance in accordance with the provisions of that code and agrees to comply with such provisions before commencing the performance of the work of this Contract and continue to comply until the contract is complete.

The Undersigned is aware of the provisions of the Labor Code, Part 7, Chapter 1, Article 2, relative to the general prevailing rate of wages for each craft or type of worker needed to execute the Contract and agrees to comply with its provisions.

IF A SOLE OWNER OR SOLE CONTRACTOR SIGN HERE:

(1) Name under which business is conducted _____

(2) Signature (given and surname) of proprietor _____

(3) Place of Business _____
(Street and Number)
City and State _____

(4) Zip Code _____ Telephone No. _____

(5) E-Mail _____

IF A PARTNERSHIP, SIGN HERE:

(1) Name under which business is conducted _____

(2) Signature (given and surname and character of partner) (Note: Signature must be made by a general partner)

_____

_____

(3) Place of Business _____
(Street and Number)
City and State _____

(4) Zip Code _____ Telephone No. _____

(5) E-Mail _____

IF A CORPORATION, SIGN HERE:

(1) Name under which business is conducted _____

_____

(2) _____
(Signature)

_____
(Title)

Impress Corporate Seal here

(3) Incorporated under the laws of the State of _____

(4) Place of Business _____
(Street and Number)

City and State _____

(5) Zip Code _____ Telephone No. _____

(6) E-Mail _____

NOTARIAL ACKNOWLEDGMENT OF EXECUTION BY ALL SIGNATORIES MUST BE ATTACHED

List below names of president, vice president, secretary and assistant secretary, if a corporation; if a partnership, list names of all general partners, and managing partners:

_____	_____
_____	_____
_____	_____
_____	_____
_____	_____
_____	_____
_____	_____
_____	_____

LISTING OF MANUFACTURERS
(To Accompany Proposal)

POINSETTIA LIFT STATION GENERATOR REPLACEMENT
CONTRACT NO. 3840-23

The Contractor shall submit this completed form with the bid to identify the products, equipment, or materials and their manufacturers proposed for use in the Work. If the Contractor elects to list products, equipment, or materials not listed in the Specifications, the Contractor shall provide substantiating data to demonstrate that the substitute products, equipment, or materials are of equal quality, durability, functional character, and efficiency as determined by the Engineer. Only one manufacturer shall be listed for each item.

Item or Material	Manufacturer
250 Kw Generator Set (Section 16205)	
Automatic and Manual Transfer Switches (Section16250)	

Substitutions for products, equipment, or materials listed above shall be allowed only if submitted for approval at least two weeks prior to the Bid Due Date or, for products, equipment, or materials not listed above, in accordance with Article 4-1.6 of the General Provisions and within 35 calendar days following Contract award.

BID SECURITY FORM

(Check to Accompany Bid)

POINSETTIA LIFT STATION GENERATOR REPLACEMENT
CONTRACT NO. 3840-23

(NOTE: The following form shall be used if check accompanies bid.)

Accompanying this proposal is a *Certified *Cashier's check payable to the order of City of Carlsbad, in the sum of_____ dollars ($_____), this amount being ten percent (10%) of the total amount of the bid. The proceeds of this check shall become the property of the City provided this proposal shall be accepted by the City through action of its legally constituted contracting authorities and the undersigned shall fail to execute a contract and furnish the required Performance, Warranty and Payment Bonds and proof of insurance coverage within the stipulated time; otherwise, the check shall be returned to the undersigned. The proceeds of this check shall also become the property of the City if the undersigned shall withdraw his or her bid within the period of fifteen (15) days after the date set for the opening thereof, unless otherwise required by law, and notwithstanding the award of the contract to another bidder.

_____

_____
BIDDER

*Delete the inapplicable word.

(NOTE: If the Bidder desires to use a bond instead of check, the Bid Bond form on the following pages shall be executed--the sum of this bond shall be not less than ten percent (10%) of the total amount of the bid.)

BIDDER'S BOND TO ACCOMPANY PROPOSAL

POINSETTIA LIFT STATION GENERATOR REPLACEMENT
CONTRACT NO. 3840-23

KNOW ALL PERSONS BY THESE PRESENTS:

That we, _____, as Principal, and _____, as Surety are held and firmly bound unto the City of Carlsbad, California, in an amount as follows: (must be at least ten percent (10%) of the bid amount) _____ for which payment, well and truly made, we bind ourselves, our heirs, executors and administrators, successors or assigns, jointly and severally, firmly by these presents.

THE CONDITION OF THE FOREGOING OBLIGATION IS SUCH that if the proposal of the above-bounden Principal for:

POINSETTIA LIFT STATION GENERATOR REPLACEMENT
CONTRACT NO. 3840-23

in the City of Carlsbad, is accepted by the City Council, and if the Principal shall duly enter into and execute a Contract including required bonds and insurance policies within twenty (20) days from the date of award of Contract by the City Council of the City of Carlsbad, being duly notified of said award, then this obligation shall become null and void; otherwise, it shall be and remain in full force and effect, and the amount specified herein shall be forfeited to the said City. In the event Principal executed this bond as an individual, it is agreed that the death of Principal shall not exonerate the Surety from its obligations under this bond.

SIGNED AND SEALED, this _____ day of _____, 20_____

_____(SEAL) _____(SEAL)
(Principal) (Surety)

By: _____ By: _____
(Signature) (Signature)

_____ _____
(Print Name/Title) (Print Name/Title)

(SEAL AND NOTARIAL ACKNOWLEDGEMENT OF SURETY – ATTACH ATTORNEY-IN-FACT CERTIFICATE)

APPROVED AS TO FORM:

CINDIE K. McMAHON
City Attorney

By: _____
Assistant City Attorney

GUIDE FOR COMPLETING
THE "DESIGNATION OF SUBCONTRACTORS" FORM

REFERENCES Prior to preparation of the following "Subcontractor Disclosure Form" Bidders are urged to review the definitions in section 1-2 of the General Provisions to this Contract, especially, "Bid", "Bidder", "Contract", "Contractor", "Contract Price", "Contract Unit Price", "Engineer", "Own Organization", "Subcontractor", and "Work". Bidders are further urged to review sections 2-3 SUBCONTRACTS of the General Provisions.

CAUTIONS This form will be used by the Agency to determine the percentage of work that the Bidder proposes to perform. Bidders are cautioned that failure to provide complete and correct information may result in rejection of the bid as non-responsive. Any bid that proposes performance of more than 50 percent of the work by subcontractors or otherwise to be performed by forces other than the Bidder's own organization will be rejected as non-responsive. Specialty items of work that may be so designated by the Engineer on the "Contractor's Proposal" are not included in computing the percentage of work proposed to be performed by the Bidder.

INSTRUCTIONS The Bidder shall set forth the name and location of business of each and every subcontractor whom the Bidder proposes to perform work or labor or render service in or about the work or improvement, and every subcontractor licensed as a contractor by the State of California whom the Bidder proposes to specially fabricate and install any portion of the work or improvement according to detailed drawings contained in the plans and specifications in excess of one-half of one percent (0.5%) of the Bidder's total bid or, in the case of bids or offers for the construction of streets and highways, including bridges, in excess of one-half of one percent (0.5%) or ten thousand dollars ($10,000) whichever is greater. Said name(s) and location(s) of business of subcontractor(s) shall be set forth and included as an integral part of the bid offer.

The Designation of Subcontractors form must be submitted as a part of the Bidder's sealed bid. Failure to provide complete and correct information may result in rejection of the bid as non-responsive.

Suppliers of materials from sources outside the limits of work are not subcontractors. The value of materials and transport of materials from sources outside the limits of work, as shown on the plans, shall be assigned to the Contractor or the Subcontractor as the case may be, that the Bidder proposes as installer of said materials. The value of material incorporated in any Subcontractor-installed bid item that is supplied by the Bidder shall be included as a part of the work that the Bidder proposes to be performed by the Subcontractor installing said item.

When a Subcontractor has a Carlsbad business license, the number must be entered on the proper form. If the Subcontractor does not have a valid business license, enter "NONE" in the appropriate space.

When the Bidder proposes using a Subcontractor to construct or install less than 100 percent of a bid item, the Bidder shall attach an explanation sheet to the Designation of Subcontractor form. The explanation sheet shall clearly apprise the City of the specific facts that show the Bidder proposes to perform no less than fifty percent (50%) of the work with its own forces.

Determination of the subcontract amounts for purposes of award of the contract shall be determined by the City Council in conformance with the provisions of the contract documents and the various supplemental provisions. The decision of the City Council shall be final.

Contractor is prohibited from performing any work on this project with a subcontractor who is ineligible to perform work on a public works project pursuant to Labor Code Sections 1771.1 or 1777.7.

Bidders shall make any additional copies of the disclosure forms as may be necessary to provide the required information. The page number and total number of additional form pages shall be entered in the location provided on each type of form so duplicated.

DESIGNATION OF SUBCONTRACTOR AND AMOUNT OF SUBCONTRACTOR'S BID ITEMS

(To Accompany Proposal)

POINSETTIA LIFT STATION GENERATOR REPLACEMENT
CONTRACT NO. 3840-23

The Bidder certifies that it has used the sub-bid of the following listed subcontractors in preparing this bid for the Work and that the listed subcontractors will be used to perform the portions of the Work as designated in this list in accordance with applicable provisions of the specifications and section 4100 et seq. of the Public Contract Code, "Subletting and Subcontracting Fair Practices Act." The Bidder further certifies that no additional subcontractor will be allowed to perform any portion of the Work in excess of one-half of one percent (0.5%) of the Bidder's total bid, or in the case of bids or offers for construction of streets and highways, including bridges, in excess of one-half of one percent (0.5%) or ten thousand dollars ($10,000), whichever is greater, and that no changes in the subcontractors listed work will be made except upon the prior approval of the Agency.

SUBCONTRACTOR'S BID ITEMS

Portion of Work	Subcontractor Name and Location of Business	Phone No. and Email Address	DIR Registration No.	Subcontractor's License No. and Classification*	Amount of Work by Subcontractor in Dollars*

Page _____ of _____ pages of this Subcontractor Designation form

* Pursuant to section 4104 (a)(3)(A) California Public Contract Code, receipt of the information preceded by an asterisk may be submitted by the Bidder up to 24 hours after the deadline for submitting bids contained in the "Notice Inviting Bids."

BIDDER'S STATEMENT OF TECHNICAL ABILITY AND EXPERIENCE

(To Accompany Proposal)

POINSETTIA LIFT STATION GENERATOR REPLACEMENT
CONTRACT NO. 3840-23

The Bidder is required to state what work of a similar character to that included in the proposed Contract he/she has successfully performed and give references, with telephone numbers, which will enable the City to judge his/her responsibility, experience and skill. An attachment can be used.

The bidder shall demonstrate at least five years of experience successfully completing **at least five projects involving diesel fueled generator installations** with a value of $100,000 or greater and similar in type and size to the Work of the proposed Contract. Bidder must also submit the qualifications of its Representatives in accordance with Section 7-6. The proposal shall be deemed non-responsive if the required technical ability and experience for the Bidder or its representative is not demonstrated.

Date Contract Completed	Name and Address of the Employer	Name and Phone No. of Person to Contract	Type of Work	Amount of Contract

BIDDER'S CERTIFICATE OF INSURANCE FOR GENERAL LIABILITY, EMPLOYERS' LIABILITY, AUTOMOTIVE LIABILITY AND WORKERS' COMPENSATION

(To Accompany Proposal)

POINSETTIA LIFT STATION GENERATOR REPLACEMENT
CONTRACT NO. 3840-23

As a required part of the Bidder's proposal the Bidder must attach either of the following to this page.

1) Certificates of insurance showing conformance with the requirements herein for each of:

   ☐ Comprehensive General Liability

   ☐ Automobile Liability

   ☐ Workers Compensation

   ☐ Employer's Liability

2) Statement with an insurance carrier's notarized signature stating that the carrier can, and upon payment of fees and/or premiums by the Bidder, will issue to the Bidder Policies of insurance for Comprehensive General Liability, Automobile Liability, Workers Compensation and Employer's Liability in conformance with the requirements herein and Certificates of insurance to the Agency showing conformance with the requirements herein.

All certificates of insurance and statements of willingness to issue insurance for auto policies offered to meet the specification of this contract must:

1) Meet the conditions stated in The Notice Inviting Bids and the General Provisions for this project for each insurance company that the Contractor proposes.

2) Cover <u>any vehicle</u> used in the performance of the contract, used onsite or offsite, whether owned, non-owned or hired, and whether scheduled or non-scheduled.

BIDDER'S STATEMENT RE DEBARMENT

(To Accompany Proposal)

POINSETTIA LIFT STATION GENERATOR REPLACEMENT
CONTRACT NO. 3840-23

1) Have you or any of your subcontractors ever been debarred as an irresponsible bidder by another jurisdiction in the State of California?

_____ yes _____ no

2) If yes, what was/were the name(s) of the agency(ies) and what was/were the period(s) of debarment(s)? Attach additional copies of this page to accommodate more than two debarments.

_____	_____
party debarred	party debarred
_____	_____
agency	agency
_____	_____
period of debarment	period of debarment

BY CONTRACTOR:

_____
(name of Contractor)

By: _____
(sign here)

_____
(print name/title)

Page _____ of _____ pages of this Re Debarment form

BIDDER'S DISCLOSURE OF DISCIPLINE RECORD

(To Accompany Proposal)

POINSETTIA LIFT STATION GENERATOR REPLACEMENT
CONTRACT NO. 3840-23

Contractors are required by law to be licensed and regulated by the Contractors' State License Board which has jurisdiction to investigate complaints against contractors if a complaint regarding a patent act or omission is filed within four years of the date of the alleged violation. A complaint regarding a latent act or omission pertaining to structural defects must be filed within 10 years of the date of the alleged violation. Any questions concerning a contractor may be referred to the Registrar, Contractors' State License Board, P.O. Box 26000, Sacramento, California 95826.

1) Have you ever had your contractor's license suspended or revoked by the California Contractors' State License Board two or more times within an eight year period?

   _____ yes _____ no

2) Has the suspension or revocation of your contractor's license ever been stayed?

   _____ yes _____ no

3) Have any subcontractors that you propose to perform any portion of the Work ever had their contractor's license suspended or revoked by the California Contractors' State License Board two or more times within an eight year period?

   _____ yes _____ no

4) Has the suspension or revocation of the license of any subcontractor's that you propose to perform any portion of the Work ever been stayed?

   _____ yes _____ no

5) If the answer to either of 1. or 3. above is yes fully identify, in each and every case, the party disciplined, the date of and violation that the disciplinary action pertains to, describe the nature of the violation and the disciplinary action taken therefore.

_____

_____

_____

_____

(If needed attach additional sheets to provide full disclosure.)

Page _____ of _____ pages of this Disclosure of Discipline form

BIDDER'S DISCLOSURE OF DISCIPLINE RECORD

(CONTINUED)

(To Accompany Proposal)

POINSETTIA LIFT STATION GENERATOR REPLACEMENT
CONTRACT NO. 3840-23

6) If the answer to either of 2. or 4. above is yes fully identify, in each and every case, the party whose discipline was stayed, the date of the violation that the disciplinary action pertains to, describe the nature of the violation and the condition (if any) upon which the disciplinary action was stayed.

_____

_____

_____

_____

_____

_____

_____

_____

_____

_____

_____

_____

_____

_____

(If needed attach additional sheets to provide full disclosure.)

BY CONTRACTOR:

_____
(name of Contractor)

By: _____
(sign here)

_____
(print name/title)

Page _____ of _____ pages of this Disclosure of Discipline form

NONCOLLUSION DECLARATION TO BE EXECUTED BY BIDDER AND SUBMITTED WITH BID

PUBLIC CONTRACT CODE SECTION 7106

POINSETTIA LIFT STATION GENERATOR REPLACEMENT
CONTRACT NO. 3840-23

The undersigned declares:

I am the _____ of _____, the party making the foregoing bid.

The bid is not made in the interest of, or on behalf of, any undisclosed person, partnership, company, association, organization, or corporation. The bid is genuine and not collusive or sham. The bidder has not directly or indirectly induced or solicited any other bidder to put in a false or sham bid. The bidder has not directly or indirectly colluded, conspired, connived, or agreed with any bidder or anyone else to put in a sham bid, or to refrain from bidding. The bidder has not in any manner, directly or indirectly, sought by agreement, communication, or conference with anyone to fix the bid price of the bidder or any other bidder, or to fix any overhead, profit, or cost element of the bid price, or of that of any other bidder. All statements contained in the bid are true. The bidder has not, directly or indirectly, submitted his or her bid price or any breakdown thereof, or the contents thereof, or divulged information or data relative thereto, to any corporation, partnership, company, association, organization, bid depository, or to any member or agent thereof, to effectuate a collusive or sham bid, and has not paid, and will not pay, any person or entity for such purpose.

Any person executing this declaration on behalf of a bidder that is a corporation, partnership, joint venture, limited liability company, limited liability partnership, or any other entity, hereby represents that he or she has full power to execute, and does execute, this declaration on behalf of the bidder.

I declare under penalty of perjury under the laws of the State of California that the foregoing is true and correct and that this declaration is executed on _____, 20____ at _____ [city], _____ [state].

_____
Signature of Bidder

CONTRACT
PUBLIC WORKS

This agreement is made this _____ day of _____, 2024, by and between the City of Carlsbad, California, a municipal corporation, (hereinafter called "City"), and _____ whose principal place of business is _____ (hereinafter called "Contractor").

City and Contractor agree as follows:

1. Description of Work. Contractor shall perform all work specified in the Contract documents for:

POINSETTIA LIFT STATION GENERATOR REPLACEMENT
CONTRACT NO. 3840-23

(hereinafter called "project")

2. Provisions of Labor and Materials. Contractor shall provide all labor, materials, tools, equipment, and personnel to perform the work specified by the Contract Documents.

3. Contract Documents. The Contract Documents consist of this Contract, Notice Inviting Bids, Contractor's Proposal, Bidder's Bond, Noncollusion Declaration, Designation of Subcontractors, Technical Ability and Experience, Bidder's Statement Re Debarment, Escrow Agreement, Release Form, the Plans and Specifications, the General Provisions, addendum(s) to said Plans and Specifications and General Provisions, and all proper amendments and changes made thereto in accordance with this Contract or the Plans and Specifications, and all bonds for the project; all of which are incorporated herein by this reference.

Contractor, her/his subcontractors, and materials suppliers shall provide and install the work as indicated, specified, and implied by the Contract Documents. Any items of work not indicated or specified, but which are essential to the completion of the work, shall be provided at the Contractor's expense to fulfill the intent of said documents. In all instances through the life of the Contract, the City will be the interpreter of the intent of the Contract Documents, and the City's decision relative to said intent will be final and binding. Failure of the Contractor to apprise subcontractors and materials suppliers of this condition of the Contract will not relieve responsibility of compliance.

4. Payment. For all compensation for Contractor's performance of work under this Contract, City shall make payment to the Contractor per section 9-3 PAYMENT of the General Provisions section of this contract. The Engineer will close the estimate of work completed for progress payments on the last working day of each month. The City shall withhold retention as required by Public Contract Code Section 9203.

5. Independent Investigation. Contractor has made an independent investigation of the jobsite, the soil conditions at the jobsite, and all other conditions that might affect the progress of the work and is aware of those conditions. The Contract price includes payment for all work that may be done by Contractor, whether anticipated or not, in order to overcome underground conditions. Any information that may have been furnished to Contractor by City about underground conditions or other job conditions is for Contractor's convenience only, and City

does not warrant that the conditions are as thus indicated. Contractor is satisfied with all job conditions, including underground conditions and has not relied on information furnished by City.

6. Hazardous Waste or Other Unusual Conditions. If the contract involves digging trenches or other excavations that extend deeper than four feet below the surface Contractor shall promptly, and before the following conditions are disturbed, notify City, in writing, of any:

A. Hazardous Waste. Material that Contractor believes may be material that is hazardous waste, as defined in section 25117 of the Health and Safety Code, that is required to be removed to a Class I, Class II, or Class III disposal site in accordance with provisions of existing law.

B. Differing Conditions. Subsurface or latent physical conditions at the site differing from those indicated.

C. Unknown Physical Conditions. Unknown physical conditions at the site of any unusual nature, different materially from those ordinarily encountered and generally recognized as inherent in work of the character provided for in the contract.

City shall promptly investigate the conditions, and if it finds that the conditions do materially so differ, or do involve hazardous waste, and cause a decrease or increase in contractor's costs of, or the time required for, performance of any part of the work shall issue a change order under the procedures described in this contract.

In the event that a dispute arises between City and Contractor whether the conditions materially differ, or involve hazardous waste, or cause a decrease or increase in the contractor's cost of, or time required for, performance of any part of the work, contractor shall not be excused from any scheduled completion date provided for by the contract, but shall proceed with all work to be performed under the contract. Contractor shall retain any and all rights provided either by contract or by law which pertain to the resolution of disputes and protests between the contracting parties.

7. Immigration Reform and Control Act. Contractor certifies it is aware of the requirements of the Immigration Reform and Control Act of 1986 (8 USC sections 1101-1525) and has complied and will comply with these requirements, including, but not limited to, verifying the eligibility for employment of all agents, employees, subcontractors, and consultants that are included in this Contract.

8. Prevailing Wage. Pursuant to the California Labor Code, the director of the Department of Industrial Relations has determined the general prevailing rate of per diem wages in accordance with California Labor Code, section 1773 and a copy of a schedule of said general prevailing wage rates is on file in the office of the City Engineer and is incorporated by reference herein. Pursuant to California Labor Code, section 1775, Contractor shall pay prevailing wages. Contractor shall post copies of all applicable prevailing wages on the job site. Contractor shall comply with California Labor Code, section 1776, which generally requires keeping accurate payroll records, verifying and certifying payroll records, and making them available for inspection. Contractor shall require all subcontractors to comply with Section 1776.

9. Indemnification. Contractor shall assume the defense of, pay all expenses of defense, and indemnify and hold harmless the City, and its officers and employees, from all claims, loss,

damage, injury and liability of every kind, nature and description, directly or indirectly arising from or in connection with the performance of the Contract or work; or from any failure or alleged failure of Contractor to comply with any applicable law, rules or regulations including those relating to safety and health; and from any and all claims, loss, damages, injury and liability, howsoever the same may be caused, resulting directly or indirectly from the nature of the work covered by the Contract, except for loss or damage caused by the sole or active negligence or willful misconduct of the City. The expenses of defense include all costs and expenses including attorneys' fees for litigation, arbitration, or other dispute resolution method.

Contractor shall also defend and indemnify the City against any challenges to the award of the contract to Contractor, and Contractor will pay all costs, including defense costs for the City. Defense costs include the cost of separate counsel for City, if City requests separate counsel.

Contractor shall also defend and indemnify the City against any challenges to the award of the contract to Contractor, arising in whole or in part from alleged inaccuracies or misrepresentation by the Contractor, whether intentional or otherwise, and Contractor will pay all costs, including defense costs for the City. Defense costs include the cost of separate counsel for City, if City requests separate counsel.

10. Insurance. Contractor shall procure and maintain for the duration of the contract insurance against claims for injuries to persons or damage to property which may arise from or in connection with the performance of the work hereunder by the Contractor, his or her agents, representatives, employees or subcontractors. Said insurance shall meet the City of Carlsbad's policy for insurance as stated in City Council Policy # 70.

(A) Coverages and Limits Contractor shall maintain the types of coverages and minimum limits indicted herein:

a. **Commercial General Liability (GLC) Insurance**: Insurance written on an "occurrence" basis, including products-completed operations, personal & advertising injury, with limits no less than **$2,000,000** per occurrence. If a general aggregate limit applies, either the general aggregate limit shall apply separately to this project/location or the general aggregate limit shall be twice the required occurrence limit.

b. **Business Automobile Liability Insurance**: $2,000,000 combined single limit per accident for bodily injury and property damage. In addition, the auto policy must cover any vehicle used in the performance of the contract, used onsite or offsite, whether owned, non-owned or hired, and whether scheduled or non-scheduled.

c. **Workers' Compensation and Employers' Liability Insurance:** Workers' compensation limits as required by the Labor Code of the State of California and Employers' Liability limits of $1,000,000 per incident. Workers' compensation offered by the State Compensation Insurance Fund is acceptable to the City.

(B) Additional Provisions: Contractor shall ensure that the policies of insurance required under this agreement with the exception of Workers' Compensation and Business Automobile Liability Insurance contain, or are endorsed to contain, the following provisions.

a. The City, its officials, employees and volunteers are to be covered as additional insured as respects: liability arising out of activities performed by or on behalf of the Contractor; products and completed operations of the contractor; premises owned, leased, hired or

borrowed by the contractor. The coverage shall contain no special limitations on the scope of protection afforded to the City, its officials, employees or volunteers. All additional insured endorsements must be evidenced using separate documents attached to the certificate of insurance; one for each company affording general liability, and employers' liability coverage.

b. The Contractor's insurance coverage shall be primary insurance as respects the City, its officials, employees and volunteers. Any insurance or self-insurance maintained by the City, its officials, employees or volunteers shall be in excess of the contractor's insurance and shall not contribute with it.

c. Any failure to comply with reporting provisions of the policies shall not affect coverage provided to the City, its officials, employees or volunteers.

d. Coverage shall state that the contractor's insurance shall apply separately to each insured against whom claim is made or suit is brought, except with respect to the limits of the insurer's liability.

(C) Notice of Cancellation. Each insurance policy required by this agreement shall be endorsed to state that coverage shall not be nonrenewed, suspended, voided, canceled, or reduced in coverage or limits except after ten (10) days' prior written notice has been sent to the City by certified mail, return receipt requested.

(D) Deductibles and Self-Insured Retention (S.I.R.) Levels. Any deductibles or self-insured retention levels must be declared to and approved by the City. At the option of the City, either: the insurer shall reduce or eliminate such deductibles or self-insured retention levels as respects the City, its officials and employees; or the contractor shall procure a bond guaranteeing payment of losses and related investigation, claim administration and defense expenses.

(E) Waiver of Subrogation. All policies of insurance required under this agreement shall contain a waiver of all rights of subrogation the insurer may have or may acquire against the City or any of its officials or employees.

(F) Subcontractors. Contractor shall include all subcontractors as insured under its policies or shall furnish separate certificates and endorsements for each subcontractor. Coverages for subcontractors shall be subject to all of the requirements stated herein.

(G) Acceptability of Insurers. Insurance is to be placed with insurers that have a rating in Best's Key Rating Guide of at least A-:VII. Insurers must also be authorized to transact the business of insurance by the State of California Insurance Commissioner as admitted carriers as evidenced by a listing in the official publication of the Department of Insurance of the State of California and/or under the standards specified by City Council Policy # 70.

(H) Verification of Coverage. Contractor shall furnish the City with certificates of insurance and original endorsements affecting coverage required by this clause. The certificates and endorsements for each insurance policy are to be signed by a person authorized by that insurer to bind coverage on its behalf. The certificates and endorsements are to be in forms approved by the City and are to be received and approved by the City before the Contract is executed by the City.

(I) Cost of Insurance. The Cost of all insurance required under this agreement shall be included in the Contractor's bid.

11. Claims and Lawsuits. All claims by Contractor shall be resolved in accordance with Public Contract Code section 9204, which is incorporated by reference. A copy of Section 9204 is included in Section 3 of the General Provisions. In addition, all claims by Contractor for $375,000 or less shall be resolved in accordance with the provisions in the Public Contract Code, Division 2, Part 3, Chapter 1, Article 1.5 (commencing with section 20104) which are incorporated by reference. A copy of Article 1.5 is included in Section 3 of the General Provisions. In the event of a conflict between Section 9204 and Article 1.5, Section 9204 shall apply. Notwithstanding the provisions of this section of the contract, all claims shall comply with the Government Tort Claim Act (section 900 et seq., of the California Government Code) for any claim or cause of action for money or damages prior to filing any lawsuit for breach of this agreement.

(A) Assertion of Claims. Contractor hereby agrees that any contract claim submitted to the City must be asserted as part of the contract process as set forth in this agreement and not in anticipation of litigation or in conjunction with litigation.

(B) False Claims. Contractor acknowledges that if a false claim is submitted to the City, it may be considered fraud and the Contractor may be subject to criminal prosecution.

(C) Government Code. Contractor acknowledges that California Government Code sections 12650 et seq., the False Claims Act, provides for civil penalties where a person knowingly submits a false claim to a public entity. These provisions include false claims made with deliberate ignorance of the false information or in reckless disregard of the truth or falsity of the information.

(D) Penalty Recovery. If the City of Carlsbad seeks to recover penalties pursuant to the False Claims Act, it is entitled to recover its litigation costs, including attorney's fees.

(E) Debarment for False Claims. Contractor hereby acknowledges that the filing of a false claim may subject the Contractor to an administrative debarment proceeding wherein the Contractor may be prevented from further bidding on public contracts for a period of up to five years.

(F) Carlsbad Municipal Code. The provisions of Carlsbad Municipal Code sections 3.32.025, 3.32.026, 3.32.027 and 3.32.028 pertaining to false claims are incorporated herein by reference.

(G) Debarment from Other Jurisdictions. Contractor hereby acknowledges that debarment by another jurisdiction is grounds for the City Council of the City of Carlsbad to disqualify the Contractor or subcontractor from participating in future contract bidding.

(H) Jurisdiction. Contractor agrees and hereby stipulates that the proper venue and jurisdiction for resolution of any disputes between the parties arising out of this agreement is San Diego County, California.

I have read and understand all provisions of Section 11 above. _____ init _____ init

12. Maintenance of Records. Contractor shall maintain and make available at no cost to the City, upon request, records in accordance with sections 1776 and 1812 of Part 7, Chapter 1, Article 2, of the Labor Code. If the Contractor does not maintain the records at Contractor's principal place of business as specified above, Contractor shall so inform the City by certified letter accompanying the return of this Contract. Contractor shall notify the City by certified mail of any change of address of such records.

13. Labor Code Provisions. The provisions of Part 7, Chapter 1, commencing with section 1720 of the Labor Code are incorporated herein by reference.

14. Security. Securities in the form of cash, cashier's check, or certified check may be substituted for any monies withheld by the City to secure performance of this contract for any obligation established by this contract. Any other security that is mutually agreed to by the Contractor and the City may be substituted for monies withheld to ensure performance under this Contract.

15. Unfair Business Practices. In entering into a public works contract or a subcontract to supply goods, services, or materials pursuant to a public works contract, the contractor or subcontractor offers and agrees to assign to the awarding body all rights, title, and interest in and to all causes of action it may have under Section 4 of the Clayton Act (15 U.S.C. Sec. 15) or under the Cartwright Act (Chapter 2 (commencing with Section 16700) of Part 2 of Division 7 of the Business and Professions Code), arising from purchases of goods, services, or materials pursuant to the public works contract or the subcontract. This assignment shall be made and become effective at the time the awarding body tenders final payment to the contractor, without further acknowledgment by the parties.

16. Provisions Required by Law Deemed Inserted. Each and every provision of law and clause required by law to be inserted in this Contract shall be deemed to be inserted herein and included herein, and if, through mistake or otherwise, any such provision is not inserted, or is not correctly inserted, then upon application of either party, the Contract shall forthwith be physically amended to make such insertion or correction.

17. Additional Provisions. Any additional provisions of this agreement are set forth in the "General Provisions" or "Supplemental Provisions" attached hereto and made a part hereof.

[signatures on the following page]

NOTARIAL ACKNOWLEDGMENT OF EXECUTION BY ALL SIGNATORIES MUST BE ATTACHED

(CORPORATE SEAL)

CONTRACTOR:

_____
(name of Contractor)

By: _____
(sign here)

_____
(print name and title)

By: _____
(sign here)

_____
(print name and title)

CITY OF CARLSBAD, a municipal corporation of the State of California

By: _____
KEITH BLACKBURN, Mayor

ATTEST:

_____
SHERRI FREISINGER, City Clerk

President or vice-president **and** secretary or assistant secretary must sign for corporations. If only one officer signs, the corporation must attach a resolution certified by the secretary or assistant secretary under the corporate seal empowering that officer to bind the corporation.

APPROVED AS TO FORM:

CINDIE K. McMAHON
City Attorney

By:_____
Assistant City Attorney

LABOR AND MATERIALS BOND

WHEREAS, the City Council of the City of Carlsbad located in the State of California has awarded to _____ (hereinafter designated as the "Principal"), a Contract for:

POINSETTIA LIFT STATION GENERATOR REPLACEMENT
CONTRACT NO. 3840-23

in the City of Carlsbad, in strict conformity with the drawings and specifications, and other Contract Documents now on file in the Office of the City Clerk of the City of Carlsbad and all of which are incorporated herein by this reference.

WHEREAS, Principal has executed or is about to execute said Contract and the terms thereof require the furnishing of a bond, providing that if Principal or any of their subcontractors shall fail to pay for any materials, provisions, provender or other supplies or teams used in, upon or about the performance of the work agreed to be done, or for any work or labor done thereon of any kind, the Surety on this bond will pay the same to the extent hereinafter set forth.

NOW, THEREFORE, WE, _____ as Principal, (hereinafter designated as the "Contractor"), and _____ as Surety, are held firmly bound unto the City of Carlsbad in the sum _____, said sum being an amount equal to: One hundred percent (100%) of the total amount payable under the terms of the contract by the City of Carlsbad, and for which payment well and truly to be made we bind ourselves, our heirs, executors and administrators, successors, or assigns, jointly and severally, firmly by these presents.

THE CONDITION OF THIS OBLIGATION IS SUCH that if the Contractor or his/her subcontractors fail to pay for any materials, provisions, provender, supplies, or teams used in, upon, for, or about the performance of the work contracted to be done, or for any other work or labor thereon of any kind, consistent with California Civil Code section 9100, or for amounts due under the Unemployment Insurance Code with respect to the work or labor performed under this Contract, or for any amounts required to be deducted, withheld, and paid over to the Employment Development Department from the wages of employees of the contractor and subcontractors pursuant to section 13020 of the Unemployment Insurance Code with respect to the work and labor**,** that the Surety will pay for the same, and, also, in case suit is brought upon the bond, reasonable attorney's fees, to be fixed by the court consistent with California Civil Code section 9554.

This bond shall inure to the benefit of any of the persons named in California Civil Code section 9100, so as to give a right of action to those persons or their assigns in any suit brought upon the bond.

Surety stipulates and agrees that no change, extension of time, alteration or addition to the terms of the Contract, or to the work to be performed hereunder or the specifications accompanying the same shall affect its obligations on this bond, and it does hereby waive notice of any change, extension of time, alterations or addition to the terms of the contract or to the work or to the specifications.

In the event that Contractor is an individual, it is agreed that the death of any such Contractor shall not exonerate the Surety from its obligations under this bond.

SIGNED AND SEALED, this _____ day of _____, 20____

_____(SEAL)
(Principal)

_____(SEAL)
(Surety)

By: _____
(Signature)

By: _____
(Signature)

_____
(Print Name & Title)

_____
(Print Name & Title)

(SEAL AND NOTARIAL ACKNOWLEDGEMENT OF SURETY – ATTACH ATTORNEY-IN-FACT CERTIFICATE)

APPROVED AS TO FORM:

CINDIE K. McMAHON
City Attorney

By: _____
Assistant City Attorney

FAITHFUL PERFORMANCE/WARRANTY BOND

WHEREAS, the City Council of the City of Carlsbad, State of California has awarded to _____ (hereinafter designated as the "Principal"), a Contract for:

POINSETTIA LIFT STATION GENERATOR REPLACEMENT
CONTRACT NO. 3840-23

in the City of Carlsbad, in strict conformity with the contract, the drawings and specifications, and other Contract Documents now on file in the Office of the City Clerk of the City of Carlsbad, all of which are incorporated herein by this reference.

WHEREAS, Principal has executed or is about to execute said Contract and the terms thereof require the furnishing of a bond for the faithful performance and warranty of said Contract;

NOW, THEREFORE, WE, _____ as Principal, (hereinafter designated as the "Contractor"), and _____ as Surety, are held firmly bound unto the City of Carlsbad in the sum _____, said sum being an amount equal to: One hundred percent (100%) of the total amount payable under the terms of the contract by the City of Carlsbad, and for which payment well and truly to be made we bind ourselves, our heirs, executors and administrators, successors, or assigns, jointly and severally, firmly by these presents.

THE CONDITION OF THIS OBLIGATION IS SUCH that if the above bounden Contractor, their heirs, executors, administrators, successors or assigns, shall in all things stand to and abide by, and well and truly keep and perform the covenants, conditions, and agreements in the Contract and any alteration thereof made as therein provided on their part, to be kept and performed at the time and in the manner therein specified, and in all respects according to their true intent and meaning, and shall indemnify and save harmless the City of Carlsbad, its officers, employees and agents, as therein stipulated, then this obligation shall become null and void; otherwise it shall remain in full force and effect.

As a part of the obligation secured hereby and in addition to the face amount specified therefore, there shall be included costs and reasonable expenses and fees, including reasonable attorney's fees, incurred by the City in successfully enforcing such obligation, all to be taxed as costs and included in any judgment rendered.

Surety stipulates and agrees that no change, extension of time, alteration or addition to the terms of the Contract, or to the work to be performed there under or the specifications accompanying the same shall affect its obligations on this bond, and it does hereby waive notice of any change, extension of time, alterations or addition to the terms of the contract or to the work or to the specifications.

In the event that Contractor is an individual, it is agreed that the death of any such Contractor shall not exonerate the Surety from its obligations under this bond.

SIGNED AND SEALED, this _____ day of _____, 20____

_____(SEAL)
(Principal)

_____(SEAL)
(Surety)

By: _____
(Signature)

By: _____
(Signature)

_____
(Print Name & Title)

_____
(Print Name & Title)

(SEAL AND NOTARIAL ACKNOWLEDGEMENT OF SURETY – ATTACH ATTORNEY-IN-FACT CERTIFICATE)

APPROVED AS TO FORM:

CINDIE K. McMAHON
City Attorney

By: _____
Assistant City Attorney

OPTIONAL ESCROW AGREEMENT FOR SECURITY DEPOSITS IN LIEU OF RETENTION

This Escrow Agreement is made and entered into by and between the City of Carlsbad whose address is 1200 Carlsbad Village Drive, Carlsbad, California, 92008, hereinafter called "City" and _____, whose address is _____ hereinafter called "Contractor" and _____, whose address is _____ hereinafter called "Escrow Agent."

For the consideration hereinafter set forth, the City, Contractor and Escrow Agent agree as follows:

1. Pursuant to section 22300 of the Public Contract Code of the State of California, the Contractor has the option to deposit securities with the Escrow Agent as a substitute for retention earnings required to be withheld by the City pursuant to the Construction Contract entered into between the City and Contractor for

POINSETTIA LIFT STATION GENERATOR REPLACEMENT
CONTRACT NO. 3840-23

in the amount of _____ dated _____ (hereinafter referred to as the "Contract"). Alternatively, on written request of the Contractor, the City shall make payments of the retention earnings directly to the Escrow Agent. When the Contractor deposits the securities as a substitute for Contract earnings, the Escrow Agent shall notify the City within 10 days of the deposit. The market value of the securities at the time of the substitution shall be a least equal to the cash amount then required to be withheld as retention under the terms of the contract between the City and Contractor. Securities shall be held in the name of the City and shall designate the Contractor as the beneficial owner.

2. The City shall make progress payments to the Contractor for such funds which otherwise would be withheld from progress payments pursuant to the Contract provisions, provided that the Escrow Agent holds securities in the form and amount specified above.

3. When the City makes payment of retentions earned directly to the Escrow Agent, the Escrow Agent shall hold them for the benefit of the Contractor until such time as the escrow created under this contract is terminated. The Contractor may direct the investment of the payments into securities. All terms and conditions of this agreement and the rights and responsibilities of the parties shall be equally applicable and binding when the City pays the Escrow Agent directly.

4. The Contractor shall be responsible for paying all fees for the expenses incurred by the Escrow Agent in administering the Escrow Account and all expenses of the City. These expenses and payment terms shall be determined by the City, Contractor and Escrow Agent.

5. The interest earned on the securities or the money market accounts held in escrow and all interest earned on that interest shall be for the sole account of Contractor and shall be subject to withdrawal by Contractor at any time and from time to time without notice to the City.

6. Contractor shall have the right to withdraw all or any part of the principal in the Escrow Account only by written notice to Escrow Agent accompanied by written authorization from City to the Escrow Agent that City consents to the withdrawal of the amount sought to be withdrawn by Contractor.

7. The City shall have a right to draw upon the securities in the event of default by the Contractor. Upon seven days' written notice to the Escrow Agent from the City of the default, the Escrow Agent shall immediately convert the securities to cash and shall distribute the cash as instructed by the City.

8. Upon receipt of written notification from the City certifying that the Contract is final and complete and that the Contractor has complied with all requirements and procedures applicable to the Contract, the Escrow Agent shall release to Contractor all securities and interest on deposit less escrow fees and charges of the Escrow Account. The escrow shall be closed immediately upon disbursement of all moneys and securities on deposit and payments of fees and charges.

9. The Escrow Agent shall rely on the written notifications from the City and the Contractor pursuant to sections (1) to (8), inclusive, of this agreement and the City and Contractor shall hold Escrow Agent harmless from Escrow Agent's release, conversion and disbursement of the securities and interest as set forth above.

10. The names of the persons who are authorized to give written notices or to receive written notice on behalf of the City and on behalf of Contractor in connection with the foregoing, and exemplars of their respective signatures are as follows:

For City:

Title FINANCE DIRECTOR

Name _____

Signature _____

Address 1635 Faraday Avenue, Carlsbad, CA 92008

For Contractor:

Title _____

Name _____

Signature _____

Address _____

For Escrow Agent:

Title _____

Name _____

Signature _____

Address _____

At the time the Escrow Account is opened, the City and Contractor shall deliver to the Escrow Agent a fully executed counterpart of this Agreement.

IN WITNESS WHEREOF, the parties have executed this Agreement by their proper officers on the date first set forth above.

For City:

Title MAYOR

Name _____

Signature _____

Address 1200 Carlsbad Village Drive, Carlsbad, CA 92008

For Contractor:

Title _____

Name _____

Signature _____

Address _____

For Escrow Agent:

Title _____

Name _____

Signature _____

Address _____

GENERAL PROVISIONS
FOR
POINSETTIA LIFT STATION GENERATOR REPLACEMENT

CONTRACT NO. 3840-23

CITY OF CARLSBAD

BIDDERS ARE ADVISED THAT THIS SECTION REPLACES PART 1, GENERAL PROVISIONS, OF THE STANDARD SPECIFICATIONS FOR PUBLIC WORKS CONSTRUCTION

SECTION 1 -- TERMS, DEFINITIONS, ABBREVIATIONS, AND SYMBOLS

1-1 TERMS. Unless otherwise stated, the words *directed, required, permitted, ordered, instructed, designated, considered necessary, prescribed, approved, acceptable, satisfactory,* or words of like meaning, refer to actions, expressions, and prerogatives of the Engineer.

1-1.1 Reference to Drawings. Where words “shown”, “indicated”, “detailed”, “noted”, “scheduled”, or words of similar import are used, it shall be understood that reference is made to the plans accompanying these provisions, unless stated otherwise.

1-1.2 Directions. Where words “directed”, “designated”, “selected”, or words of similar import are used, it shall be understood that the direction, designation or selection of the Engineer is intended, unless stated otherwise. The word “required” and words of similar import shall be understood to mean “as required to properly complete the work as required and as approved by the Engineer,” unless stated otherwise.

1-1.3 Equals and Approvals. Where the words “equal”, “approved equal”, “equivalent”, and such words of similar import are used, it shall be understood such words are followed by the expression “in the opinion of the Engineer”, unless otherwise stated. Where the words “approved”, “approval”, “acceptance”, or words of similar import are used, it shall be understood that the approval, acceptance, or similar import of the Engineer is intended.

1-1.4 Perform. The word “perform” shall be understood to mean that the Contractor, at its expense, shall perform all operations, labor, tools and equipment, and further, including the furnishing and installing of materials that are indicated, specified or required to mean that the Contractor, at its expense, shall furnish and install the work, complete and in-place and ready to use, including furnishing of necessary labor, materials, tools, equipment, and transportation.

1-2 DEFINITIONS. The following words, or groups of words, shall be exclusively defined by the definitions assigned to them herein.

Addendum – Written or graphic instrument issued prior to the opening of Bids which clarifies, corrects, or changes the bidding or Contract Documents. The term Addendum shall include bulletins and all other types of written notices issued to potential bidders prior to opening of Bids.

Agency – The City of Carlsbad, California.

Agreement – See Contract.

Assessment Act Contract – A Contract financed by special assessments authorized under a State Act or procedural ordinance of a City or County.

Average Sound Level – The level, in decibels, of the mean-square A-weighted sound pressure during a stated time period, with reference to the square of the standard reference sound pressure of 20 micropascals. The "average sound level" is equivalent to the industry standard Leq. See Equivalent Continuous Sound Level.

Base – A layer of specified material of planned thickness placed immediately below the pavement or surfacing.

Bid – The offer or proposal of the Bidder submitted on the prescribed form setting forth the prices for the Work.

Bidder – Any individual, firm, partnership, corporation, or combination thereof, submitting a Bid for the Work, acting directly or through a duly authorized representative.

Board – The officer or body constituting the awarding authority of the Agency, which is the City Council for the City of Carlsbad or the Board of Directors of Carlsbad Municipal Water District.

Bond – Bid, performance, and payment bond or other instrument of security.

Caltrans – The State of California, Department of Transportation.

Cash Contract – A Contract financed by means other than special assessments.

Certificate of Compliance – A written document signed and submitted by a supplier or manufacturer that certifies that the material or assembled material supplied to the Work site conforms to the requirements of the Contract Documents.

Change Order – A written order to the Contractor signed by the Agency directing an addition, deletion, or revision in the Work, or an adjustment in the Contract Price or the Contract time issued after the effective date of the Contract. A Change Order may or may not also be signed by the Contractor.

Code – The terms *Government Code, Labor Code*, etc., refer to codes of the State of California.

Construction Manager– the Project Inspector's immediate supervisor and first level of appeal for informal dispute resolution.

Contract – The written agreement between the Agency and the Contractor covering the Work.

Contract Documents – Including but not limited to; the Contract, any Addendum (which pertain to the Contract Documents), Notice Inviting Bids, Instructions to Bidders; Bid (including documentation accompanying the Bid and any post-bid documentation submitted prior to the Notice of Award) when attached as an exhibit to the Contract, the Bonds, the General Provisions, permits, the Technical Specifications, the Supplemental Provisions, the Plans, Standard Plans, Standard Specifications, Reference Specifications, and all Modifications issued after the execution of the Contract.

Contractor – The individual, partnership, corporation, joint venture, or other legal entity having a Contract with the Agency to perform the Work. In the case of work being done under permit issued by the Agency, the permittee shall be constructed to be the Contractor. The term "prime contractor" shall mean Contractor.

Contract Time - The number of Working Days to complete the Work as specified in the Contract Documents.

Contract Price – The total amount of money for which the Contract is awarded.

Contract Unit Price – The amount stated in the Bid for a single unit of an item of work.

County Sealer – The Sealer of Weights and Measures of the county in which the Contract is let.

Critical Path – In the construction schedule, the sequence of activities that represents the longest path through the Project network of activities and the shortest possible Project duration.

Days – Days shall mean consecutive calendar's days unless otherwise specified.

Decibel – A unit for measuring the amplitude of sound, equal to 20 times the logarithm to the base 10 of the ratio of the pressure of the sound measured to the reference pressure, which is 20 micropascals.

Defective Work - Work that does not conform to the requirements of the Contract Documents.

Deputy City Engineer – The Engineering Manager of the Construction Management & Inspection Department, the Construction Manager's immediate supervisor and the Engineer's designated representative. The Deputy City Engineer is the second level of appeal for informal dispute resolution.

Dispute Board – Persons designated by the City Manager of the City of Carlsbad or Executive Manager of the Carlsbad Municipal Water District, to hear and advise the City Manager on claims submitted by the Contractor. The City Manager for the City of Carlsbad or the Executive Manager for the Carlsbad Municipal Water District is the last appeal level for informal dispute resolution.

Disputed Work – Work in which the Agency and the Contractor are in disagreement.

Electrolier – Street light assembly complete, including foundation, standard, luminaire arm, luminaire, etc.

Engineer – The City Engineer of the City of Carlsbad or his/her approved representative. The Engineer is the third level of appeal for informal dispute resolution.

Engineer of Record/Design Engineer – A registered professional engineer licensed in the State of California who is qualified to act as an agent of a project owner or to prepare plans for facilities to be accepted by the City of Carlsbad. The term includes persons licensed in the State of California as Civil Engineers or Structural Engineers.

Equivalent Continuous Sound Level (Leq) – The average sound level which, over a given period of time, has the same total energy as the fluctuating noise and is also known as the time-average sound level.

Extra Work – New or unforeseen work not covered by a Contract Unit Price or Stipulated Unit Price.

Float – The number of days by which an activity in the construction schedule may be delayed from either its earliest start date or earliest completion date without extending the Contract Time (total float). Total float belongs to the Project and to any Party to accommodate changes in the Work or to mitigate the effect of events which may delay completion.

Holiday – Holidays and the days observed are listed below. If a holiday falls on a Saturday, the holiday is observed on the preceding Friday. If the holiday falls on a Sunday, it is observed the following Monday. Unless specified otherwise in the Contract Documents or authorized by the Engineer, do not work on holidays.

New Year's Day	January 1
Martin Luther King Day	3rd Monday in January
Presidents' Day	3rd Monday in February
Memorial Day	Last Monday in May
Independence Day	July 4
Labor Day	1st Monday in September
Indigenous People's Day	2nd Monday in October
Veteran's Day	November 11
Thanksgiving Day	4th Thursday in November
Thanksgiving Friday	Day after Thanksgiving
Christmas Day	December 25

House Connection Sewer – A sewer, within a public street or right-of-way, proposed to connect any parcel, lot, or part of a lot with a mainline sewer.

House Sewer – A sewer, wholly within private property, proposed to connect any building to a house connection sewer.

Luminaire – The lamp housing including the optical and socket assemblies (and ballast if so specified).

Luminaire Arm – The structural member, bracket, or mast arm, which, mounted on the standard, supports the luminaire.

Minor Bid Item – a single contract item constituting less than 10 percent (10%) of the original Contract Price bid.

Modification – Includes Change Orders and Supplemental Agreements. A Modification may only be used after the effective date of the Contract.

Night Work – See Working Night.

Notice of Award – The written notice by the Agency to the successful Bidder stating that upon compliance by it with the required conditions, the Agency will execute the Contract.

Notice to Proceed – A written notice given by the Agency to the Contractor fixing the date on which the Contract time will start.

Own Organization - When used in Sections 2-3.1 and 2-3.2 – Employees of the Contractor who are hired, directed, supervised and paid by the Contractor to accomplish the completion of the Work. Further, such employees have their employment taxes, State disability insurance payments, State and Federal income taxes paid and administered, as applicable, by the Contractor. Further, “own organization” means construction equipment that the Contractor owns or leases and uses to accomplish the Work. Equipment that is owner operated or leased equipment with an operator is not part of the Contractor's Own Organization and will not be included for the purpose of compliance with Sections 2-3.1 and 2-3.2.

Person – Any individual, firm, association, partnership, corporation, trust, joint venture, or other legal entity.

Plans – The drawings, profiles, cross sections, working drawings, and supplemental drawings, or reproductions thereof, approved by the Engineer, which show the location, character, dimensions, or details of the Work.

Private Contract – Work subject to Agency inspection, control, and approval, involving private funds, not administered by the Agency.

Project Inspector – the Engineer’s designated representative for inspection, contract administration and first level for informal dispute resolution.

Proposal – See Bid.

Reference Specifications – Those bulletins, standards, rules, methods of analysis or test, codes, and specifications of other agencies, engineering societies, or industrial associations referred to in the Contract Documents. These refer to the latest edition, including amendments in effect and published at the time of advertising the project or issuing the permit, unless specifically referred to by edition, volume, or date.

Roadway – The portion of a street reserved for vehicular use.

Service Connection – Service connections are all or any portion of the conduit, cable, or duct, including meter, between a utility distribution line and an individual consumer.

Sewer – Any conduit intended for the reception and transfer of sewage and fluid industrial waste.

Shop Drawings – Drawings showing the details of manufactured or assembled products proposed to be incorporated into the Work.

Sound Level – The weighted sound pressure level obtained using a sound level meter and frequency weighting network as provided in the American National Standards Institute (ANSI) specifications for sound level meters. "Sound level" means the same as "noise level."

Special Provisions – Revisions to the Standard Specifications setting forth conditions and requirements peculiar to the Work.

Specifications – General Provisions, Standard Specifications, Technical Specifications, Reference Specifications, Supplemental Provisions, and specifications in Supplemental Agreements between the Contractor and the Board.

Standard – The shaft or pole used to support street lighting luminaire, traffic signal heads, mast arms, etc.

Standard Plans – Details of standard structures, devices, or instructions referred to on the Plans or in Specifications by title or number.

Standard Specifications – The Standard Specifications for Public Works Construction (SSPWC), the “Greenbook”.

State – State of California.

Stipulated Unit Price – Unit prices established by the Agency in the Contract Documents.

Storm Drain – Any conduit and appurtenances intended for the reception and transfer of storm water.

Street – Any road, highway, parkway, freeway, alley, walk, or way.

Subbase – A layer of specified material of planned thickness between a base and the subgrade.

Subcontractor – An individual, firm, or corporation having a direct contract with the Contractor or with any other Subcontractor for the performance of a part of the Work.

Subgrade – For roadways, that portion of the roadbed on which pavement, surfacing, base, subbase, or a layer of other material is placed. For structures, the soil prepared to support a structure.

Supervision – Supervision, where used to indicate supervision by the Engineer, shall mean the performance of obligations, and the exercise of rights, specifically imposed upon and granted to the Agency in becoming a party to the Contract. Except as specifically stated herein, supervision by the Agency shall not mean active and direct superintendence of details of the Work.

Supplemental Agreement – A written amendment of the Contract Documents signed by both parties.

Supplemental Provisions – See Special Provisions.

Surety – Any individual, firm, or corporation, bound with and for the Contractor for the acceptable performance, execution, and completion of the Work, and for the satisfaction of all obligations incurred.

Tonne – Also referred to as "metric ton". Represents a unit of measure in the International System of Units equal to 1,000 kilograms.

Utility – Tracks, overhead or underground wires, pipelines, conduits, ducts, or structures, sewers, or storm drains owned, operated, or maintained in or across a public right of way or easement.

Work – That which is proposed to be constructed or done under the Contract or permit, including the furnishing of all labor, materials, equipment, and services.

Working Drawings – Drawings showing the details not shown on the Plans which are required to be designed by the Contractor.

Working Night – A period of night-time work, allowed only on Sunday through Thursday, excluding holidays.

1-3 ABBREVIATIONS.

1-3.1 General. The abbreviation herein, together with others in general use, are applicable to these Standard Specifications and to project Plans or other Contract Documents.

All abbreviations and symbols used on Plans for structural steel construction shall conform to those given by the "Manual of Steel Construction" published by the American Institute of Steel Construction, Inc.

1-3.2 Common Usage

Abbreviation	Word or Words
ABAN	Abandon
ABAND	Abandoned
ABS	Acrylonitrile – butadiene – styrene
AC	Asphalt Concrete
ACP	Asbestos cement pipe
ACWS	Asphalt concrete wearing surface
ALT	Alternate
APTS	Apartment and Apartments
AMER STD	American Standard
AWG	American Wire Gage (nonferrous wire)
BC	Beginning of curve
BCR	Beginning of curb return
BDRY	Boundary
BF	Bottom of footing
BLDG	Building and Buildings
BM	Benchmark
BVC	Beginning of vertical curve
B/W	Back of wall
C/C	Center to center
CAB	Crushed aggregate base

Abbreviation	Word or Words
CAL/OSHA	California Occupational Safety and Health Administration
CalTrans	California Department of Transportation
CAP	Corrugated aluminum pipe
CB	Catch Basin
Cb	Curb
CBP	Catch Basin Connection Pipe
CBR	California Bearing Ratio
CCR	California Code of Regulations
CCTV	Closed Circuit TV
CES	Carlsbad Engineering Standards
CF	Curb face
CF	Cubic foot
C&G	Curb and gutter
CFR	Code of Federal Regulations
CFS	Cubic Feet per Second
CIP	Cast iron pipe
CIPP	Cast-in place pipe
CL	Clearance, center line
CLF	Chain link fence

CMB ..... Crushed miscellaneous base
CMC ..... Cement mortar-coated
CML ..... Cement mortar-lined
CMWD ..... Carlsbad Municipal Water District
CO ..... Cleanout (Sewer)
COL ..... Column
COMM ..... Commercial
CONC ..... Concrete
CONN ..... Connection
CONST ..... Construct, Construction
COORD ..... Coordinate
CSP ..... Corrugated steel pipe
CSD ..... Carlsbad Standard Drawings
CTB ..... Cement treated base
CV ..... Check valve
CY ..... Cubic yard
D ..... Load of pipe
dB ..... Decibels
DBL ..... Double
DF ..... Douglas fir
DIA ..... Diameter
DIP ..... Ductile iron pipe
DL ..... Dead load
DR ..... Dimension Ratio
DT ..... Drain Tile
DWG ..... Drawing
DWY ..... Driveway
DWY APPR ..... Driveway approach
E ..... Electric
EA ..... Each
EC ..... End of curve
ECR ..... End of curb return
EF ..... Each face
EG ..... Edge of gutter
EGL ..... Energy grade line
El ..... Elevation
ELC ..... Electrolier lighting conduit
ELT ..... Extra long ton
ENGR ..... Engineer, Engineering
EP ..... Edge of pavement
ESMT ..... Easement
ETB ..... Emulsion-treated base
EVC ..... End of vertical curb
EWA ..... Encina Wastewater Authority
EXC ..... Excavation
EXP JT ..... Expansion joint
EXST ..... Existing
F ..... Fahrenheit
F&C ..... Frame and cover
F&I ..... Furnish and install
FAB ..... Fabricate
FAS ..... Flashing arrow sign
FD ..... Floor drain
FDN ..... Foundation
FED SPEC ..... Federal Specification
FG ..... Finished grade
FH ..... Fire hydrant
FL ..... Flow line
FS ..... Finished surface
FT-LB ..... Foot-pound
FTG ..... Footing
FW ..... Face of wall
G ..... Gas
GA ..... Gauge
GAL ..... Gallon and Gallons
GALV ..... Galvanized
GAR ..... Garage and Garages
GIP ..... Galvanized iron pipe
GL ..... Ground line or grade line
GM ..... Gas meter
GNV ..... Ground Not Visible
GP ..... Guy pole
GPM ..... gallons per minute
GR ..... Grade
GRTG ..... Grating
GSP ..... Galvanized steel pipe
H ..... High or height
HB ..... Hose bib
HC ..... House connection
HDWL ..... Headwall
HGL ..... Hydraulic grade line
HORIZ ..... Horizontal
HP ..... Horsepower
HPG ..... High pressure gas
HPS ..... High pressure sodium (Light)
HYDR ..... Hydraulic
IE ..... Invert Elevation
ID ..... Inside diameter
INCL ..... Including
INSP ..... Inspection
INV ..... Invert
IP ..... Iron pipe
JC ..... Junction chamber
JCT ..... Junction
JS ..... Junction structure
JT ..... Joint
L ..... Length
LAB ..... Laboratory
LAT ..... Lateral
LB ..... Pound
LD ..... Local depression
LF ..... Linear foot
LH ..... Lamp hole
LL ..... Live load
LOL ..... Layout line
LONG ..... Longitudinal
LP ..... Lamp post
LPS ..... Low pressure sodium (Light)
LS ..... Lump sum
LTS ..... Lime treated soil
LWD ..... Leucadia Wastewater District
MAINT ..... Maintenance
MAX ..... Maximum
MCR ..... Middle of curb return
MEAS ..... Measure
MH ..... Manhole, maintenance hole
MIL SPEC ..... Military specification
MISC ..... Miscellaneous
MOD ..... Modified, modify
MON ..... Monument
MSL.. Mean Sea Level (Reg. Standard Drawing M-12)
MTBM ..... Microtunneling Boring Machine
MULT ..... Multiple
MUTCD ..... Manual on Uniform Traffic Control Devices
MVL ..... Mercury vapor light
NCTD ..... North County Transit District

NRCP ..... Nonreinforced concrete pipe
OBS ..... Obsolete
OC ..... On center
OD ..... Outside diameter
OE ..... Outer edge
OHE ..... Overhead Electric
OMWD ..... Olivenhain Municipal Water District
OPP ..... Opposite
ORIG ..... Original
PB ..... Pull box
PC ..... Point of curvature
PCC ..... Portland cement concrete or point of compound curvature
PCVC ..... Point of compound vertical curve
PE ..... Polyethylene
PI ..... Point of intersection
PL ..... Property line
PMB ..... Processed miscellaneous base
POC ..... Point on curve
POT ..... Point on tangent
PP ..... Power pole
PRC ..... Point of reverse curve
PRVC ..... Point of reverse vertical curve
PSI ..... Pounds per square inch
PT ..... Point of tangency
PVC ..... Polyvinyl chloride
PVMT ..... Pavement
PVT R/W ..... Private right-of-way
Q ..... Rate of flow in cubic feet per second
QUAD ..... Quadrangle, Quadrant
R ..... Radius
R&O ..... Rock and oil
R/W ..... Right-of-way
RA ..... Recycling agent
RAC ..... Recycled asphalt concrete
RAP ..... Reclaimed asphalt pavement
RBAC ..... Rubberized asphalt concrete
RC ..... Reinforced concrete
RCB ..... Reinforced concrete box
RCE ..... Registered civil engineer
RCP ..... Reinforced concrete pipe
RCV ..... Remote control valve
REF ..... Reference
REINF ..... Reinforced or reinforcement
RES ..... Reservoir
RGE ..... Registered geotechnical engineer
ROW ..... Right-of-Way
RR ..... Railroad
RSE ..... Registered structural engineer
RTE ..... Registered traffic engineer
S ..... Sewer or Slope, as applicable
SCCP ..... Steel cylinder concrete pipe
SD ..... Storm drain
SDNR ..... San Diego Northern Railway
SDR ..... Standard thermoplastic pipe dimension ratio (ratio of pipe O.D. to minimum wall thickness)
SDRSD ..... San Diego Regional Standard Drawings
SE ..... Sand Equivalent
SEC ..... Section
SF ..... Square foot
SFM ..... Sewer Force Main
SI ..... International System of Units (Metric)
SPEC ..... Specifications
SPPWC ..... Standard Plans for Public Works Construction
SSPWC ..... Standard Specifications for Public Works Construction
ST HWY ..... State highway
STA ..... Station
STD ..... Standard
STR ..... Straight
STR GR ..... Straight grade
STRUC ..... Structural/Structure
SW ..... Sidewalk
SWD ..... Sidewalk drain
SY ..... Square yard
T ..... Telephone
TAN ..... Tangent
TC ..... Top of curb
TEL ..... Telephone
TF ..... Top of footing
TOPO ..... Topography
TR ..... Tract
TRANS ..... Transition
TS ..... Traffic signal or transition structure
TSC ..... Traffic signal conduit
TSS ..... Traffic signal standard
TW ..... Top of wall
TYP ..... Typical
UE ..... Underground Electric
USA ..... Underground Service Alert
VAR ..... Varies, Variable
VB ..... Valve box
VC ..... Vertical curve
VCP ..... Vitrified clay pipe
VERT ..... Vertical
VOL ..... Volume
VWD ..... Vallecitos Water District
W ..... Water, Wider or Width, as applicable
WATCH ..... Work Area Traffic Control Handbook
WI ..... Wrought iron
WM ..... Water meter
WPJ ..... Weakened plane joint
XCONN ..... Cross connection
XSEC ..... Cross section

1-3.3 Institutions.

Abbreviation	Word or Words
AASHTO	American Association of State Highway and Transportation Officials
ACI	American Concrete Institute
AISC	American Institute of Steel Construction
ANSI	American National Standards Institute
AREA	American Railway Engineering Association
ASME	American Society of Mechanical Engineers
ASQ	American Society for Quality
ASTM	American Society for Testing and Materials
AWPA	American Wood Preservers Association
AWS	American Welding Society
AWWA	American Water Works Association
EEI	Edison Electric Institute
EIA	Electronic Industries Alliance
EPA	Environmental Protection Agency
ETL	Electrical Testing Laboratories
FCC	Federal Communications Commission
FHWA	Federal Highway Administration
GRI	Geosynthetic Research Institute
IEEE	Institute of Electrical and Electronics Engineers
IMSA	International Municipal Signal Association
ISSA	International Slurry Surfacing Association
ITE	Institute of Transportation Engineers
NCHRP	National Cooperative Highway Research Program
NEMA	National Electrical Manufacturers Association
NSF	National Science Foundation
OSHA	Occupational Safety and Health Administration
PPI	Plastics Pipe Institute
RUS	Rural Utilities Service
SAE	Society of Automotive Engineers
SSPC	Society for Protective Coatings
UL	Underwriters' Laboratories Inc.

1-4 UNITS OF MEASURE.

1-4.1 General. U.S. Standard Measures, also called U.S. Customary System, are the principal measurement system in these specifications. However, certain material specifications and test requirements contained herein use SI units specifically and conversions to U.S. Standard Measures may or may not have been included in these circumstances. When U.S. Standard Measures are not included in parenthesis, then the SI units shall control. S.I. units and U.S. Standard Measures in parenthesis may or may not be exactly equivalent.

Reference is also made to ASTM E 380 for definitions of various units of the SI system and a more extensive set of conversion factors.

1-4.2 Units of Measure and Their Abbreviations.

U.S. Customary Unit (Abbreviations)	(Equal To)	SI Unit (Abbreviations)
1 mil (=0.001 in)		25.4 micrometer (μm)
1 inch (in)		25.4 millimeter (mm)
1 inch (in)		2.54 centimeter (cm)
1 foot (ft)		0.3048 meter (m)
1 yard (yd)		0.9144 meter (m)
1 mile (mi)		1.6093 kilometer (km)
1 square foot (ft^2)		0.0929 square meter (m^2)
1 square yard (yd^2)		0.8361 square meter (m^2)
1 cubic foot (ft^3)		0.0283 cubic meter (m^3)
1 cubic yard (yd^3)		0.7646 cubic meter (m^3)
1 acre		0.4047 hectare (ha)
1 U.S. gallon (gal)		3.7854 Liter (L)
1 fluid ounce (fl. oz.)		29.5735 millileter (mL)
1 pound mass (lb) (avoirdupois)		0.4536 kilogram (kg)
1 ounce mass (oz)		0.02835 kilogram (kg)
1 Ton (=2000 lb avoirdupois)		0.9072 Tonne (= 907 kg)
1 Poise		0.1 pascal · second (Pa · s)
1 centistoke (cs)		1 square millimeters per second (mm^2/s)
1 pound force (lbf)		4.4482 Newton (N)
1 pounds per square inch (psi)		6.8948 Kilopascal (kPa)
1 pound force per foot (lbf/ft)		1.4594 Newton per meter (N/m)
1 foot-pound force (ft-lbf)		1.3558 Joules (J)
1 foot-pound force per second ([ft-lbf]/s)		1.3558 Watt (W)
1 part per million (ppm)		1 milligram/liter (mg/L)

Temperature Units and Abbreviations

Degree Fahrenheit (°F):	Degree Celsius (°C):
°F = (1.8 x °C) + 32	°C = (°F – 32)/1.8

SI Units (abbreviation) Commonly Used in Both Systems

1 Ampere (A)
1 Volt (V)
1 Candela (cd)
1 Lumen (lm)
1 second (s)

Common Metric Prefixes

kilo (k)	10^3
centi (c)	10^{-2}
milli (m)	10^{-3}
micro (μ)	10^{-6}
nano (n)	10^{-9}
pico (p)	10^{-12}

1-5 SYMBOLS.

Δ	Delta, the central angle or angle between tangents
∠	Angle
%	Percent
‘	Feet or minutes
“	Inches or seconds
#	Number
/	per or (between words)
°	Degree
PL	Property line
CL	Centerline
SL	Survey line or station line

SECTION 2 – SCOPE AND CONTROL OF WORK

2-1 AWARD AND EXECUTION OF CONTRACT. Award and execution of Contract will be as provided for in the Specifications, Instruction to Bidders, or Notice Inviting Bids.

2-2 ASSIGNMENT. No Contract or portion thereof may be assigned without consent of the board, except that the contractor may assign money due or which will accrue to it under the contract. If given written notice, such assignment will be recognized by the Board to the extent permitted by law. Any assignment of money shall be subject to all proper withholdings in favor of the Agency and to all deductions provided for in the Contract. All money withheld, whether assigned or not, shall be subject to being used by the Agency for completion of the work, should the Contractor be in default.

2-3 SUBCONTRACTS.

2-3.1 General. Each Bidder shall comply with the Chapter of the Public Contract Code including Sections 4100 through 4113. The following excerpts or summaries of some of the requirements of this Chapter are included below for information:

The Bidder shall set forth in the Bid, as provided in 4104:

> "(a) The name and location of the place of business of each subcontractor who will perform work or labor or render service to the prime contractor in or about the construction of the work or improvements, or a subcontractor licensed by the State of California who, under subcontract to the prime contractor, specially fabricates and installs a portion of the work or improvement according to detailed drawings contained in the plans and specifications, in an amount in excess of one-half of 1 percent of the prime contractor's total bid, or, in the case of bids or offers for the construction of streets or highways, including bridges, in excess of one-half of 1 percent of the prime contractor's total bid or ten thousand dollars ($10,000), whichever is greater."
>
> "(b) The portion of the work which will be done by each such subcontractor under this act. The prime contractor shall list only one subcontractor for each such portion as is defined by the prime contractor in his bid."

If the Contractor fails to specify a Subcontractor or specifies more than one Subcontractor for the same portion of the work to be performed under the Contract (in excess of one-half of 1 percent of the Contractor's total Bid), the Contractor shall be qualified to perform that portion itself, and shall perform that portion itself, except as otherwise provided in the Code.

As provided in Section 4107, no Contractor whose Bid is accepted shall substitute any person as Subcontractor in place of the Subcontractor listed in the original Bid, except for causes and by procedures established in Section 4107.5. This section provides procedures to correct a clerical error in the listing of a Subcontractor.

Section 4110 provides that a Contractor violating any of the provisions of the Chapter violates the Contract and the Board may exercise the option either to cancel the Contract or assess the Contractor a penalty in an amount of not more than 10 percent of the subcontract involved, after a public hearing.

Should the Contractor fail to adhere to the provisions requiring the Contractor to complete **50 percent** of the contract price with its own organization, the Agency may at its sole discretion elect to cancel the contract or deduct an amount equal to 10 percent of the value of the work performed in excess of **50 percent** of the contract price by other than the Contractor's own organization. The Board shall be the sole body for determination of a violation of these provisions. In any proceedings under this section, the prime contractor shall be entitled to a public hearing before the Board and shall be notified ten (10) days in advance of the time and location of said hearing. The determination of the Board shall be final.

2-3.2 Additional Responsibility. The Contractor shall give personal attention to the fulfillment of the Contract and shall keep the Work under its control.

The Contractor shall perform, with its own organization, Contract work amounting to at least 50 percent of the Contract Price except that any designated "Specialty Items" may be performed by subcontract, and the amount of any such "Specialty Items" so performed may be deducted from the Contract Price before computing the amount required to be performed by the Contractor with its own organization. "Specialty Items" will be identified by the Agency in the Bid or Proposal. Where an entire item is subcontracted, the value of work subcontracted will be based on the Contract Unit Price. When a portion of an item is subcontracted, the value of work subcontracted will be based on the estimated percentage of the Contract Unit Price. This will be determined from information submitted by the Contractor, and subject to approval by the Engineer.

Before the work of any Subcontractor is started, the Contractor shall submit to the Engineer for approval a written statement showing the work to be subcontracted giving the name and business of each Subcontractor and description and value of each portion of the work to be so subcontracted.

2-3.3 Status of Subcontractors. Subcontractors shall be considered employees of the Contractor, and the Contractor shall be responsible for their work.

2-4 CONTRACT BONDS. Before execution of the Contract, the Bidder shall file surety bonds with the Agency to be approved by the Board in the amounts and for the purposes noted below. Bonds issued by a surety, who is authorized to issue bonds in California, and whose bonding limitation shown in said circular is sufficient to provide bonds in the amount required by the Contract shall be deemed to be approved unless specifically rejected by the Agency. Bonds from all other sureties shall be accompanied by all of the documents enumerated in Code of Civil Procedure 995.660 (a). The Bidder shall pay all bond premiums, costs, and incidentals.

Before execution of the Contract, the Bidder shall file surety bonds with the Agency to be approved by the Board in the amounts and for the purposes noted below. Bonds issued by a surety, who is authorized to issue bonds in California, and whose bonding limitation shown in said circular is sufficient to provide bonds in the amount required by the Contract shall be deemed to be approved unless specifically rejected by the Agency. Bonds from all other sureties shall be accompanied by all of the documents enumerated in Code of Civil Procedure 995.660 (a). The Bidder shall pay all bond premiums, costs, and incidentals.

Each bond shall incorporate, by reference, the Contract and be signed by both the Bidder and Surety and the signature of the authorized agent of the Surety shall be notarized.

The Contractor shall provide a faithful performance/warranty bond and payment bond (labor and materials bond) for this contract. The faithful performance/warranty bond shall be in a sum not less than one hundred percent of the total amount payable by the terms of this contract. The Contractor shall provide bonds to secure payment of laborers and materials suppliers in a sum not less than one hundred percent of the total amount payable by the terms of this contract.

Both bonds shall extend in full force and effect and be retained by the Agency during this project until they are released according to the provisions of this section.

The faithful performance/warranty bond will be reduced to 25 percent of the original amount 30 days after recordation of the Notice of Completion and will remain in full force and effect for the one-year warranty period and until all warranty repairs are completed to the satisfaction of the Engineer. The bonds to secure payment of laborers and materials suppliers shall be released six months plus 30 days after recordation of the Notice of Completion if all claims have been paid.

All bonds are to be placed with a surety insurance carrier admitted and authorized to transact the business of insurance in California and whose assets exceed their liabilities in an amount equal to or in excess of the amount of the bond. The bonds are to contain the following documents:

1. An original, or a certified copy, of the un-revoked appointment, power of attorney, by laws, or other instrument entitling or authorizing the person who executed the bond to do so.
2. A certified copy of the certificate of authority of the insurer issued by the insurance commissioner.

If the bid is accepted, the Agency may require a financial statement of the assets and liabilities of the insurer at the end of the quarter calendar year prior to 30 days next preceding the date of the execution of the bond. The financial statement shall be made by an officer's certificate as defined in Section 173 of the Corporations Code. In the case of a foreign insurer, the financial statement may be verified by the oath of the principal officer or manager residing within the United States.

Should any bond become insufficient, the Contractor shall renew the bond within 10 days after receiving notice from the Agency.

Should any Surety at any time be unsatisfactory to the Board, notice will be given the Contractor to that effect. No further payments shall be deemed due or will be made under the contract until a new Surety shall qualify and be accepted by the Board.

Changes in the Work or extensions of time, made pursuant to the Contract, shall in no way release the Contractor or Surety from its obligations. Notice of such changes or extensions shall be waived by the Surety.

2-5 PLANS AND SPECIFICATIONS.

2-5.1 General. The Contractor shall keep at the Work site a copy of the Plans and Specifications, to which the Engineer shall have access at all times.

The specifications for the work include the General Provisions, Supplemental Provisions, Project Technical Specifications, Carlsbad Engineering Standards (CES), Standard Specifications for Public Works Construction (SSPWC) and the latest supplements thereto,

2021 edition as published by the "Greenbook" Committee of Public Works Standards, Inc., hereinafter designated "SSPWC", as amended.

The Plans shall consist of the construction drawings, Drawing No. 540-9 issued under this Contract.

The Standard Drawings consist of the latest edition of the San Diego Area Regional Standard Drawings, hereinafter designated SDRSD, as issued by the San Diego County Department of Public Works, together with the most recent editions of the City of Carlsbad Engineering Standards and Carlsbad Standard Drawings, as issued by the City of Carlsbad and the Carlsbad Municipal Water District, hereinafter designated as CES and CSD, respectively. Modified standard drawings, if applicable, are enclosed in the appendices to these General Provisions.

The Plans, Specifications, and other Contract Documents shall govern the Work. The Contract Documents are intended to be complementary and cooperative. Anything specified in the Specifications and not shown on the Plans or shown on the Plans and not specified in the Specifications, shall be as though shown on or specified in both.

The Plans shall be supplemented by such working drawings and shop drawings as are necessary to adequately control the Work.

The Contractor shall ascertain the existence of any conditions affecting the cost of the Work through a reasonable examination of the Work site prior to submitting the Bid.

Existing improvements visible at the Work site, for which no specific disposition is made on the Plans, but which interfere with the completion of the Work, shall be removed and disposed of by the Contractor.

The Contractor shall, upon discovering any error or omission in the Plans or Specifications, immediately call it to the attention of the Engineer.

2-5.2 Precedence of Contract Documents.

If there is a conflict in the Contract Documents, the document highest in precedence shall control. The precedence shall be the most recent edition of the following documents listed in order of highest to lowest precedence:

1. Permits from other agencies as may be required by law.
2. Change orders, whichever occurs last.
3. Contract addenda, whichever occurs last.
4. Contract.
5. Carlsbad General and Supplemental Provisions.
6. Carlsbad Engineering Standards.
7. Technical Specifications.
8. Plans.
9. Standards Plans.
    a. City of Carlsbad Standard Drawings.
    b. City of Carlsbad Standard Drawings.
    c. City of Carlsbad modifications to the San Diego Area Regional Standard Drawings.
    d. San Diego Area Regional Standard Drawings.

e. Traffic Signal Design Guidelines and Standards.
f. State of California Department of Transportation Standard Plans.
g. State of California Department of Transportation Standard Specifications.
h. California Manual on Uniform Traffic Control Devices (CA MUTCD).

10. Standard Specifications for Public Works Construction, as amended.
11. Reference Specifications.
12. Manufacturer's Installation Recommendations

Detail drawings shall take precedence over general drawings.

Detailed plans and plan views shall have precedence over general plans.

2-5.2.1 Precedence of Caltrans Specifications. Where Caltrans specifications are used to modify the SSPWC or are added to the SSPWC by the Contract Documents, the Caltrans specifications shall have precedence only in reference to the materials referred to in the Caltrans specifications. The documents listed in Section 2-5.2 above, in their order of precedence above, shall prevail over the Caltrans specifications in all other matters.

2-5.3 Submittals.

2-5.3.1 General. Submittals shall be provided, at the Contractor's expense, as required in 2-5.3.2, 2-5.3.3 and 2-5.3.4, when required by the Plans or Special Provisions, or when requested by the Engineer.

One electronic (PDF) file shall be submitted. If revisions are required, the Engineer will return one redlined copy for resubmission. Upon acceptance, the Engineer will return one electronic copy to the Contractor.

Materials shall neither be furnished nor fabricated, nor shall any work for which submittals are required be performed, before the required submittals have been reviewed and accepted by the Engineer. Neither review nor acceptance of submittals by the Engineer shall relieve the Contractor from responsibility for errors, omissions, or deviations from the Contract Documents, unless such deviations were specifically called to the attention of the Engineer in the letter of transmittal. The Contractor shall be responsible for the correctness of the submittals.

The Contractor shall allow a minimum of 20 working days for review of submittals unless otherwise specified in the Special Provisions. Each submittal shall be accompanied by a letter of transmittal.

Each submittal shall be consecutively numbered. Resubmittals shall be labeled with the number of the original submittal followed by an ascending alphabetical designation (e.g. The label '4-C' would indicate the third instance that the fourth submittal had been given to the Engineer). Each sheet of each submittal shall be consecutively numbered. Each set of shop drawings and submittals shall be accompanied by a letter of transmittal on the Contractor's letterhead. The letter of transmittal shall contain the following:

1. Project title and Agency contract number.
2. Number of complete sets.
3. Contractor's certification statement.
4. Specification section number(s) pertaining to material submitted for review.

5. Submittal number (Submittal numbers shall be consecutive including subsequent submittals for the same materials.)
6. Description of the contents of the submittal.
7. Identification of deviations from the Contract Documents.
8. The signature, printed name, title and company name of the Contractor's representative.

The Contractor shall subscribe to and shall place the following certification on all submittals:

☐ "I hereby certify that the (equipment, material, procedure(s)) shown and marked in this submittal is that proposed to be incorporated into this Project, is in compliance with the Contract Documents, can be installed in the allocated spaces, and is submitted for approval."

Or

☐ "I hereby certify that the (equipment, material, procedure(s)) contained herein meet all requirements shown or specified in the Contract Documents, except for the following deviation(s): _____ _____."

2-5.3.2 Working Drawings. Working drawings are drawings showing details not shown on the Plans which are required to be designed by the Contractor. Working drawings shall be of a size and scale to clearly show all necessary details.

Working drawings are required in the following sections:

TABLE 2-5.3.2

Item	Section Number	Title	Subject
1	7-8.6.1	Dewatering	Excavation Dewatering
2	7-10.4.1	Safety Orders	Trench Shoring
3	7-10.4.8	Steel Plate Covers	Steel Plate Bridging
4	300-3.2	Cofferdams	Structure Excavation & Backfill
5	300-12.1	SWPPP	SWPPP
6	303-1.6.1	General	Falsework
7	303-1.7.1	General	Placing Reinforcement
8	303-3.1	General	Prestressed Concrete Construction
9	304-1.1.2	Falsework Plans	Structural Steel
10	307-1.1	General	Jacking Operations
11	307-2.1	General	Tunneling Operations
12	306-8	Microtunneling	Microtunneling Operations
13	601-2	Temporary Traffic Control Plan	Traffic Control
14	02690	Temporary Sewer Bypass Pumping	Sewer Bypassing

Working drawings listed above as Items 2, 3, 4, 7, 8, 9, 10, 11, 12, and 13 shall be prepared by a Civil or Structural Engineer registered by the State of California.

2-5.3.3 Shop Drawings. Shop drawings are drawings showing details of manufactured or assembled products proposed to be incorporated into the Work. Shop drawings are required in the following sections and as specified in the Special Provisions:

TABLE 2-5.3.3

Item	Section Number	Title	Subject
1	207-2.5	Joints	Reinforced Concrete Pipe
2	207-8.4	Joints	Vitrified Clay Pipe
3	304-1.1.1	Shop Drawings	Structural Steel
4	304-2.1	General	Metal Hand Railings

2-5.3.4 Supporting Information. Supporting information is information required by the Specifications for the purposes of administration of the Contract, analysis for verification of conformance with the Specifications, the operation and maintenance of a manufactured product or system to be constructed as part of the Work, and other information as may be required by the Engineer. Three hard copies and one electronic (PDF) file of the supporting information shall be submitted to the Engineer prior to the start of the Work unless otherwise specified in the Special Provisions or directed by the Engineer. Supporting information for systems shall be bound together and include all manufactured items for the system. If resubmittal is not required, one red lined copy will be returned to the Contractor. Supporting information shall consist of the following and is required unless otherwise specified in the Special Provisions:

1. List of Subcontractors per 2-3.2.
2. List of Materials per 4-1.4.
3. Certifications per 4-1.5.
4. Construction Schedule per 6-1 and Work Plan per 6-2.2.
5. Confined Space Entry Program per 7-10.4.4.
6. Concrete mix designs per 201-1.1.
7. Asphalt concrete mix designs per 203-6.1.
8. Controller Cabinet Wiring Diagrams per 701-17.2.2
9. Data, including, but not limited to, catalog sheets, manufacturer's brochures, technical bulletins, specifications, diagrams, product samples, and other information necessary to describe a system, product or item. This information is required for irrigation systems, street lighting systems, and traffic signals, and may also be required for any product, manufactured item, or system.
10. Temporary highline plan per Carlsbad Engineering Standards.

2-5.4 Record Drawings. The Contractor shall maintain a complete "as-built" record set of blue-line prints, which shall be corrected in red ink daily and show every change from the original drawings and specifications and the exact "as-built" locations, sizes and kinds of equipment, underground piping, conduits, valves, and all other work not visible at surface grade. Prints for this purpose may be obtained from the Agency at cost. The official record drawing shall accurately reflect all changes and modifications to the original plan. The Contractor shall formally submit the final record drawing at the final walk-through meeting. At the direction of the Engineer, the Contractor shall correct and revise the Record Drawings to accurately reflect field conditions. Re-submittal of the Record Drawings shall be completed within ten (10) working days of the final walk-through meeting date and shall reflect any additional punch list items. Payment for the upkeep, revision, and submittal of the record drawings shall be included in the lump sum price for mobilization.

2-6 WORK TO BE DONE. The Contractor shall perform all work necessary to complete the Contract in a satisfactory manner. Unless otherwise provided, the Contractor shall furnish all materials, equipment, tools, labor, and incidentals necessary to complete the Work.

2-7 SUBSURFACE DATA. All soil and test hole data, water table elevations, and soil or groundwater analyses shown on the drawings or included in the Specifications apply only at the location of the test holes and to the depths indicated. Soil test reports for test holes which have been drilled are available for inspection at the office of the Engineer.

The Contractor may make independent investigations of the project site, including evaluation of the soil or groundwater conditions and/or the presence of rock, in order to characterize the subsurface conditions that may be encountered to the Contractor's satisfaction. The costs for such investigations shall be considered included in the bid price and no additional compensation will be made therefor.

The indicated elevation of the water table is that which existed on the date when test hole data was determined. It is the Contractor's responsibility to determine and allow for the elevation of groundwater at the time of project construction. A difference in elevation between groundwater shown in soil boring logs and groundwater actually encountered during construction will not be considered as a basis for extra work.

2-8 RIGHT-OF-WAY. Rights-of-way, easements, or rights-of-entry for the Work, when indicated on the Plans, will be provided by the Agency. Unless otherwise provided, the Contractor shall make arrangements, pay for, and assume all responsibility for acquiring, using, and restoring additional work areas and removing and/or disposing of facilities temporarily required. The Contractor shall indemnify and hold the agency harmless from all claims for damages caused by such actions.

2-9 SURVEYING.

2-9.1 General. The Contractor will perform and be responsible for the accuracy of surveying adequate for construction. The Contractor shall set and preserve construction survey stakes and marks for the duration of their usefulness. If any construction survey stakes are lost or disturbed and need to be replaced, such replacement shall be performed at the expense of the Contractor.

The Contractor shall notify the Engineer in writing at least 2 Working Days before survey services in connection with the laying out of any portion of the Work. The Contractor shall set all stakes for line and grade.

Unless otherwise specified in the Special Provisions, stakes will be set and stationed for alignments for pipelines (sewers, storm drains, potable water, recycled water) and their appurtenances, curbs, headers, structures, rough grade, finish grade and right-of-way or easement boundaries. A corresponding cut or fill to finished grade (or flowline) will be indicated on a grade sheet.

2-9.2 Permanent Survey Markers. The Contractor shall not cover or disturb permanent survey monuments or benchmarks without the consent of the Engineer. Where the Engineer concurs, in writing, with the Contractor that protecting an existing monument in place is impractical, the Contractor shall employ a licensed land surveyor or a registered civil engineer authorized to practice land surveying within the State of California, hereinafter Surveyor, to establish the location of the monument before it is disturbed. The Contractor shall have the monument replaced by the Surveyor no later than thirty (30) days after construction at the site of the replacement is completed. The Surveyor shall file corner record(s) as required by §§ 8772 and 8773, et seq. of the California Business and Professions Code.

The Contractor shall have a Record of Survey prepared by the Surveyor and file it in conformance with §8700 - 8805 of the State of California Business and Professions Code when the Surveyor performs any surveying that such map is required under §8762 of the State of California Business and Professions Code and whenever the Surveyor shall establish, set or construct any permanent survey monument. SDRS Drawing No. M-10 type monuments, bolts, spikes, leaded tacks and nails (when set in concrete), iron pipes, reinforcing steel and all monuments and marks that are at, or accessory to, property corners and street centerlines are permanent survey monuments. The Record of Survey shall show all monuments set, control monuments used, the basis of bearings and all other data needed to determine the procedure of survey and the degree of accuracy attained by the field surveying including the unadjusted ratio of closure. The unadjusted ratio of closure shall not exceed 1 part in 40,000. The Record of Survey shall show the location and justification of location of all permanent monuments set and their relation to the street right-of-way. Record(s) of Survey(s) shall be submitted for the Engineer's review and approval before submittal to the County Surveyor and before submittal to the County Recorder.

When a change is made in the finished elevation of the pavement of any roadway in which a permanent survey monument is located, the Contractor shall adjust the monument frame and cover to the new grade within 7 days of paving unless the Engineer shall approve otherwise. Monument frames and covers shall be protected during street sealing or painting projects or be cleaned to the satisfaction of the Engineer.

2-9.3 Line and Grade. All work shall conform to the lines, elevations, and grades shown on the Plans.

Three consecutive points set on the same slope shall be used together so that any variation from a straight grade can be detected. Any such variation shall be reported to the Engineer. In the absence of such report, the Contractor shall be responsible for any error in the grade of the Work.

Grades for underground conduits will be set at the surface of the ground. The Contractor shall transfer them to the bottom of the trench.

2-9.4 Payment for Survey, Payment for survey work shall be included in the bid items requiring the survey work and no additional payment will be made. Extension of unit prices for extra work shall include full compensation for attendant survey work and no additional payment will be made. Payment for the replacement of disturbed monuments and the filing of records of survey and/or corner records, including filing fees, shall be incidental to the work necessitating the disturbance of said monuments and no additional payment will be made.

2-10 AUTHORITY OF BOARD AND ENGINEER. The Board has the final authority in all matters affecting the Work. Within the scope of the Contract, the Engineer has the authority to enforce compliance with the Plans and Specifications. The Contractor shall promptly comply with instructions from the Engineer or an authorized representative.

The decision of the Engineer is final and binding on all questions relating to: quantities; acceptability of material, equipment, or work; execution, progress or sequence of work; and interpretation of the Plans, Specifications, or other drawings. This shall be precedent to any payment under the Contract, unless otherwise ordered by the Board.

2-10.1 Availability of Records, The Contractor shall, at no charge to the Agency, provide copies of all records in the Contractor's or subcontractor's possession pertaining to the work that the Engineer may request.

2-10.2 Audit and Inspection, Contractor agrees to maintain and/or make available, to the Engineer, within San Diego County, accurate books and accounting records relative to all its activities and to contractually require all subcontractors to this Contract to do the same. The Engineer shall have the right to monitor, assess, and evaluate Contractor's and its subcontractors' performance pursuant to this Agreement, said monitoring, assessments, and evaluations to include, but not be limited to, audits, inspection of premises, reports, contracts, subcontracts and interviews of Contractor's staff and the staff of all subcontractors to this contract. At any time during normal business hours and as often as the Engineer may deem necessary, upon reasonable advance notice, Contractor shall make available to the Engineer for examination, all of its, and all subcontractors to this contract, records with respect to all matters covered by this Contract and will permit the Engineer to audit, examine, copy and make excerpts or transcripts from such data and records, and to make audits of all invoices, materials, payrolls, records of personnel, and other data relating to all matters covered by this Contract. However, any such activities shall be carried out in a manner so as to not unreasonably interfere with Contractor's ongoing business operations. Contractor and all subcontractors to this contract shall maintain such data and records for as long as may be required by applicable laws and regulations.

2-11 INSPECTION. The Work is subject to inspection and approval by the Engineer. The Contractor shall notify the Engineer before noon of the working day before inspection is required. Work shall be done only in the presence of the Engineer, unless otherwise authorized. Any work done without proper inspection will be subject to rejection. The Engineer and any authorized representatives shall at all times have access to the Work during its construction at shops and yards as well as the project site. The Contractor shall provide every reasonable facility for ascertaining that the materials and workmanship are in accordance with these Specifications. Inspection of the Work shall not relieve the Contractor of the obligation to fulfill all conditions of the Contract.

SECTION 3 – CHANGES IN WORK

3-1 CHANGES REQUESTED BY THE CONTRACTOR.

3-1.1 General. Changes in the Plans and Specifications, requested in writing by the Contractor, which do not materially affect the Work and which are not detrimental to the Work or to the interests of the Agency, may be granted by the Engineer. Nothing herein shall be construed as granting a right to the Contractor to demand acceptance of such changes.

3-1.2 Payment for Changes Requested by the Contractor. If such changes are granted, they shall be made at a reduction in cost or no additional cost to the Agency.

3-2 CHANGES INITIATED BY THE AGENCY.

3-2.1 General. The Agency may change the Plans, Specifications, character of the work, or quantity of work provided the total arithmetic dollar value of all such changes, both additive and deductive, does not exceed 25 percent of the Contract Price. Should it become necessary to exceed this limitation, the change shall be by written Supplemental Agreement between the Contractor and Agency, unless both parties agree to proceed with the change by Change Order.

Change Orders shall be in writing and state the dollar value of the change or established method of payment, any adjustment in contract time of completion, and when negotiated prices are involved, shall provide for the Contractor's signature indicating acceptance.

3-2.2 Payment.

3-2.2.1 Contract Unit Prices. If a change is ordered in an item of work covered by a Contract Unit Price, and such change does not involve substantial change in character of the work from that shown on the Plans or specified in the Specifications, then an adjustment in payment will be made. This adjustment will be based upon the increase or decrease in quantity and the Contract Unit Price.

If the actual quantity of an item of work covered by a Contract Unit Price and constructed in conformance with the Plans and Specifications varies from the Bid quantity by 50 percent or less, payment will be made at the Contract Unit Price. If the actual quantity of said item of work varies from the Bid quantity by more than 50 percent, payment will be made per Section 3-2.2.2 or 3-2.2.3 as appropriate.

If a change is ordered in an item of work covered by a Contract Unit Price, and such change does involve a substantial change in the character of the work from that shown on the Plans or specified in the Specifications, an adjustment in payment will be made per Section 3-2.4.

3-2.2.2 Increases of More Than 50 Percent. Should the actual quantity of an item of work covered by a Contract Unit Price and constructed in conformance with the Plans and Specifications, exceed the Bid quantity by more than 50 percent, payment for the quantity in excess of 150 percent of the Bid quantity will be made on the basis of an adjustment in the Contract Unit Price mutually agreed to by the Contractor and the Agency, or at the option of the Engineer, on the basis of Extra Work per Section 3-3. The Extra Work per Section 3-3, basis of payment, shall not include fixed costs. Fixed costs shall be deemed to have been recovered by the Contractor through payment for 150 percent of the Bid quantity at the Contract Unit Price.

3-2.2.3 Decreases of More Than 50 Percent. Should the actual quantity of an item of work covered by a Contract Unit Price, and constructed in conformance with the Plans and Specifications, be less than 50 percent of the Bid quantity, an adjustment in payment will not be made unless so requested in writing by the Contractor. If the Contractor so requests, payment will be made on the basis of an adjustment in the Contract Unit Price mutually agreed to by the Contractor and the Agency, or at the option of the Engineer, on the basis of Extra Work per Section 3-3; however, in no case will payment be less than would be made for the actual quantity at the Contract Unit Price nor more than would be made for 50 percent of the Bid quantity at the Contract Unit Price.

3-2.3 Stipulated Unit Prices. Stipulated Unit Prices are unit prices established by the Agency in the Contract Documents as distinguished from Contract Unit Prices submitted by the Contractor. Stipulated Unit Prices may be used for the adjustment of Contract changes when so specified in the Special Provisions.

3-2.4 Agreed Prices. Agreed Prices are prices for new or unforeseen work, or adjustments in Contract Unit Prices per Section 3-2.2, established by mutual agreement between the Contractor and the Agency. If mutual agreement cannot be reached, the Engineer may direct the Contractor to proceed on the basis of Extra Work in accordance per Section 3-3, except as otherwise specified in Sections 3-2.2.2 and 3-2.2.3.

3.2.4.1 Schedule of Values. Prior to construction, Contractor shall provide a schedule of values for all lump sum bid items that shall be used for the purpose of progress payments. The prices shall be valid for the purpose of change orders to the project.

3.2.5 Eliminated Items. Should any Bid item be eliminated in its entirety, payment will be made to the Contractor for its actual costs incurred in connection with the eliminated item prior to notification in writing from the Engineer so stating its elimination. If material conforming to the Plans and Specifications is ordered by the Contractor for use in the eliminated item prior to the date of notification of elimination by the Engineer, and if the order for that material cannot be canceled, payment will be made to the Contractor for the actual cost of the material. In this case, the material shall become the property of the Agency. Payment will be made to the Contractor for its actual costs for any further handling. If the material is returnable, the material shall be returned and payment will be made to the Contractor for the actual cost of charges made by the supplier for returning the material and for handling by the Contractor. Actual costs, as used herein, shall be computed on the basis of Extra Work per Section 3-3.

3-3 EXTRA WORK.

3-3.1 General. New or unforeseen work will be classified as “extra work” when the Engineer determines that it is not covered by Contract Unit Prices or stipulated unit prices.

3-3.2 Payment.

3-3.2.1 General. When the price for the extra work cannot be agreed upon, the Agency will pay for the extra work based on the accumulation of costs as provided herein.

3-3.2.2 Basis for Establishing Costs.

(a) **Labor.** The costs of labor will be the actual cost for wages of workers performing the extra work at the time the extra work is done, plus employer payments of payroll taxes, workers compensation insurance, liability insurance, health and welfare, pension, vacation, apprenticeship funds, and other direct costs, resulting from Federal, State, or local laws, as well as assessments or benefits required by lawful collective bargaining agreements.

The use of a labor classification which would increase the extra work cost will not be permitted unless the Contractor establishes the necessity for such additional costs. Labor costs for equipment operators and helpers shall be reported only when such costs are not included in the invoice for equipment rental. The labor cost for foremen shall be proportioned to all of their assigned work and only that applicable to extra work will be paid.

Nondirect labor costs, including superintendence, shall be considered part of the markup of Section 3-3.2.3 (a).

(b) **Materials.** The cost of materials reported shall be at invoice or lowest current price at which such materials are locally available and delivered to the job site in the quantities involved, plus sales tax, freight, and delivery.

The Agency reserves the right to approve materials and sources of supply, or to supply materials to the Contractor if necessary, for the progress of the Work. No markup shall be applied to any material provided by the Agency.

(c) **Tool and Equipment Rental.** No payment will be made for the use of tools which have a replacement value of $200 or less.

Regardless of ownership, the rates and right-of-way delay factors to be used in determining rental and delay costs shall be the edition of the, “Labor Surcharge and Equipment Rental Rates” published by Caltrans, current at the time of the actual use of the tool or equipment. The right-of-way delay factors therein shall be used as multipliers of the rental rates for determining the value of costs for delay to the Contractor and subcontractors, if any. The labor surcharge rates published therein are not a part of this contract.

The rental rates paid shall include the cost of fuel, oil, lubrication, supplies, small tools, necessary attachments, repairs and maintenance of any kind, depreciation, storage, insurance, and all incidentals. Necessary loading and transportation costs for equipment used on the extra work shall be included.

If equipment is used intermittently and, when not in use, could be returned to its rental source at less expense to the Agency than holding it at the Work site, it shall be returned, unless the Contractor elects to keep it at the Work site, at no expense to the Agency.

All equipment shall be acceptable to the Engineer, in good working condition, and suitable for the purpose for which it is to be used. Manufacturer’s ratings and approved modifications shall be used to classify equipment and it shall be powered by a unit of at least the minimum rating recommended by the manufacturer.

The reported rental time for equipment already at the Work site shall be the duration of its use on the extra work. This time begins when equipment is first put into actual operation on the extra work, plus the time required to move it from its previous site and back, or to a closer site.

(d) **Other Items.** The Agency may authorize other items which may be required on the extra work, including labor, services, material, and equipment. These items must be different in their nature from those required for the Work and be of a type not ordinarily available from the Contractor or Subcontractors.

Invoices covering all such items in detail shall be submitted with the request for payment.

(e) **Invoices.** Vendors' invoices for material, equipment rental and other expenditures shall be submitted with the request for payment. If the request for payment is not substantiated by invoices or other documentation, the Agency may establish the cost of the item involved at the lowest price which was current at the time of the report.

3-3.2.3 Markup.

(a) **Work by Contractor.** The following percentages shall be added to the Contractor's costs and shall constitute the markup for all overhead and profits:

1. Labor ……..… 20
2. Materials …….. 15
3. Equipment Rental ……. 15
4. Other Items and Expenditures .. 15

To the sum of the costs and markups provided for in this section, 1 percent shall be added as compensation for bonding.

(b) **Work by Subcontractor.** When all or any part of the extra work is performed by a Subcontractor, the markup established in Section 3-3.2.3(a) shall be applied to the Subcontractor's actual cost of such work. A markup of 10 percent on the first $5,000 of the subcontracted portion of the extra work and a markup of 5 percent on work added in excess of $5,000 of the subcontracted portion of the extra work may be added by the Contractor.

3-3.3 Daily Reports by Contractor. When the price for the extra work cannot be agreed upon, the Contractor shall submit a daily report to the Engineer on forms approved by the Agency. Included are applicable delivery tickets, listing all labor, materials, and equipment involved for that day, and other services and expenditures when authorized. Payment for extra work will not be made until such time that the Contractor submits completed daily reports and all supporting documents to the Engineer. Failure to submit the daily report by the close of the next working day may waive any rights for that day. An attempt shall be made to reconcile the report daily, and it shall be signed by the Engineer and the Contractor. In the event of disagreement, pertinent notes shall be entered by each party to explain points which cannot be resolved immediately. Each party shall retain a signed copy of the report. Reports by Subcontractors or others shall be submitted through the Contractor.

The report shall:

1. Show names of workers, classifications, and hours worked.
2. Describe and list quantities of materials used.

3. Show type of equipment, size, identification number, and hours of operation, including loading and transportation, if applicable.
4. Describe other services and expenditures in such detail as the Agency may require.

3-4 CHANGED CONDITIONS. The Contractor shall promptly notify the Engineer of the following work site conditions (hereinafter called changed conditions), in writing, upon their discovery and before they are disturbed:

1. Subsurface or latent physical conditions differing materially from those represented in the Contract Documents;
2. Unknown physical conditions of an unusual nature differing materially from those ordinarily encountered and generally recognized as inherent in work of the character being performed; and
3. Material differing from that represented in the Contract which the Contractor believes may be hazardous waste, as defined in Section 25117 of the Health and Safety Code, that is required to be removed to a Class I, Class II, or Class III disposal site in accordance with provisions of existing law.

The Engineer will promptly investigate conditions which appear to be changed conditions. If the Engineer determines that conditions are changed conditions and they will materially affect performance time, the Contractor, upon submitting a written request, will be granted an extension of time subject to the provisions of 6-6.

If the Engineer determines that the conditions do not justify an adjustment in compensation, the Contractor will be notified in writing. This notice will also advise the Contractor of its obligation to notify the Engineer in writing if the Contractor disagrees.

The Contractor's failure to give notice of changed conditions promptly upon their discovery and before they are disturbed shall constitute a waiver of all claims in connection therewith.

The Contractor shall not be entitled to the payment of any additional compensation for any act, or failure to act, by the Engineer, including failure or refusal to issue a change order, or for the happening of any event, thing, occurrence, or other cause, unless the Contractor shall have first given the Engineer due written notice of potential claim as hereinafter specified. Compliance with this section shall not be required as a prerequisite to notice provisions in Section 6-7.3 Contract Time Accounting, nor to any claim that is based on differences in measurement or errors of computation as to contract quantities. The written notice of potential claim for changed conditions shall be submitted by the Contractor to the Engineer upon their discovery and prior to the time that the Contractor performs the work giving rise to the potential claim. The Contractor's failure to give written notice of potential claim for changed conditions to the agency upon their discovery and before they are disturbed shall constitute a waiver of all claims in connection therewith.

The Contractor shall provide the City with a written document containing a description of the particular circumstances giving rise to the potential claim, the reasons for which the Contractor believes additional compensation may be due and nature of any and all costs involved within 20 working days of the date of service of the written notice of potential claim for changed conditions. Verbal notifications are disallowed.

The potential claim shall include the following certification relative to the California False Claims Act, Government Code Sections 12650-12655:

"The undersigned certifies that the above statements are made in full cognizance of the California False Claims Act, Government Code Sections 12650-12655. The undersigned further understands and agrees that this potential claim, unless resolved, must be restated as a claim in response to the City's proposed final estimate in order for it to be further considered."

By: _____ Title: _____

Date: _____

Company Name: _____

The Contractor's estimate of costs may be updated when actual costs are known. The Contractor shall submit substantiation of its actual costs to the Engineer within 20 working days after the affected work is completed. Failure to do so shall be sufficient cause for denial of any claim subsequently filed on the basis of said notice of potential claim.

It is the intention of this section that differences between the parties arising under and by virtue of the contract be brought to the attention of the Engineer at the earliest possible time in order that such matters be settled, if possible, or other appropriate action promptly taken.

3-5 DISPUTED WORK. The Contractor shall give the Agency written notice of potential claim prior to commencing any disputed work. Failure to give said notice shall constitute a waiver of all claims in connection therewith. If the Contractor and the Agency are unable to reach agreement on disputed work, the Agency may direct the Contractor to proceed with the Work.

Prior to proceeding with dispute resolution pursuant to Public Contract Code provisions specified hereinafter, the contractor shall attempt to resolve all disputes informally through the following dispute resolution chain of command:

1. Project Inspector
2. Construction Manager
3. Deputy City Engineer
4. City Engineer
5. City Manager

The Contractor shall submit a complete report within 20 working days after completion of the disputed work stating its position on the claim, the contractual basis for the claim, along with all documentation supporting the costs and all other evidentiary materials. At each level of claim or appeal of claim the City will, within 10 working days of receipt of said claim or appeal of claim, review the Contractor's report and respond with a position, request additional information or request that the Contractor meet and present its report. When additional information or a meeting is requested, the City will provide its position within 10 working days of receipt of said additional information or Contractor's presentation of its report. The Contractor may appeal each level's position up to the City Manager after which the Contractor may proceed under the provisions of the Public Contract Code.

The authority within the dispute resolution chain of command is limited to recommending a resolution to a claim to the City Manager. Actual approval of the claim is subject to the change order provisions in the contract.

All claims by the -Contractor shall be resolved in accordance with Public Contract Code section 9204, which is set forth below:

9204. (a) The Legislature finds and declares that it is in the best interests of the state and its citizens to ensure that all construction business performed on a public works project in the state that is complete and not in dispute is paid in full and in a timely manner.

(b) Notwithstanding any other law, including, but not limited to, Article 7.1 (commencing with Section 10240) of Chapter 1 of Part 2, Chapter 10 (commencing with Section 19100) of Part 2, and Article 1.5 (commencing with Section 20104) of Chapter 1 of Part 3, this section shall apply to any claim by a contractor in connection with a public works project.

(c) For purposes of this section:
(1) "Claim" means a separate demand by a contractor sent by registered mail or certified mail with return receipt requested, for one or more of the following:
(A) A time extension, including, without limitation, for relief from damages or penalties for delay assessed by a public entity under a contract for a public works project.
(B) Payment by the public entity of money or damages arising from work done by, or on behalf of, the contractor pursuant to the contract for a public works project and payment for which is not otherwise expressly provided or to which the claimant is not otherwise entitled.
(C) Payment of an amount that is disputed by the public entity.
(2) "Contractor" means any type of contractor within the meaning of Chapter 9 (commencing with Section 7000) of Division 3 of the Business and Professions Code who has entered into a direct contract with a public entity for a public works project.
(3) (A) "Public entity" means, without limitation, except as provided in subparagraph (B), a state agency, department, office, division, bureau, board, or commission, the California State University, the University of California, a city, including a charter city, county, including a charter county, city and county, including a charter city and county, district, special district, public authority, political subdivision, public corporation, or nonprofit transit corporation wholly owned by a public agency and formed to carry out the purposes of the public agency.
(B) "Public entity" shall not include the following:
(i) The Department of Water Resources as to any project under the jurisdiction of that department.
(ii) The Department of Transportation as to any project under the jurisdiction of that department.
(iii) The Department of Parks and Recreation as to any project under the jurisdiction of that department.
(iv) The Department of Corrections and Rehabilitation with respect to any project under its jurisdiction pursuant to Chapter 11 (commencing with Section 7000) of Title 7 of Part 3 of the Penal Code.
(v) The Military Department as to any project under the jurisdiction of that department.
(vi) The Department of General Services as to all other projects.
(vii) The High-Speed Rail Authority.
(4) "Public works project" means the erection, construction, alteration, repair, or improvement of any public structure, building, road, or other public improvement of any kind.
(5) "Subcontractor" means any type of contractor within the meaning of Chapter 9 (commencing with Section 7000) of Division 3 of the Business and Professions Code who either is in direct contract with a contractor or is a lower tier subcontractor.
(d) (1) (A) Upon receipt of a claim pursuant to this section, the public entity to which the claim applies shall conduct a reasonable review of the claim and, within a period not to exceed 45 days, shall provide the claimant a written statement identifying what portion of the claim is

disputed and what portion is undisputed. Upon receipt of a claim, a public entity and a contractor may, by mutual agreement, extend the time period provided in this subdivision.
(B) The claimant shall furnish reasonable documentation to support the claim.
(C) If the public entity needs approval from its governing body to provide the claimant a written statement identifying the disputed portion and the undisputed portion of the claim, and the governing body does not meet within the 45 days or within the mutually agreed to extension of time following receipt of a claim sent by registered mail or certified mail, return receipt requested, the public entity shall have up to three days following the next duly publicly noticed meeting of the governing body after the 45-day period, or extension, expires to provide the claimant a written statement identifying the disputed portion and the undisputed portion.
(D) Any payment due on an undisputed portion of the claim shall be processed and made within 60 days after the public entity issues its written statement. If the public entity fails to issue a written statement, paragraph (3) shall apply.
(2) (A) If the claimant disputes the public entity's written response, or if the public entity fails to respond to a claim issued pursuant to this section within the time prescribed, the claimant may demand in writing an informal conference to meet and confer for settlement of the issues in dispute. Upon receipt of a demand in writing sent by registered mail or certified mail, return receipt requested, the public entity shall schedule a meet and confer conference within 30 days for settlement of the dispute.
(B) Within 10 business days following the conclusion of the meet and confer conference, if the claim or any portion of the claim remains in dispute, the public entity shall provide the claimant a written statement identifying the portion of the claim that remains in dispute and the portion that is undisputed. Any payment due on an undisputed portion of the claim shall be processed and made within 60 days after the public entity issues its written statement. Any disputed portion of the claim, as identified by the contractor in writing, shall be submitted to nonbinding mediation, with the public entity and the claimant sharing the associated costs equally. The public entity and claimant shall mutually agree to a mediator within 10 business days after the disputed portion of the claim has been identified in writing. If the parties cannot agree upon a mediator, each party shall select a mediator and those mediators shall select a qualified neutral third party to mediate with regard to the disputed portion of the claim. Each party shall bear the fees and costs charged by its respective mediator in connection with the selection of the neutral mediator. If mediation is unsuccessful, the parts of the claim remaining in dispute shall be subject to applicable procedures outside this section.
(C) For purposes of this section, mediation includes any nonbinding process, including, but not limited to, neutral evaluation or a dispute review board, in which an independent third party or board assists the parties in dispute resolution through negotiation or by issuance of an evaluation. Any mediation utilized shall conform to the timeframes in this section.
(D) Unless otherwise agreed to by the public entity and the contractor in writing, the mediation conducted pursuant to this section shall excuse any further obligation under Section 20104.4 to mediate after litigation has been commenced.
(E) This section does not preclude a public entity from requiring arbitration of disputes under private arbitration or the Public Works Contract Arbitration Program, if mediation under this section does not resolve the parties' dispute.
(3) Failure by the public entity to respond to a claim from a contractor within the time periods described in this subdivision or to otherwise meet the time requirements of this section shall result in the claim being deemed rejected in its entirety. A claim that is denied by reason of the public entity's failure to have responded to a claim, or its failure to otherwise meet the time requirements of this section, shall not constitute an adverse finding with regard to the merits of the claim or the responsibility or qualifications of the claimant.
(4) Amounts not paid in a timely manner as required by this section shall bear interest at 7 percent per annum.

(5) If a subcontractor or a lower tier subcontractor lacks legal standing to assert a claim against a public entity because privity of contract does not exist, the contractor may present to the public entity a claim on behalf of a subcontractor or lower tier subcontractor. A subcontractor may request in writing, either on his or her own behalf or on behalf of a lower tier subcontractor, that the contractor present a claim for work which was performed by the subcontractor or by a lower tier subcontractor on behalf of the subcontractor. The subcontractor requesting that the claim be presented to the public entity shall furnish reasonable documentation to support the claim. Within 45 days of receipt of this written request, the contractor shall notify the subcontractor in writing as to whether the contractor presented the claim to the public entity and, if the original contractor did not present the claim, provide the subcontractor with a statement of the reasons for not having done so.

(e) The text of this section or a summary of it shall be set forth in the plans or specifications for any public works project that may give rise to a claim under this section.

(f) A waiver of the rights granted by this section is void and contrary to public policy, provided, however, that (1) upon receipt of a claim, the parties may mutually agree to waive, in writing, mediation and proceed directly to the commencement of a civil action or binding arbitration, as applicable; and (2) a public entity may prescribe reasonable change order, claim, and dispute resolution procedures and requirements in addition to the provisions of this section, so long as the contractual provisions do not conflict with or otherwise impair the timeframes and procedures set forth in this section.

(g) This section applies to contracts entered into on or after January 1, 2017.

(h) Nothing in this section shall impose liability upon a public entity that makes loans or grants available through a competitive application process, for the failure of an awardee to meet its contractual obligations.

(i) This section shall remain in effect only until January 1, 2020, and as of that date is repealed, unless a later enacted statute, that is enacted before January 1, 2020, deletes or extends that date.

In addition, all claims by Contractor for $375,000 or less shall be resolved in accordance with the procedures in the Public Contract Code, Division 2, Part 3, Chapter 1, Article 1.5 (commencing with Section 20104) which is set forth below.

ARTICLE 1.5 RESOLUTION OF CONSTRUCTION CLAIMS

20104. (a)(1) This article applies to all public works claims of three hundred seventy-five thousand dollars ($375,000) or less which arise between a contractor and a local agency.
(2) This article shall not apply to any claims resulting from a contract between a contractor and a public agency when the public agency has elected to resolve any disputes pursuant to Article 7.1 (commencing with Section 10240) of Chapter 1 of Part 2.
(b)(1) "Public work" has the same meaning as in Sections 3100 and 3106 of the Civil Code, except that "public work" does not include any work or improvement contracted for by the state or the Regents of the University of California.
(2) "Claim" means a separate demand by the contractor for (A) a time extension, (B) payment of money or damages arising from work done by, or on behalf of, the contractor pursuant to the contract for a public work and payment of which is not otherwise expressly provided for or the

claimant is not otherwise entitled to, or (C) an amount the payment of which is disputed by the local agency.
(c) The provisions of this article or a summary thereof shall be set forth in the plans or specifications for any work which may give rise to a claim under this article.
(d) This article applies only to contracts entered into on or after January 1, 1991.

20104.2. For any claim subject to this article, the following requirements apply:
(a) The claim shall be in writing and include the documents necessary to substantiate the claim. Claims must be filed on or before the date of final payment. Nothing in this subdivision is intended to extend the time limit or supersede notice requirements otherwise provided by contract for the filing of claims.
(b)(1) For claims of less than fifty thousand dollars ($50,000), the local agency shall respond in writing to any written claim within 45 days of receipt of the claim, or may request, in writing, within 30 days of receipt of the claim, any additional documentation supporting the claim or relating to defenses to the claim the local agency may have against the claimant.
(2) If additional information is thereafter required, it shall be requested and provided pursuant to this subdivision, upon mutual agreement of the local agency and the claimant.
(3) The local agency's written response to the claim, as further documented, shall be submitted to the claimant within 15 days after receipt of the further documentation or within a period of time no greater than that taken by the claimant in producing the additional information, whichever is greater.
(c)(1) For claims of over fifty thousand dollars ($50,000) and less than or equal to three hundred seventy-five thousand dollars ($375,000), the local agency shall respond in writing to all written claims within 60 days of receipt of the claim, or may request, in writing, within 30 days of receipt of the claim, any additional documentation supporting the claim or relating to defenses to the claim the local agency may have against the claimant.
(2) If additional information is thereafter required, it shall be requested and provided pursuant to this subdivision, upon mutual agreement of the local agency and the claimant.
(3) The local agency's written response to the claim, as further documented, shall be submitted to the claimant within 30 days after receipt of the further documentation, or within a period of time no greater than that taken by the claimant in producing the additional information or requested documentation, whichever is greater.
(d) If the claimant disputes the local agency's written response, or the local agency fails to respond within the time prescribed, the claimant may so notify the local agency, in writing, either within 15 days of receipt of the local agency's response or within 15 days of the local agency's failure to respond within the time prescribed, respectively, and demand an informal conference to meet and confer for settlement of the issues in dispute. Upon a demand, the local agency shall schedule a meet and confer conference within 30 days for settlement of the dispute.
(e) Following the meet and confer conference, if the claim or any portion remains in dispute, the claimant may file a claim as provided in Chapter 1 (commencing with Section 900) and Chapter 2 (commencing with Section 910) of Part 3 of Division 3.6 of Title 1 of the Government Code. For purposes of those provisions, the running of the period of time within which a claim must be filed shall be tolled from the time the claimant submits his or her written claim pursuant to subdivision (a) until the time that claim is denied as a result of the meet and confer process, including any period of time utilized by the meet and confer process.
(f) This article does not apply to tort claims and nothing in this article is intended nor shall be construed to change the time periods for filing tort claims or actions specified by Chapter 1 (commencing with Section 900) and Chapter 2 (commencing with Section 910) of Part 3 of Division 3.6 of Title 1 of the Government Code.

20104.4. The following procedures are established for all civil actions filed to resolve claims subject to this article:
(a) Within 60 days, but no earlier than 30 days, following the filing or responsive pleadings, the court shall submit the matter to non-binding mediation unless waived by mutual stipulation of both parties. The mediation process shall provide for the selection within 15 days by both parties of a disinterested third person as mediator, shall be commenced within 30 days of the submittal, and shall be concluded within 15 days from the commencement of the mediation unless a time requirement is extended upon a good cause showing to the court or by stipulation of both parties. If the parties fail to select a mediator within the 15-day period, any party may petition the court to appoint the mediator.
(b)(1) If the matter remains in dispute, the case shall be submitted to judicial arbitration pursuant to Chapter 2.5 (commencing with Section 1141.10) of Title 3 of Part 3 of the Code of Civil Procedure, notwithstanding Section 1141.11 of that code. The Civil Discovery Act of 1986 (Article 3 (commencing with Section 2016) of Chapter 3 of Title 3 of Part 4 of the Code of Civil procedure) shall apply to any proceeding brought under the subdivision consistent with the rules pertaining to judicial arbitration.
(2) Notwithstanding any other provision of law, upon stipulation of the parties, arbitrators appointed for purposes of this article shall be experienced in construction law, and, upon stipulation of the parties, mediators and arbitrators shall be paid necessary and reasonable hourly rates of pay not to exceed their customary rate, and such fees and expenses shall be paid equally by the parties, except in the case of arbitration where the arbitrator, for good cause, determines a different division. In no event shall these fees or expenses be paid by state or county funds.
(3) In addition to Chapter 2.5 (commencing with Section 1141.10) Title 3 of Part 3 of the Code of Civil Procedure, any party who after receiving an arbitration award requests a trial de novo but does not obtain a more favorable judgment shall, in addition to payment of costs and fees under that chapter, pay the attorney's fees of the other party arising out of the trial de novo.
(c) The court may, upon request by any party, order any witnesses to participate in the mediation or arbitration process.

20104.6. (a) No local agency shall fail to pay money as to any portion of a claim which is undisputed except as otherwise provided in the contract.
(b) In any suit filed under Section 20104.4, the local agency shall pay interest at the legal rate on any arbitration award or judgment. The interest shall begin to accrue on the date the suit is filed in a court of law.

Although not to be construed as proceeding under extra work provisions, the Contractor shall keep and furnish records of disputed work in accordance with Section 3-3.

SECTION 4 – CONTROL OF MATERIALS

4-1 MATERIALS AND WORKMANSHIP.

4-1.1. General. All materials, parts, and equipment furnished by the Contractor in the Work shall be new, high grade, and free from defects. Quality of work shall be in accordance with the generally accepted standards. Material and work quality shall be subject to the Engineer's approval.

Materials and work quality not conforming to the requirements of the Specifications shall be considered defective and will be subject to rejection. Defective work or material, whether in place or not, shall be removed immediately from the site by the Contractor, at its expense, when so directed by the Engineer.

If the Contractor fails to replace any defective or damaged work or material after reasonable notice, the Engineer may cause such work or materials to be replaced. The replacement expense will be deducted from the amount to be paid to the Contractor.

Used or secondhand materials, parts, and equipment may be used only if permitted by the Specifications.

4-1.2 Protection of Work and Materials. The Contractor shall provide and maintain storage facilities and employ such measures as will preserve the specified quality and fitness of materials to be used in the Work. Stored materials shall be reasonably accessible for inspection. The Contractor shall also adequately protect new and existing work and all items of equipment for the duration of the Contract.

The Contractor shall not, without the Agency's consent, assign, sell, mortgage, hypothecate, or remove equipment or materials which have been installed or delivered and which may be necessary for the completion of the Contract.

4-1.3 Inspection Requirements.

4-1.3.1 General. Unless otherwise specified, inspection is required at the source for such typical materials and fabricated items as bituminous paving mixtures, structural concrete, metal fabrication, metal casting, welding, concrete pipe manufacture, protective coating application, and similar shop or plant operations.

Steel pipe in sizes less than 6 inches and vitrified clay and cast-iron pipe in all sizes are acceptable upon certification as to compliance with the Specifications, subject to sampling and testing by the Agency. Standard items of equipment such as electric motors, conveyors, elevators, plumbing fixtures, etc., are subject to inspection at the job site only. Special items of equipment such as designed electrical panel boards, large pumps, sewage plant equipment, etc., are subject to inspection at the source, normally only for performance testing. The Specifications may require inspection at the source for other items not typical of those listed in this section.

The Contractor shall provide the Engineer free and safe access to any and all parts of work at any time. Such free and safe access shall include means of safe access and egress, ventilation, lighting, shoring, dewatering and all elements pertaining to the safety of persons as contained in

the State of California, California Code of Regulations, Title 8, Industrial Relations, Chapter 4, Division of Industrial Safety, Subchapter 4, Construction Safety Orders and such other safety regulations as may apply. Contractor shall furnish Engineer with such information as may be necessary to keep the Engineer fully informed regarding progress and manner of work and character of materials. Inspection or testing of the whole or any portion of the work or materials incorporated in the work shall not relieve Contractor from any obligation to fulfill this Contract.

4-1.3.2 Inspection of Materials Not Locally Produced. When the Contractor intends to purchase materials, fabricated products, or equipment from sources located more than 50 miles outside the geographical limits of the Agency, an inspector or accredited testing laboratory (approved by the Engineer), shall be engaged by the Contractor at its expense, to inspect the materials, equipment or process. This approval shall be obtained before producing any material or equipment. The inspector or representative of the testing laboratory shall judge the materials by the requirements of the Plans and Specifications. The Contractor shall forward reports required by the Engineer. No material or equipment shall be shipped nor shall any processing, fabrication or treatment of such materials be done without proper inspection by the approved agent. Approval by said agent shall not relieve the Contractor of responsibility for complying with the Contract requirements.

4-1.3.3 Inspection by the Agency. The Agency will provide all inspection and testing laboratory services within 50 miles of the geographical limits of the Agency. For private contracts, all costs of inspection at the source, including salaries and mileage costs, shall be paid by the permittee.

4-1.4 Test of Material. Before incorporation in the Work, the Contractor shall submit samples of materials, as the Engineer may require, at no cost to the Agency. The Contractor, at its expense, shall deliver the materials for testing to the place and at the time designated by the Engineer. Unless otherwise provided, all initial testing will be performed under the direction of the Engineer, and at no expense to the Contractor. If the Contractor is to provide and pay for testing, it will be stated in the Specifications. For private contracts, the testing expense shall be borne by the permittee.

The Contractor shall notify the Engineer in writing, at least 15 days in advance, of its intention to use materials for which tests are specified, to allow sufficient time to perform the tests. The notice shall name the proposed supplier and source of material.

If the notice of intent to use is sent before the materials are available for testing or inspection or is sent so far in advance that the materials on hand at the time will not last but will be replaced by a new lot prior to use on the Work, it will be the Contractor's responsibility to renotify the Engineer when samples which are representative may be obtained.

Except as specified in these Provisions, the Agency will bear the cost of testing of locally produced materials and/or on-site workmanship where the results of such tests meet or exceed the requirements indicated in the Standard Specifications, Technical Specification, and any Supplemental Provisions. The cost of all other tests shall be borne by the Contractor.

At the option of the Engineer, the source of supply of each of the materials shall be approved by the Engineer before the delivery is started. All materials proposed for use may be inspected or tested at any time during their preparation and use. If, after incorporating such materials into the Work, it is found that sources of supply that have been approved do not furnish a uniform product, or if the product from any source proves unacceptable at any time, the Contractor shall

furnish approved material from other approved sources. If any product proves unacceptable after improper storage, handling or for any other reason it shall be rejected, not incorporated into the work and shall be removed from the project site all at the Contractor's expense.

Compaction tests may be made by the Engineer and all costs for tests that meet or exceed the requirements of the specifications shall be borne by the Agency. Said tests may be made at any place along the work as deemed necessary by the Engineer. The costs of any retests made necessary by noncompliance with the specifications shall be borne by the Contractor.

4-1.5 Certification. The Engineer may waive materials testing requirements of the Specifications and accept the manufacturer's written certification that the materials to be supplied meet those requirements. Material test data may be required as part of the certification.

4-1.6 Trade Names or Equals. The Contractor may supply any of the materials specified or offer an equivalent. The Engineer shall determine whether the material offered is equivalent to that specified. Adequate time shall be allowed for the Engineer to make this determination.

Whenever any particular material, process, or equipment is indicated by patent, proprietary or brand name, or by name of manufacturer, such wording is used for the purpose of facilitating its description and shall be deemed to be followed by the words "**or equal"**. A listing of materials is not intended to be comprehensive, or in order of preference. The Contractor may offer any material, process, or equipment considered to be equivalent to that indicated. The substantiation of offers shall be submitted as provided in the Contract Documents.

The Contractor shall, at its expense, furnish data concerning items offered by it as equivalent to those specified. The Contractor shall have the material tested as required by the Engineer to determine that the quality, strength, physical, chemical, or other characteristics, including durability, finish, efficiency, dimensions, service, and suitability are such that the item will fulfill its intended function.

Test methods shall be subject to the approval of the Engineer. Test results shall be reported promptly to the Engineer, who will evaluate the results and determine if the substitute item is equivalent. The Engineer's findings shall be final. Installation and use of a substitute item shall not be made until approved by the Engineer.

If a substitute offered by the Contractor is not found to be equal to the specified material, the Contractor shall furnish and install the specified material.

The specified Contract completion time shall not be affected by any circumstance developing from the provisions of this section.

The Contractor is responsible for the satisfactory performance of substituted items. If, in the sole opinion of the Engineer, the substitution is determined to be unsatisfactory in performance, appearance, durability, compatibility with associated items, availability of repair parts and suitability of application the Contractor shall remove the substituted item and replace it with the originally specified item at no cost to the Agency.

4-1.7 Weighing and Metering Equipment. All scales and metering equipment used for proportioning materials shall be inspected for accuracy and certified within the past 12 months by the State of California Bureau of Weights and Measures, by the County Director or Sealer of Weights and Measures, or by a scale mechanic registered with or licensed by the County.

The accuracy of the work of a scale service agency, except as stated herein, shall meet the standards of the California Business and Professions Code and the California Code of Regulations pertaining to weighing devices. A certificate of compliance shall be presented, prior to operation, to the Engineer for approval and shall be renewed whenever required by the Engineer at no cost to the Agency.

All scales shall be arranged so they may be read easily from the operator's platform or area. They shall indicate the true net weight without the application of any factor. The figures of the scales shall be clearly legible. Scales shall be accurate to within 1 percent when tested with the plant shut down. Weighing equipment shall be so insulated against vibration or moving of other operating equipment in the plant area that the error in weighing with the entire plant running will not exceed 2 percent for any setting nor 1.5 percent for any batch.

4-1.8 Calibration of Testing Equipment. Testing equipment, such as, but not limited to pressure gages, metering devices, hydraulic systems, force (load) measuring instruments, and strain-measuring devices shall be calibrated by a testing agency acceptable to the Engineer at intervals not to exceed 12 months and following repairs, modification, or relocation of the equipment. Calibration certificates shall be provided when requested by the Engineer.

4-1.9 Construction Materials Dispute Resolution (Soils, Rock Materials, Concrete, Mortar and Related Materials, Masonry Materials, Bituminous Materials, Rock Products, and Modified Asphalts). In the interest of safety and public value, whenever credible evidence arises to contradict the test values of materials, the Agency and the Contractor will initiate an immediate and cooperative investigation. Test values of materials are results of the materials' tests, as defined by these Specifications or by the special provisions, required to accept the Work. Credible evidence is process observations or test values gathered using industry accepted practices. A contradiction exists whenever test values or process observations of the same or similar materials are diverse enough such that the work acceptance or performance becomes suspect. The investigation shall allow access to all test results, procedures, and facilities relevant to the disputed work and consider all available information and, when necessary, gather new and additional information in an attempt to determine the validity, the cause, and if necessary, the remedy to the contradiction. If the cooperative investigation reaches any resolution mechanism acceptable to both the Agency and the Contractor, the contradiction shall be considered resolved and the cooperative investigation concluded. Whenever the cooperative investigation is unable to reach resolution, the investigation may then either conclude without resolution or continue by written notification of one party to the other requesting the implementation of a resolution process by committee. The continuance of the investigation shall be contingent upon recipient's agreement and acknowledged in writing within 3 calendar days after receiving a request. Without acknowledgement, the investigation shall conclude without resolution. The committee shall consist of three State of California Registered Civil Engineers. Within 7 calendar days after the written request notification, the Agency and the Contractor will each select one engineer. Within 14 calendar days of the written request notification, the two selected engineers will select a third engineer. The goal in selection of the third member is to complement the professional experience of the first two engineers. Should the two engineers fail to select the third engineer, the Agency and the Contractor shall each propose 2 engineers to be the third member within 21 calendar days after the written request notification. The first two engineers previously selected shall then select one of the four proposed engineers in a blind draw. The committee shall be a continuance of the cooperative investigation and will re-consider all available information and if necessary, gather new and additional information to determine the validity, the cause, and if necessary, the remedy to the contradiction. The committee will focus upon the performance adequacy of the material(s) using

standard engineering principles and practices and to ensure public value, the committee may provide engineering recommendations as necessary. Unless otherwise agreed, the committee will have 30 calendar days from its formation to complete their review and submit their findings. The final resolution of the committee shall be by majority opinion, in writing, stamped and signed. Should the final resolution not be unanimous, the dissenter may attach a written, stamped, and signed minority opinion. Once started, the resolution process by committee shall continue to full conclusion unless:

1. Within 7 days of the formation of the committee, the Agency and the Contractor reach an acceptable resolution mechanism; or
2. Within 14 days of the formation of the committee, the initiating party withdraws its written notification and agrees to bear all investigative related costs thus far incurred; or
3. At any point by the mutual agreement of the Agency and the Contractor. Unless otherwise agreed, the Contractor shall bear and maintain a record for all the investigative costs until resolution. Should the investigation discover assignable causes for the contradiction, the assignable party, the Agency or the Contractor, shall bear all costs associated with the investigation. Should assignable causes for the contradiction extended to both parties, the investigation will assign costs cooperatively with each party or when necessary, equally. Should the investigation substantiate a contradiction without assignable cause, the investigation will assign costs cooperatively with each party or when necessary, equally. Should the investigation be unable to substantiate a contradiction, the initiator of the investigation shall bear all investigative costs. All claim notification requirements of the contract pertaining to the contradiction shall be suspended until the investigation is concluded.

4-2 MATERIALS TRANSPORTATION, HANDLING AND STORAGE. The Contractor shall order, purchase, transport, coordinate delivery, accept delivery, confirm the quantity and quality received, prepare storage area(s), store, handle, protect, move, relocate, remove and dispose excess of all materials used to accomplish the Work. Materials shall be delivered to the site of the work only during working hours, as defined in Section 6-7.2, and shall be accompanied by bills of lading that shall clearly state for each delivery: the name of the Contractor as consignee, the project name and number, address of delivery and name of consignor and a description of the material(s) shipped. Prior to storage of any materials which have been shipped to or by the Contractor to any location within the Agency's boundaries the Contractor shall provide the Engineer a copy of lease agreements for each property where such materials are stored. The lease agreement shall clearly state the term of the lease, the description of materials allowed to be stored and shall provide for the removal of the materials and restoration of the storage site within the time allowed for the Work. All such storage shall conform to all laws and ordinances that may pertain to the materials stored and to preparation of the storage site and the location of the site on which the materials are stored. Loss, damage or deterioration of all stored materials shall be the Contractor's responsibility. Conformance to the requirements of this section, both within and outside the limits of work are a part of the Work. The Engineer shall have the right to verify the suitability of materials and their proper storage at any time during the Work.

SECTION 5 – UTILITIES

5-1 LOCATION. The Agency and affected utility companies have, by a search of known records, endeavored to locate and indicate on the Plans, all utilities which are known to exist within the limits of the work. However, the accuracy and/or completeness of the nature, size and/or location of utilities indicated on the Plans is not guaranteed.

Where underground main distribution conduits such as water, gas, sewer, electric power, telephone, or cable television are shown on the Plans, the Contractor shall assume that every property parcel will be served by a service connection for each type of utility.

As provided in Section 4216 of the California Government Code, at least 2 working days prior to commencing any excavation, the Contractor shall contact the regional notification center (Underground Service Alert of Southern California) and obtain an inquiry identification number.

The California Department of Transportation is not required by Section 4216 to become a member of the regional notification center. The Contractor shall contact it for location of its subsurface installations.

Prior to pipeline excavation, the Contractor shall determine, by potholing, the locations and depths of all utilities which are shown on the Contract Documents or have been marked by the utility owners and which may affect or be affected by its operations. The Contractor shall pothole all service connections, utilities that cross or parallel (within 5 feet) the proposed construction, and all connection points to existing utilities. The Contractor shall record the material size (outside diameter), type, and horizontal and vertical locations (bearing and slope) and submit the data and allow time for the Engineer's review in accordance with Section 2-5.3.

If no separate pay item is provided in the Contract for potholing, full compensation for such work shall be considered included in the bid item of work requiring the potholing and no separate payment shall be made therefor.

5-2 PROTECTION. The Contractor shall not interrupt the service function or disturb the support of any utility without authority from the owner or order from the Agency. All valves, switches, vaults, and meters shall be maintained readily accessible for emergency shutoff.

Where protection is required to ensure support of utilities located as shown on the Plans or in accordance with Section 5-1, the Contractor shall, unless otherwise provided, furnish and place the necessary protection at its expense.

Upon learning of the existence and location of any utility omitted from or shown incorrectly on the Plans, the Contractor shall immediately notify the Engineer in writing. When authorized by the Engineer, support or protection of the utility will be paid for as provided in Section 3-2.2.3 or 3-3.

The Contractor shall immediately notify the Engineer and the utility owner if any utility is disturbed or damaged. The Contractor shall bear the costs of repair or replacement of any utility damaged if located as noted in Section 5-1.

When placing concrete around or contiguous to any non-metallic utility installation, the Contractor shall at its expense:

1. Furnish and install a 2-inch cushion of expansion joint material or other similar resilient material; or
2. Provide a sleeve or other opening which will result in a 2-inch minimum-clear annular space between the concrete and the utility; or
3. Provide other acceptable means to prevent embedment in or bonding to the concrete.

Where concrete is used for backfill or for structures which would result in embedment, or partial embedment, of a metallic utility installation; or where the coating, bedding or other cathodic protection system is exposed or damaged by the Contractor's operations, the Contractor shall notify the Engineer and arrange to secure the advice of the affected utility owner regarding the procedures required to maintain or restore the integrity of the system.

5-3 REMOVAL. Unless otherwise specified, the Contractor shall remove all interfering portions of utilities shown on the Plans or indicated in the Bid documents as "abandoned" or "to be abandoned in place". Before starting removal operations, the Contractor shall ascertain from the Agency whether the abandonment is complete, and the costs involved in the removal and disposal shall be included in the Bid for the items of work necessitating such removals.

The costs involved in the removal and disposal shall be considered incidental to the bid items of work necessitating such removals and no separate payment shall be made therefor, unless a bid item for "Removal" is specifically included in the bid proposal.

5-4 RELOCATION. When feasible, the owners responsible for utilities within the area affected by the Work will complete their necessary installations, relocations, repairs, or replacements before commencement of work by the Contractor. When the Plans or Specifications indicate that a utility installation is to be relocated, altered, or constructed by others, the Agency will conduct all negotiations with the owners and work will be done at no cost to the Contractor, except for manhole frame and cover sets to be brought to grade as directed and approved by the City. Utilities which are relocated in order to avoid interference shall be protected in their position and the cost of such protection shall be included in the Bid for the items of work necessitating such relocation.

After award of the Contract, portions of utilities which are found to interfere with the Work will be relocated, altered or reconstructed by the owners, or the Engineer may order changes in the Work to avoid interference. Such changes will be paid for in accordance with Section 3-2.

When the Plans or Specifications provide for the Contractor to alter, relocate, or reconstruct a utility, all costs for such work shall be included in the Bid for the items of work necessitating such work. Temporary or permanent relocation or alteration of utilities requested by the Contractor for its convenience shall be its responsibility and it shall make all arrangements and bear all costs.

The utility owner will relocate service connections as necessary within the limits of the Work or within temporary construction or slope easements. When directed by the Engineer, the Contractor shall arrange for the relocation of service connections as necessary between the meter and property line, or between a meter and the limits of temporary construction or slope easements. The relocation of such service connections will be paid for in accordance with provisions of Section 3-3. Payment will include the restoration of all existing improvements which may be affected thereby. The Contractor may agree with the owner of any utility to disconnect and reconnect interfering service connections. The Agency will not be involved in any such agreement.

In conformance with Section 5-6 the Contractor shall coordinate the work with utility agencies and companies. Prior to the installation of any and all utility structures within the limits of work by any utility agency or company, or its contractor, the Contractor shall place all curb or curb and gutter that is a part of the work and adjacent to the location where such utility structures are shown on the plans and are noted as being located, relocated or are otherwise shown as installed by others. In order to minimize delays to the Contractor caused by the failure of other parties to relocate utilities that interfere with the construction, the Contractor, upon the Engineer's approval, may be permitted to temporarily omit the portion of work affected by the utility. If such temporary omission is approved by the Engineer, the Contractor shall place survey or other physical control markers sufficient to locate the curb or curb and gutter to the satisfaction of the utility agency or company. Such temporary omission shall be for the Contractor's convenience and no additional compensation will be allowed therefore or for additional work, materials or delay associated with the temporary omission. The portion thus omitted shall be constructed by the Contractor immediately following the relocation of the utility involved unless otherwise directed by the Engineer.

5-5 DELAYS. The Contractor shall notify the Engineer of its construction schedule insofar as it affects the protection, removal, or relocation of utilities. Said notification shall be included as a part of the construction schedule required in Section 6-1. The Contractor shall notify the Engineer in writing of any subsequent changes in the construction schedule which will affect the time available for protection, removal, or relocation of utilities.

The Contractor will not be entitled to damages or additional payment for delays attributable to utility relocations or alterations if correctly located, noted, and completed in accordance with Section 5-1.

The Contractor may be given an extension of time for unforeseen delays attributable to unreasonably protracted interference by utilities in performing work correctly shown on the Plans.

The Agency will assume responsibility for the timely removal, relocation, or protection of existing main or trunkline utility facilities within the area affected by the Work if such utilities are not identified in the Contract Documents. The Contractor will not be assessed liquidated damages for any delay caused by failure of Agency to provide for the timely removal, relocation, or protection of such existing facilities.

If the Contractor sustains loss due to delays attributable to interferences, relocations, or alterations not covered by Section 5-1, which could not have been avoided by the judicious handling of forces, equipment, or plant, there shall be paid to the Contractor such amount as the Engineer may find to be fair and reasonable compensation for such part of the Contractor's actual loss as was unavoidable and the Contractor may be granted an extension of time.

5-6 COOPERATION. When necessary, the Contractor shall so conduct its operations as to permit access to the Work site and provide time for utility work to be accomplished during the progress of the Work. Cooperation with CMWD and City staff will be required for all work affecting existing utility systems or facilities and prior to water utility shutdowns, sewer bypass operations, testing and inspections, and project completion.

SECTION 6 – PROSECUTION, PROGRESS, AND ACCEPTANCE OF THE WORK

6-1 CONSTRUCTION SCHEDULE AND COMMENCEMENT OF WORK. Except as otherwise provided herein and unless otherwise prohibited by permits from other agencies as may be required by law the Contractor shall begin work within ten (10) calendar days after receipt of the "Notice to Proceed".

6-1.1 Pre-Construction Meeting. After, or upon, notification of contract award, the Engineer will set the time and location for the Preconstruction Meeting. Attendance of the Contractor's management personnel responsible for the management, administration, and execution of the project is mandatory for the meeting to be convened. Failure of the Contractor to have the Contractor's responsible project personnel attend the Preconstruction Meeting will be grounds for default by Contractor per Section 6-4. No separate payment will be made for the Contractor's attendance at the meeting. The notice to proceed will only be issued on or after the completion of the preconstruction meeting.

6-1.1.1 Baseline Construction Schedule. The Contractor shall prepare the Baseline Construction Schedule as a Critical Path Method (CPM) Schedule in the precedence diagram method (activity-on-node) format and submit the schedule in accordance with 2-5.3. The schedule shall:

A. Be prepared using a commercially available, Windows compatible software program, "Suretrak" by Primavera or "Project" by Microsoft Corporation or approved equal.

B. Be prepared in hard copy (paper) and electronic (Adobe PDF) format and free of file locking, encryption or any other protocol that would impede full access to the data and labeled with the project name and number, the Contractor's name and the date of preparation.

C. Begin with the date projected for the Notice to Proceed and conclude with the date of final completion conforming with the Contract time.

D. Depict a time-scaled network diagram of all activities, logic relationships of interdependent activities, and milestones comprising the complete period of Work with tasks on the vertical axis and their durations on the horizontal axis. Use distinctive texture patterns or line types to show the critical path within the Contract time. Include a tabular listing of each activity and its identification number, description, duration, early start, early finish, late start, late finish, total float, and all predecessor and successor activities. The number of activities will communicate the Contractor's plan for project execution, accurately describe the project work and allow monitoring and evaluation of progress and time impacts. Activity descriptions shall accurately define the work planned for the activity. Activity durations shall not be shorter than 1 working day or longer than 15 working days unless approved by the Engineer.

E. Include detail of all project phasing, staging and sequencing including all milestones necessary to define beginning and ending of each phase or stage and constraints which may impact any activity. Include time allowances for coordination with utility companies and other agencies, equipment and material deliveries, submittal reviews and approvals,

traffic control setup and phasing, Work performed by others, inspections, testing and commissioning, corrective work, and any non-work periods.

Float or slack time within the schedule is available without charge or compensation to the party or contingency that first exhausts it. A schedule which shows a project duration longer than the Contract time will not be accepted by the Engineer.

If the Baseline Construction Schedule does not meet the requirements of these specifications, the Contractor shall revise the schedule and resubmit it to the Engineer. Failure to obtain the Engineer's approval of the schedule within twenty-five (25) Working Days after the date of the Preconstruction Meeting shall be grounds to consider the Contractor in default of the Contract per 6-4. The time required by the Engineer to review the initial Baseline Construction Schedule submittal will not be included in the 25 Working Days. The Engineer shall complete subsequent reviews of the revised schedule and progress updates within 5 working days of receipt.

The Contractor shall not be permitted to commence any excavation or demolition activities until the Engineer accepts the Baseline Construction Schedule. For each day of delay beyond the 25 Working Days after the Preconstruction Meeting that the Baseline Construction Schedule is not accepted by the Engineer, the Contractor shall be charged $100 through a deductive Change Order.

The Engineer's response to each review will consist of one of the following:

"Accepted." The Contractor may proceed with the Work.

"Accepted with Comments." The Contractor may proceed with the Work, but must revise and resubmit the schedule prior to submittal of the first progress payment application. The Engineer's acceptance of the schedule is a condition precedent to payment of any progress payment.

"Not Accepted." The Contractor may not proceed with the Work and must revise and resubmit the schedule.

6-1.1.2 Schedule Updates and Revisions. The Contractor shall meet with the Engineer during the last week of each month to agree upon the completion level of each activity as a basis for progress payments. Schedule updates shall conform with the requirements for the initial submittal in 6-1.1.1 and shall:

A. Show the actual dates of each activity start and/or finish during the month. The schedule update shall include specific notation for any changes in actual dates after they are first reported.

B. Report the percent complete for each activity in progress at the end of the month as determined by the Engineer.

C. Include a list and explanation of all changes made to the activities, dates or interconnecting logic.

D. Include activity and network revisions reflecting the Change Orders approved in the previous month as agreed upon during the review and acceptance of the Change Orders.

The Engineer's responses to the progress schedule updates shall be as described in 6-1.1.1. The Contractor shall proceed with Work and request payment for the progress schedule updates as described therein.

Should the actual or projected progress of the Work exceed 5 percent of the Contract time, the Contractor shall prepare and submit a revised Baseline Construction Schedule independently of and prior to the next progress schedule update. The Contractor shall provide an explanation for each change made to the schedule.

If the Contractor fails to submit the progress schedule updates as required herein, the Contractor may elect to proceed with the Work at its own risk and shall forfeit payment for the progress schedule update until compliance is met. If the Contractor elects to delay or cease Work after failure to submit the progress schedule updates, any resulting delay, impact, or disruption to the Work will be the Contractor's responsibility.

6-1.1.3 Interim Revisions. Should the actual or projected progress of the Work exceed 5 percent of the Contract Time, the Contractor shall prepare and submit a revised Baseline Construction Schedule independently of and prior to the next progress schedule update with a list and explanation of each change made to the schedule. The submittal, schedule review and acceptance requirements of 6-1.1.2 shall apply,

6-1.1.4 Late Completion or Milestone Dates. If a schedule update indicates a completion date later than the Contract time or contractually required milestone completion date, the Agency may withhold Liquidated Damages for the number of days late. Should a subsequent schedule update which removes all or a portion of the delay be "Accepted" by the Engineer, all or the allocated portion of the previously held Liquidated Damages shall be released in the monthly payment to the Contractor immediately following such acceptance.

6-1.1.5 Final Schedule Update. The Contractor shall prepare and submit a final schedule update when one hundred percent of the Work is completed. The update must accurately represent the actual dates for all activities. The final schedule update shall be prepared and reviewed in accordance with 6-1.1.2. Acceptance of the final schedule update is required for release of funds retained per 9-3.2.

6-1.1.6 Three-Week Look Ahead Schedules. The Contractor shall submit a detailed 3-week look ahead schedule prior to each progress meeting throughout project duration. The schedules shall be revised weekly to identify the construction activities and durations for each bid item of work for the current week and the succeeding two weeks. The Contractor shall revise the schedule to include additional activities or actual progress when so requested by the Engineer.

6-1.1.7 Measurement and Payment. The Contractor's preparation, revision and maintenance of the Construction Schedule are incidental to the Work and no separate payment will be made therefor.

6-2 PROSECUTION OF WORK. To minimize public inconvenience and possible hazard and to restore street and other work areas to their original condition and state of usefulness as soon as practicable, the Contractor shall diligently prosecute the Work to completion. If the Engineer determines that the Contractor is failing to prosecute the Work to the proper extent, the Contractor shall, upon orders from the Engineer, immediately take steps to remedy the situation. All costs of prosecuting the Work as described herein shall be included in the Contractor's Bid.

Should the Contractor fail to take the necessary steps to fully accomplish said purposes, after orders of the Engineer, the Engineer may suspend the work in whole or part, until the Contractor takes said steps.

As soon as possible under the provisions of the Specifications, the Contractor shall backfill all excavations and restore to usefulness all improvements existing prior to the start of the Work.

If Work is suspended through no fault of the Agency, all expenses and losses incurred by the Contractor during such suspensions shall be borne by the Contractor. If the Contractor fails to properly provide for public safety, traffic, and protection of the Work during periods of suspension, the Agency may elect to do so, and deduct the cost thereof from monies due the Contractor. Such actions will not relieve the Contractor from liability.

The Contractor shall incorporate non-work days, moratoriums or special events specified in the Contract Documents into the Construction Schedule required by Section 6.1. No additional payment, adjustment of bid prices or adjustments of contract time will be allowed as a consequence of these events.

6-2.1 Order of Work. The work to be done shall consist of furnishing all labor, equipment and materials, and performing all operations necessary to complete the Work as shown or specified on the Contract Documents. The work descriptions in this section are an overview only and shall not relieve the Contractor from its responsibilities to conduct all coordination and perform the Work in accordance with the Contract Documents. The Contractor shall conduct the following general work activities:

1. Submit construction schedule, schedule of values, working drawings, submittals, shop drawings, sewer bypass plan, and/or highlining plan. Secure necessary permits and approvals in accordance with the Contract Documents.
2. Conduct surveying and staking of pipeline alignments, locations of appurtenances, limits of right-of-way or easements and pre-construction video and photographs. Conduct Underground Service Alert (DigAlert) notification and utility mark-out. Mobilize labor force, materials and equipment for subsequent phases of Work and install temporary facilities and BMPs, traffic control and excavation safety measures.
3. Pothole all utilities that cross or parallel (within 5 feet of) planned excavations and immediately notify the Engineer of any potential conflicts. Submit potholing data in accordance with Section 2-5.3. Pavement saw-cutting or excavation shall not commence at any construction heading until the project alignments have been staked and existing utilities have been potholed and confirmed by the Contractor to have no conflict with the Work.
4. Furnish and install manual transfer switch and associated receptacle.
5. Permit, furnish and operate temporary standby generator.
6. Decommission, demolish, and remove existing permanent standby generator.
7. Furnish and install new genset for permanent standby assignment and associated electrical improvements.
8. Decommission and remove temporary standby generator upon completion of all start up testing, power system studies and all ACPD permitting requirements to operate the permanent standby generator.

6-2.2 Construction Phasing. The following construction phase guidelines are provided for the Contractor's use in developing the construction schedule and a Work Plan that describes the labor, materials, equipment and procedures to conduct the Work. The phasing guidelines listed

herein are not intended to be a complete list of all construction activities and shall not relieve the Contractor from its responsibilities to coordinate and perform the Work, revise the phasing descriptions, or to develop additional phases or revise the order of phasing as necessary to complete the Work in its entirety in accordance with the Contract Documents.

The Contractor shall develop a detailed Work Plan describing the materials, equipment and procedures for each phase of the Work and submit the Work Plan in accordance with Section 2-5.3. Any modification of the phasing described below shall be approved by the Engineer.

6-2.2.1 Phasing Criteria. The Contractor shall accommodate the following criteria into the construction schedule and Work Plan:

1. All construction activities shall meet the scheduling restrictions identified in these specifications or as determined by the City during review of the Contractor's Work Plan. Refer to Section 6-2.
2. Contractor shall submit a Site Work Plan. The Work Plan shall identify staging areas; describe the methods for the protection of private improvements and existing utilities; and include a listing of materials and equipment and other pertinent details necessary to complete the work.
3. Contractor shall submit a sewer bypass plan and an excavation dewatering plan.
4. Contractor shall maintain two traffic lanes through the project site outside of work hours. One lane of travel with a flagging operation may be allowed during work hours, subject to approval of the Contractor's traffic control plan submittal.
5. Contractor shall coordinate with cultural resources and archaeological monitors for observation during all excavation activities.
6. Excavations must be backfilled or securely shored and plated at the end of each work day.
7. When water or fire service interruptions are necessary and approved, no customer shall be without water for longer than 8 hours. If a planned water service shutdown duration exceeds 8 hours, the Contractor shall submit a highline plan for approval and provide all highlining prior to the shutdown.
8. Excavations shall be backfilled and base paved within 3 working days of completing the respective pipeline segment.
9. Site restoration shall be completed within ten working days of completion of construction of all improvements.

6-2.3 Project Meetings. The Engineer will establish the time and location of weekly Project Meetings. The Contractor's Representative shall attend each Project Meeting. The Project Representative shall be the individual determined under Section 7-6, "The Contractor's Representative". No separate payment for attendance of the Contractor, the Contractor's Representative or any other employee or subcontractor or subcontractor's employee at these meetings will be made. If the Contractor's Representative cannot attend, the Contractor shall notify the Engineer a minimum of 24 hours prior to the start of the scheduled meeting. If the Contractor does not provide the required notification, the Contractor shall pay the Agency's costs for staff and consultants that attended. The Contractor shall be charged a minimum of 2 hours of each attendee's time via a deductive Change Order.

6-3 SUSPENSION OF WORK.

6-3.1 General. The Work may be suspended in whole or in part when determined by the Engineer that the suspension is necessary in the interest of the Agency. The Contractor shall

comply immediately with any written order of the Engineer. Such suspension shall be without liability to the Contractor on the part of the Agency except as otherwise specified in Section 6-6.3.

6-3.2 Archaeological and Paleontological Discoveries. The Contractor shall coordinate with the Archaeological and Cultural Monitor during excavation activities.

If discovery is made of items of archaeological or paleontological interest, the Contractor shall immediately cease excavation in the area of discovery and shall not continue until ordered by the Engineer. When resumed, excavation operations within the area of discovery shall be as directed by the Engineer.

Discoveries which may be encountered may include, but not be limited to, dwelling sites, stone implements or other artifacts, animal bones, human bones, and fossils.

The Contractor shall be entitled to an extension and compensation in accordance with Section 6-6.

6-4 DEFAULT BY CONTRACTOR. If the Contractor fails to promptly begin procurement or delivery of material and equipment, to commence the Work within the time specified, to maintain the rate of delivery of material, to execute the Work in the manner and at such locations as specified, or fails to maintain the Work schedule which will insure the Agency's interest, or, if the Contractor is not carrying out the intent of the Contract, the Agency may serve written notice upon the Contractor and the Surety on its Faithful Performance Bond demanding satisfactory compliance with the Contract.

The Contract may be canceled by the Board without liability for damage, when in the Board's opinion the Contractor is not complying in good faith, has become insolvent, or has assigned or subcontracted any part of the Work without the Board's consent. In the event of such cancellation, the Contractor will be paid the actual amount due based on Contract Unit Prices or lump sums bid and the quantity of the Work completed at the time of cancellation, less damages caused to the Agency by acts of the Contractor. The Contractor, in having tendered a Bid, shall be deemed to have waived any and all claims for damages because of cancellation of Contract for any such reason. If the Agency declares the Contract canceled for any of the above reasons, written notice to that effect shall be served upon the Surety. The Surety shall, within five (5) days, assume control and perform the Work as successor to the Contractor.

If the Surety assumes any part of the Work, it shall take the Contractor's place in all respects for that part and shall be paid by the Agency for all work performed by it in accordance with the Contract. If the Surety assumes the entire Contract, all money due the Contractor at the time of its default shall be payable to the Surety as the Work progresses, subject to the terms of the Contract.

If the Surety does not assume control and perform the Work within 5 days after receiving notice of cancellation, or fails to continue to comply, the Agency may exclude the Surety from the premises. The Agency may then take possession of all material and equipment and complete the Work by Agency forces, by letting the unfinished Work to another Contractor, or by a combination of such methods. In any event, the cost of completing the Work shall be charged against the Contractor and its Surety and may be deducted from any money due or becoming due from the Agency. If the sums due under the Contract are insufficient for completion, the

Contractor or Surety shall pay to the Agency within 5 days after the completion, all costs in excess of the sums due.

The provisions of this section shall be in addition to all other rights and remedies available to the Agency under law.

6-5 TERMINATION OF CONTRACT. The Board may terminate the Contract at its own discretion or when conditions encountered during the Work make it impossible or impracticable to proceed, or when the Agency is prevented from proceeding with the Contract by act of God, by law, or by official action of a public authority.

6-6 DELAYS AND EXTENSIONS OF TIME.

6-6.1 General. If delays are caused by unforeseen events beyond the control of the Contractor, such delays will entitle the Contractor to an extension of time as provided herein, but the Contractor will not be entitled to damages or additional payment due to such delays, except as provided in 6-6.3. Such unforeseen events may include war, government regulations, labor disputes, strikes, fires, floods, adverse weather or elements necessitating cessation of work, inability to obtain materials, labor or equipment, required extra work, or other specific events as may be further described in the Specifications.

No extension of time will be granted for a delay caused by the Contractor's inability to obtain materials unless the Contractor furnishes to the Engineer documentary proof. The proof must be provided in a timely manner in accordance with the sequence of the Contractor's operations and the approved construction schedule.

If delays beyond the Contractor's control are caused by events other than those mentioned above, the Engineer may deem an extension of time to be in the best interest of the Agency. The Contractor will not be entitled to damages or additional payment due to such delays, except as provided in Section 6-6.3.

If delays beyond the Contractor's control are caused solely by action or inaction by the Agency, such delays will entitle the Contractor to an extension of time as provided in Section 6-6.2.

6-6.2 Extensions of Time. Extensions of time, when granted, will be based upon the effect of delays to the Work. They will not be granted for noncontrolling delays to minor portions of the Work unless it can be shown that such delays did or will delay the progress of the Work.

6-6.3 Payment for Delays to Contractor. The Contractor will be compensated for damages incurred due to delays for which the Agency is responsible. Such actual costs will be determined by the Engineer. The Agency will not be liable for damages which the Contractor could have avoided by any reasonable means, such as judicious handling of forces, equipment, or plant. The determination of what damages the Contractor could have avoided will be made by the Engineer.

6-6.4 Written Notice and Report. The Contractor shall provide written notice to the Engineer within two hours of the beginning of any period that the Contractor has placed any workers or equipment on standby for any reason that the Contractor has determined to be caused by the Agency or by any organization that the Agency may otherwise be obligated by. The Contractor shall provide continuing daily written notice to the Engineer, each working day, throughout the duration of such period of delay. The initial and continuing written notices shall include the

classification of each workman and supervisor and the make and model of each piece of equipment placed on standby, the cumulative duration of the standby, the Contractor's opinion of the cause of the delay and a cogent explanation of why the Contractor could not avoid the delay by reasonable means. Should the Contractor fail to provide the notice(s) required by this section the Contractor agrees that no delay has occurred and that it will not submit any claim(s) therefore.

6-7 TIME OF COMPLETION.

6-7.1 General. The Contractor shall complete the Work within the time set forth in the Contract. The Contractor shall complete each portion of the Work within such time as set forth in the Contract for such portion. The time of completion of the Contract shall be expressed in calendar days. The Contractor shall diligently prosecute the work to completion within **two hundred fifty (250) working days** after the starting date specified in the Notice to Proceed.

6-7.2 Working Day. A working day is any day within the period between the start of the Contract time as defined in Section 6-1 and the date provided for completion, or upon field acceptance by the Engineer for all work provided for in the Contract, whichever occurs first, other than:

1. Saturday, Sunday, and any day designated as a holiday by the Agency;
2. any day identified as a construction moratorium due to special events or holiday periods;
3. any other day designated as a holiday in a Master Labor Agreement entered into by the Contractor or on behalf of the Contractor as an eligible member of a contractor association;
4. any day the Contractor is prevented from working at the beginning of the workday for cause as defined in Section 6-6.1;
5. any day the Contractor is prevented from working during the first 5 hours with at least 60 percent of the normal work force for cause as defined in Section 6-6.1.

In addition to Agency holidays, open excavations and service shutdowns will not be allowed on the day prior to Thanksgiving and between December 23 and January 1.

Main line or service shutdowns will not be allowed on Mondays and Fridays.

Unless otherwise approved in writing by the Engineer, the hours of work shall be between the hours of 7:00 a.m. and 4:00 p.m. on Mondays through Fridays, excluding Agency holidays and other restricted days or times as specified in 6-2.

The Contractor shall obtain the written approval of the Engineer if the Contractor desires to work outside said hours or at any time during weekends and/or holidays. This written permission must be obtained at least 48 hours prior to such work. The Engineer may approve work outside the hours and/or days stated herein when, in his/her sole opinion, such work conducted by the Contractor is beneficial to the best interests of the Agency. The Contractor shall pay the inspection costs of such work.

The Contractor shall incorporate the dates, areas and types of work prohibited elsewhere in the Contract Documents into the construction schedule. No additional payment, adjustment of bid prices or adjustment of contract time of completion will be allowed as a consequence of the prohibition of work being performed within the dates, areas and/or types of work prohibited in this section.

Contractor is hereby advised that the Engineer may require after hours or weekend work if required for the protection and safety of existing facilities, workers or the public.

6-7.3 Contract Time Accounting. The Engineer will make a daily determination of each working day to be charged against the Contract time. These determinations will be discussed and the Contractor will be furnished a periodic statement showing allowable number of working days of Contract time, as adjusted, at the beginning of the reporting period. The statement will also indicate the number of working days charged during the reporting period and the number of working days of Contract time remaining. If the Contractor does not agree with the statement, it shall file a written protest within 15 days after receipt, setting forth the facts of the protest. Otherwise, the statement will be deemed to have been accepted.

6-8 COMPLETION, ACCEPTANCE, AND WARRANTY.

6-8.1 Site Walk-Through. After the site has been fully restored, the Inspector will schedule an inspection within five days of the Contractor's request. The Contractor and Inspector shall attend the inspection and all outstanding deficiencies shall be identified in a List of Deficiencies.

A review of the red-line record drawings and asset schedule shall also be completed at the Site Walk-Through and all red-line deficiencies will be added to the List of Deficiencies.

6-8.2 List of Deficiencies. Following the Site Walk-Through, the Inspector will generate the List of Deficiencies (also known as the punchlist) within five working days. The Contractor shall then have 10 working days to perform corrective work and provide a written response to each punchlist item.

6-8.3 Site Follow-Up Walk-Through. Upon receipt of written responses to the List of Deficiencies, the Inspector will complete a follow-up inspection. Any outstanding deficiencies will be noted and returned to the Contractor. Outstanding deficiencies will delay full payment of any relevant bid items.

6-8.4 Request for Final Walk-Through. Once the Contractor asserts they have satisfied the terms of the Contract and with the Inspector's permission, the Contractor may submit written assertion in the form of a Request for Final Walk-Through, certifying that all deficiencies identified through the Site Walk-Through process have been addressed and request a Final Inspection to demonstrate project completion to the Agency. The Contractor shall provide an attachment to the Request for Final Inspection with the Contractor's written response to each deficiency. The Request for Final Inspection shall not be considered complete without the Contractor's written response to each deficiency.

6-8.5 Final Walk-Through. Upon receipt of the Request for Final Walk-Through, the Inspector shall schedule the Final Inspection. The Inspector and Contractor shall attend the final inspection. Representatives from other Agency departments reserve the right to be present at the Final Inspection.

The red-line record drawings and asset schedules shall also be reviewed.

If any deficiencies are not satisfactorily addressed or additional deficiencies are identified, the Contractor will have 10 working days to complete the corrective work.

6-8.6 Request for Completion. The Engineer will not accept the Work or any portion of the Work before all of the Work is completed and all outstanding deficiencies are corrected by the Contractor, and the Engineer is satisfied that all of the Work meets the requirements of the Contract Documents.

Once the Final Walk-Through has been completed and all outstanding deficiencies satisfactorily completed to Agency's approval, the Contractor shall submit a written assertion in the form of Request for Completion letter, certifying that the Work has been completed.

6-8.7 Completion. Upon receipt of the Request for Completion letter, the Agency shall review the written assertion within 2 working days. If, in the Engineer's judgment, the Work has been completed in accordance with the Contract Documents, the Agency will issue a Completion Letter.

The completion date will be the date to which liquidated damages will be computed.

Use, temporary, interim or permanent, of all, or portions of, the Work does not constitute completion or acceptance of the Work.

6-8.8 Acceptance. Acceptance will occur after all the requirements contained in the Contract Documents have been fulfilled. If, in the Engineer's judgment, the Contractor has fully performed the Contract, the Engineer will so certify to the Board. Upon such certification by the Engineer, the Board may accept the Work. Upon the Board's acceptance of the Work, the Agency will cause a "Notice of Completion" to be filed in the office of the San Diego County Recorder. The date of recordation shall be the date of acceptance of the Work.

6-8.9 Warranty. All work shall be warranted for one (1) year after acceptance of the Work and any faulty work or materials discovered during the warranty period shall be repaired or replaced by the Contractor, at its expense. Twenty-five percent of the faithful performance bond shall be retained as a warranty bond for the warranty period. The Contractor shall replace or repair any such defective work in a manner satisfactory to the Engineer, after notice to do so from the Engineer, and within the time specified in the notice. If the Contractor fails to make such replacement or repairs within the time specified in the notice, the Agency may perform this work and the Contractor's sureties shall be liable for the cost thereof.

6-9 LIQUIDATED DAMAGES. Failure of the Contractor to complete the Work within the time allowed will result in damages being sustained by the Agency. For each consecutive calendar day in excess of the time specified for completion of Work, as adjusted in accordance with Section 6-6, the Contractor shall pay the Agency, or have withheld monies due it, the sum of **two thousand dollars ($2,000.00)**. Such sum is liquidated damages and shall not be construed as a penalty and may be deducted from payments due the Contractor if such delay occurs.

Execution of the Contract shall constitute agreement by the Agency and Contractor that the amount specified above per day is the minimum value of costs and actual damages caused by the Contractor to complete the Work within the allotted time. Any progress payments made after the specified completion date shall not constitute a waiver of this paragraph or of any damages.

6-10 USE OF IMPROVEMENT DURING CONSTRUCTION. The Agency reserves the right to take over and utilize all or part of any completed facility or appurtenance. The Contractor will be notified in writing in advance of such action. Such action by the Agency will relieve the Contractor of responsibility for injury or damage to said completed portions of the improvement

resulting from use by public traffic or from the action of the elements or from any other cause, except Contractor operations or negligence. The Contractor will not be required to reclean such portions of the improvement before field acceptance, except for cleanup made necessary by its operations. Nothing in this section shall be construed as relieving the Contractor from full responsibility for correcting defective work or materials.

In the event the Agency exercises its right to place into service and utilize all or part of any completed facility or appurtenance, the Agency will assume the responsibility and liability for injury to persons or property resulting from the utilization of the facility or appurtenance so placed into service, except for any such injury to persons or property caused by any willful or negligent act or omission by the Contractor, Subcontractor, their officers, employees, or agents.

SECTION 7 – RESPONSIBILITIES OF THE CONTRACTOR

7-1 CONTRACTOR'S EQUIPMENT AND FACILITIES. The Contractor shall furnish and maintain in good condition all equipment and facilities as required for the proper execution and inspection of the Work. Such equipment and facilities shall meet all requirements of applicable ordinances and laws.

7-2 LABOR.

7-2.1 General. Only competent workers shall be employed on the Work. Any person employed who is found to be incompetent, intemperate, troublesome, disorderly, or otherwise objectionable, or who fails or refuses to perform work properly and acceptably, shall be immediately removed from the Work by the Contractor and not be reemployed on the Work.

7-2.2 Laws. The Contractor, its agents, and employees shall be bound by and comply with applicable provisions of the Labor Code and Federal, State, and local laws related to labor.

The Contractor shall strictly adhere to the provisions of the Labor Code regarding minimum wages; the 8-hour day and 40-hour week; overtime; Saturday, Sunday, and holiday work; and nondiscrimination because of race, color, national origin, sex, or religion. The Contractor shall forfeit to the Agency the penalties prescribed in the Labor Code for violations.

In accordance with the Labor Code, the Board has on file and will publish a schedule of prevailing wage rates for the types of work to be done under the Contract. The Contractor shall not pay less than these rates.

Each worker shall be paid subsistence and travel as required by the collective bargaining agreement on file with the State of California Department of Industrial Relations.

The Contractor's attention is directed to Section 1776 of the Labor Code which imposes responsibility upon the Contractor for the maintenance, certification, and availability for inspection of such records for all persons employed by the Contractor or Subcontractor in connection with the project. The Contractor shall agree through the Contract to comply with this Section and the remaining provisions of the Labor Code.

7-3 LIABILITY INSURANCE. Insurance shall be required as specified in section 10 of the Public Works Contract.

The cost of this insurance shall be included in the Contractor's Bid.

7-4 WORKERS' COMPENSATION INSURANCE. Before execution of the Contract by the Board, the Contractor shall file with the Engineer the following signed certification:

> "I am aware of the provisions of Section 3700 of the Labor Code which require every employer to be insured against liability for workers' compensation or to undertake self-insurance in accordance with the provisions of that code, and I will comply with such provisions before commencing the performance of the work of this contract."

The Contractor shall also comply with Section 3800 of the Labor Code by securing, paying for, and maintaining in full force and effect for the duration of the contract, complete Workers' Compensation Insurance, and shall furnish a Certificate of Insurance to the Engineer before execution of the Contract. The Agency, its officers, or employees, will not be responsible for any claims in law or equity occasioned by failure of the Contractor to comply with this paragraph.

All compensation insurance policies shall bear an endorsement or shall have attached a rider whereby it is provided that, in the event of expiration or proposed cancellation of such policies for any reason whatsoever, the Agency shall be notified by registered mail not less than 30 days before expiration or cancellation is effective.

All insurance is to be placed with insurers that are admitted and authorized to conduct business in the state of California and are listed in the official publication of the Department of Insurance of the State of California. Policies issued by the State Compensation Fund meet the requirement for workers' compensation insurance.

7-5 PERMITS. Except as specified herein the Contractor will obtain, at no cost to the Contractor all City of Carlsbad encroachment, right-of-way, grading and building permits necessary to perform work for this contract on Agency property, streets, or other rights-of-way. Contractor shall not begin work until all permits incidental to the work are obtained. The Contractor shall obtain and pay for all permits for the disposal of all materials removed from the project. The cost of said permit(s) shall be included in the price bid for the appropriate bid item and no additional compensation will be allowed therefor. The Contractor shall obtain and pay for all costs incurred for permits necessitated by its operations such as, but not limited to, those permits required for night work, oversize load, blasting, and demolition. For private contracts, the Contractor shall obtain all permits incidental to the Work or made necessary by its operations, and pay all costs incurred by the permit requirements.

The Contractor shall pay all business taxes or license fees that are required for the work.

7-5.1 Resource Agency Permits. No resource agency permits are required for the Work.

7-5.2 Air Pollution Control Permits. The use of materials or activities that can generate air emissions are regulated by the California Air Resource Board (CARB) and the San Diego County Air Pollution Control District (SDAPCD) and either require permits or are subject to state or local air regulations which establish limitations on equipment or product use or VOC content and requirements for recordkeeping and reporting. These materials and activities include, but are not limited to the following:

- Abrasive blasting
- Adhesives
- Asbestos abatement, removal or disruption
- Coating or painting
- Concrete curing compounds
- Demolition of buildings, equipment or structures
- Fiberglass/polyester resin layup or machining
- Operation of non-road diesel engines greater than 49 hp (including generators, compressors, pumps, hydro blasters, etc.)
- Operation of off-road diesel engines greater than 25 hp (including forklifts, construction equipment, load handlers, etc.)

- Solvents
- Welding

Operators of portable engines and other types of equipment can register their units under the CARB Statewide Portable Equipment Registration Program (PERP) in order to operate their equipment throughout California. However, the use of portable equipment (e.g., bypass pumps) to perform the function of permitted stationary equipment is subject to SDAPCD regulation in addition to CARB requirements.

Diesel-engine driven generators or equipment shall have a valid permit or registration in accordance with the California Air Resources Board and/or the San Diego County Air Pollution Control District regulations prior to mobilization to the site. The Contractor shall submit a copy of the permit or registration documents for all equipment subject to state or local air pollution control regulations and maintain the permit or registration documents in valid standing during the performance of the Work.

Products such as paints, adhesives, resins, solvents and other products shall comply with the Volatile Organic Compound (VOC) content limits established by CARB and/or the SDAPCD. The Contractor shall be responsible for determining that such products can be used legally in the performance of the Work. The Contractor shall maintain and submit records to the City Engineer on the quantities of paints or solvents used as may be required by applicable regulations.

Prior to starting any activity that is required to have an air pollution control permit or registration, the Contractor shall verify the applicability of the latest air pollution control regulations pertaining to the proposed materials, equipment and operations and obtain and comply with applicable requirements:

- Rule 11 – Exemptions from Rule 10 Permit Requirements
  Rule 12 – Registration of Specified Equipment
- Rule 12.1 – Portable Equipment Registration
- Rule 51 – Nuisance
- Rule 67.0.1 – Architectural Coatings
- Rule 67.17 – Storage of Materials Containing Volatile Organic Compounds
- Rule 71 – Abrasive Blasting

San Diego Air Pollution Control District: 858-586-2600
https://www.sdapcd.org/content/sdapcd/permits.html

California Air Resource Board:
https://ww2.arb.ca.gov/our-work/programs/portable-equipment-registration-program-perp/about

7-6 THE CONTRACTOR'S REPRESENTATIVE. Before starting work, the Contractor shall designate in writing a representative who shall have complete authority to act for it. An alternative representative may be designated as well. The representative or alternate shall be present at the Work site whenever work is in progress or whenever actions of the elements necessitate its presence to take measures necessary to protect the Work, persons, or property. Any order or communication given to this representative shall be deemed delivered to the Contractor. A joint venture shall designate only one representative and alternate. In the absence of the Contractor or its representative, instructions or directions may be given by the Engineer to

the superintendent or person in charge of the specific work to which the order applies. Such order shall be complied with promptly and referred to the Contractor or its representative.

In order to communicate with the Agency, the Contractor's representative, superintendent, or person in charge of specific work shall be able to speak, read, and write the English language.

The qualifications for the Contractor's Representative shall include at a minimum:

1. At least five years of experience in a superintendent capacity for projects that are similar in scope and cost to the projects identified in the Contractor's Statement of Technical Ability and Experience submitted with the bid, and successful completion of at least five projects involving diesel generator installations with contract values over $100,000. The Contractor shall be responsible for submitting verifiable experience records.
2. Completion of OSHA 30-hour Construction Training Course. Submit certification as proof.

The City reserves the right to disqualify bidders if the required technical ability and experience for the Contractor's Representative is not established.

In the event that the Contractor proposes to change the Contractor's Representative prior to Project completion, the Contractor shall notify the Agency and submit the qualifications of the proposed Contractor's Representative for the Engineer's review at least two weeks prior to the proposed change. The qualifications shall demonstrate that the minimum requirements of the position, as described herein, are satisfied. The Engineer will review the qualifications of proposed Contractor's Representative within 5 working days of receipt.

No change in Contractor's Representative will be allowed without the Agency's approval. In the event of a change in Contractor's Representative without prior approval, Agency reserves the right to suspend work, at the Contractor's cost, until a qualified Contractor's Representative is approved for the Project.

7-7 COOPERATION AND COLLATERAL WORK. The Contractor shall be responsible for ascertaining the nature and extent of any simultaneous, collateral, and essential work by others. The Agency, its workers and contractors and others, shall have the right to operate within or adjacent to the Work site during the performance of such work.

The Agency, the Contractor, and each of such workers, contractors and others, shall coordinate their operations and cooperate to minimize interference.

The Contractor shall include in its Bid all costs involved as a result of coordinating its work with others. the Contractor will not be entitled to additional compensation from the Agency for damages resulting from such simultaneous, collateral, and essential work. If necessary to avoid or minimize such damage or delay, the Contractor shall redeploy its work force to other parts of the Work.

Should the Contractor be delayed by the Agency, and such delay could not have been reasonably foreseen or prevented by the Contractor, the Engineer will determine the extent of the delay, the effect on the project, and any extension of time.

7-7.1 Coordination. The Contractor shall coordinate and cooperate with all utility companies during the mark-out and locating of their lines or during their relocation or construction if

necessary. The Contractor may be granted a time extension if, in the opinion of the Engineer, a delay is caused by the utility company. No additional compensation will be made to the Contractor for any such delay.

7-8 PROJECT SITE MAINTENANCE.

7-8.1 Cleanup and Dust Control. Throughout all phases of construction, including suspension of work, and until the final acceptance, the Contractor shall keep the site clean and free from rubbish and debris. The Contractor shall also abate dust nuisance by cleaning, sweeping and sprinkling with water, or other means as necessary. The use of water resulting in mud on public streets will not be permitted as a substitute for sweeping or other methods.

When required by the Plans or Specifications, the Contractor shall furnish and operate a self-loading motor sweeper with spray nozzles at least once each working day for the purpose of keeping paved areas acceptably clean wherever construction, including restoration, is incomplete.

Materials and equipment shall be removed from the site as soon as they are no longer necessary. Before the final inspection, the site shall be cleared of equipment, unused materials, and rubbish so as to present a satisfactory clean and neat appearance. All cleanup costs shall be included in the Contractor's Bid.

Care shall be taken to prevent spillage on haul routes. Any such spillage shall be removed immediately and the area cleaned.

Excess excavation material from catch basins or similar structures shall be removed from the site immediately. Sufficient material may remain for use as backfill if permitted by the Specifications. Forms and form lumber shall be removed from the site as soon as practicable after stripping.

Failure of the Contractor to comply with the Engineer's cleanup orders may result in an order to suspend work until the condition is corrected. No additional compensation will be allowed as a result of such suspension.

Cleanup and dust control required herein shall also be executed on weekends and other non-working days when needed to preserve the health safety or welfare of the public. The Contractor shall conduct effective cleanup and dust control throughout the duration of the Contract. The Engineer may require increased levels of cleanup and dust control that, in his/her sole discretion, are necessary to preserve the health, safety and welfare of the public. Cleanup and dust control shall be considered incidental to the items of work that they are associated with and no additional payment will be made therefore.

7-8.2 Air Pollution Control. The Contractor shall not discharge smoke, dust, or any other air contaminants into the atmosphere in such quantity as will violate the regulations of any legally constituted authority.

7-8.3 Vermin Control. At the time of acceptance, structures entirely constructed under the Contract shall be free of rodents, insects, vermin, and pests. Necessary extermination work shall be arranged and paid for by the Contractor as part of the Work within the Contract time and shall be performed by a licensed exterminator in accordance with requirements of

governing authorities. The Contractor shall be liable for injury to persons or property and responsible for the elimination of offensive odors resulting from extermination operations.

7-8.4 Sanitation. The Contractor shall provide and maintain enclosed toilets for the use of employees engaged in the Work. These accommodations shall be maintained in a neat and sanitary condition. They shall also comply with all applicable laws, ordinances, and regulations pertaining to public health and sanitation of dwellings and camps.

Wastewater shall not be interrupted. Should the Contractor disrupt existing sewer facilities, sewage shall be conveyed in closed conduits and disposed of in a sanitary sewer system. Sewage shall not be permitted to flow in trenches or be covered by backfill.

7-8.5 Temporary Light, Power, and Water. The Contractor shall furnish, install, maintain, and remove all temporary light, power, and water at its own expense. These include piping, wiring, lamps, and other equipment necessary for the Work. The Contractor shall not draw water from any fire hydrant (except to extinguish a fire), without obtaining permission from the water agency concerned. The Contractor shall obtain a construction meter for water used for the construction, plant establishment, maintenance, cleanup, testing and all other work requiring water related to this contract. The Contractor shall contact the appropriate water agency for requirements. The Contractor shall pay all costs of temporary light, power and water including hookup, service, meter and any, and all, other charges, deposits and/or fees therefor. Said costs shall be considered incidental to the items of work that they are associated with and no additional payment will be made therefor.

7-8.6 Water Pollution Control. The Contractor shall exercise every reasonable precaution to protect channels, storm drains, and bodies of water from pollution. It shall conduct and schedule operations so as to minimize or avoid muddying and silting of said channels, drains, and waters. Water pollution control work shall consist of constructing those facilities which may be required to provide prevention, control, and abatement of water pollution.

The Contractor shall comply with the California State Water Resources Control Board (SWRCB) Order Number R9-2013-0001, National Pollutant Discharge Elimination System (NPDES) Permit and Waste Discharge Requirements for Discharges from the Municipal Separate Storm Sewer Systems (MS4s) Draining the Watersheds within the San Diego Region, and amendments thereto, and with all requirements of the Storm Water Pollution Prevention Plan for this project in accordance with these regulations.

A Tier 2 Storm Water Pollution Prevention Plan (SWPPP) is provided to the Contractor, in Appendix “B”, for use in preparing the Project SWPPP for approval by the City. The Contractor shall be responsible for the preparation and implementation of the SWPPP and coordination with the City and the Regional Water Quality Control Board. Refer to Section 300-12.

7-8.6.1 Dewatering. Dewatering shall be performed by the Contractor when specifically required by the Plans or Specifications or specified in the bid schedule, and as necessary for construction of the Work. Dewatering shall be performed in conformance with all applicable local, state and Federal laws and permits issued by jurisdictional regulatory agencies.

Permits necessary for the discharge of groundwater to land or the sanitary sewer system shall be obtained by the Contractor unless provided by the City. Water shall be treated prior to disposal if so specified in the Special Provisions or required by a permit.

The Contractor shall submit a Dewatering Plan and related supporting information detailing its proposed plan and methodology of dewatering, treatment/pretreatment (when required for permit compliance) and disposal of accumulated water. The plan shall identify the following:

1. location, type and size of dewatering devices and related equipment,
2. size and type of materials composing the collection system,
3. size and type of equipment to be used to retain and, if required, treat accumulated water,
4. the proposed disposal locations, and
5. any other information required by the jurisdictional agency.

If the proposed disposal location is a sanitary sewer, the Contractor shall comply with the Special Use Discharge Permit from the Encina Wastewater Authority (Appendix C). If the proposed disposal location is a storm drain system or receiving body of water, the Contractor shall submit written evidence of permission from the owner of the storm drain system and, if not obtained by the Agency, original signed permits from jurisdictional regulatory agencies or written evidence that such permits are not required.

The City will install a groundwater monitoring well and provide the results of any tests conducted by the City to the Contractor prior to the start of construction. The Contractor shall perform additional sampling and testing to demonstrate compliance with the Special Use Discharge Permit or any other permit, or to support the application for any other permit as required.

All costs for dewatering including sample collection, testing, permit application fees and installation, testing and operation of the dewatering system shall be made at the contract price specified in the bid schedule for Dewatering. If no such bid item is listed, payment shall be considered included in the bid item of work requiring dewatering and no separate or additional payment shall be made therefor.

7-8.7 Drainage Control. The Contractor shall maintain drainage within and through the work areas. Earth dams will not be permitted in paved areas. Temporary dams of sandbags, asphaltic concrete, or other acceptable material will be permitted when necessary. Such dams shall be removed from the site as soon as their use is no longer necessary.

7-8.8 Noise Control. All internal combustion engines used in the construction shall be equipped with mufflers in good repair when in use on the project with special attention to the City Noise Control Ordinance, Carlsbad Municipal Code Chapter 8.48.

7-9 PROTECTION AND RESTORATION OF EXISTING IMPROVEMENTS. The Contractor shall be responsible for the protection of public and private property adjacent to the Work and shall exercise due caution to avoid damage to such property.

The Contractor shall repair or replace all existing improvements within the right-of-way which are not designated for removal (e.g., curbs, sidewalks, driveways, fences, walls, signs, utility installations, pavement, structures, etc.) which are damaged or removed as a result of its operations. When a portion of a sprinkler system within the right-of-way must be removed, the remaining lines shall be capped. Repairs and replacements shall be at least equal to existing improvements and shall match them in finish and dimension.

Maintenance of street and traffic signal systems that are damaged, temporarily removed or relocated shall be done in conformance with 307-1.5.

Trees, lawns, and shrubbery that are not to be removed shall be protected from damage or injury. If damaged or removed due to Contractor's operations, they shall be restored or replaced in as nearly the original condition and location as is reasonably possible. Lawns shall be restored with sod and unpaved areas covered with suitable mulch.

The Contractor shall give reasonable notice to occupants or owners of adjacent property to permit them to salvage or relocate plants, trees, fences, sprinklers, and other improvements, within the right-of-way which are designated for removal and would be destroyed because of the Work.

All costs to the Contractor for protecting, removing, and restoring existing improvements shall be included in the Bid.

7-9.1 Preconstruction Survey. The Contractor shall perform a preconstruction survey of the project site to provide a record of preconstruction conditions. This survey shall include the following as a minimum:

1. Video of existing public right-of-way, proposed alignment, utility mark-outs, working areas, staging and storage areas. Conduct the survey after construction staking has been completed.
2. Video of construction access roads to be used by the Contractor, including all public and private streets used for access to and from the work site. Indicate areas of damaged paving.
3. Any other areas as directed by the Owner which may be disturbed or which are to be protected from the Contractor's operations.
4. Photographs and video of potential "problem areas".
5. Notify the Owner seven calendar days in advance and coordinate the scheduling of the video so that a representative of the Owner may accompany the Contractor during the videotaping.
6. At the completion of the survey, the Contractor shall present the Owner with a report detailing the existing conditions at each proposed pipeline site, staging, and stockpile areas. The report shall include the following as a minimum:
   a. One copy of the video in color in digital format.
   b. One copy of each "potential problem area" photograph (4-inch by 6-inch colored photos).
   c. Written summary of "potential problem areas" and the Contractor's recommendations to address these problem areas.
7. Documentation (including report) of existing conditions shall be completed within 15 days of the Notice to Proceed. The Contractor will not be allowed to begin excavation or dewatering activities until the final report has been submitted and accepted by the Owner.

7-10 PUBLIC CONVENIENCE AND SAFETY.

7-10.1 Traffic and Access. The Contractor's operations shall cause no unnecessary inconvenience. The access rights of the public shall be considered at all times. Unless otherwise authorized, traffic shall be permitted to pass through the Work, or an approved detour shall be provided.

In areas where site access is restricted, the Contractor is responsible for coordinating site access. All communications shall be made through the City inspector unless otherwise approved.

No excavation or vehicle access will be allowed to occur outside of the easement, outside of the right-of-way, or in vegetated or landscaped areas unless otherwise shown on the Plans or as approved by the Engineer.

Safe and adequate pedestrian and vehicular access shall be provided and maintained to fire hydrants; commercial and industrial establishments; churches, schools and parking lots; service stations and motels; hospitals; police and fire stations; public transportation stops and establishments of similar nature. Access to these facilities shall be continuous and unobstructed unless otherwise approved by the Engineer. Pedestrian crossings of the Work at intervals not exceeding 300 feet (90 m) shall be provided and maintained unless otherwise approved by the Engineer.

The Contractor shall refer to and comply with the requirements of Section 302-15 and Part 6 of the Supplemental Provisions.

7-10.2 Storage of Equipment and Materials in Public Streets. Construction materials shall not be stored in streets, roads, or highways after unloading. Construction equipment shall not be stored at the Work site before its actual use on the Work or after it is no longer needed. All materials or equipment not installed or used in construction on any given day shall be stored elsewhere by the Contractor at its expense unless otherwise approved by the Engineer.

Excavated material, except that which is to be used as backfill in the adjacent trench on the same day, shall not be stored in public streets. After placing backfill, all excess material shall be removed immediately from the site.

7-10.3 Street Closures, Detours, Barricades. The Contractor shall comply with all applicable State, County, and City requirements for closure of streets. The Contractor shall provide barriers, guards, lights, signs, temporary bridges, flag persons, and watchpersons. The Contractor shall be responsible for compliance with additional public safety requirements which may arise. The Contractor shall furnish and install signs and warning devices and promptly remove them upon completion of the Work.

After obtaining the Engineers approval and at least 5 working days before closing, detouring, partially closing or reopening any street, alley or other public thoroughfare the Contractor shall notify the following:

The Engineer..... 442-339-2766
Carlsbad Fire Administration 442-339-2141
Carlsbad Police Department Dispatch..... 442-339-2197
Carlsbad Traffic Signals Maintenance 760-438-2980
Carlsbad Traffic Signals Operations 442-339-2736
North County Transit District 760-966-6500
Republic Services 760-332-6464

The Contractor shall comply with their requirements. The Contractor shall obtain the Engineer's written approval prior to deviating from the requirements of 2) through, and including, 7) above.

The Contractor shall obtain the written approval no less than five working days prior to placing any traffic control that affects bus stops.

The Contractor shall secure approval, in advance, from authorities concerned for the use of any bridges proposed by it for public use. Temporary bridges shall be clearly posted as to load limit, with signs and posting conforming to current requirements covering “signs” as set forth in the Traffic Manual published by the California Department of Transportation. This manual shall also apply to the street closures, barricades, detours, lights, and other safety devices required.

All costs involved shall be included in the Bid.

Temporary traffic controls shall be in accordance with the Plans, the TCP, the California Manual on Uniform Traffic Control Devices (MUTCD), current edition, and the Contract Documents.

7-10.3.1 Construction Area Signs and Control Devices. All construction traffic signs and control devices shall be maintained throughout the duration of work in good order and according to the approved traffic control plan. All temporary traffic control devices shall conform to Caltrans Standard Specification 12-3.

Warning and advisory signs, lights and devices shall be furnished, installed and maintained by the Contractor and shall be promptly removed by the Contractor when no longer required. Warning and advisory signs that remain in place overnight shall be stationary mounted signs. Stationary signs that warn of non-existent conditions shall be removed from the traveled way and from the view of motorists in the traveled way or shielded from the view of the traveling public during such periods that their message does not pertain to existing conditions.

All excavation required to install stationary construction area signs shall be performed by hand methods without the use of power equipment. Warning and advisory signs that are used only during working hours may be portable signs. Portable signs shall be removed from the traveled way and shielded from the view of the traveling public during non-working hours.

Personal vehicles of the Contractor's employees shall not be parked within the traveled way, including any Section closed to public traffic. Whenever the Contractor’s vehicles or equipment are parked on the shoulder within 6’ of a traffic lane, the shoulder area shall be closed with fluorescent traffic cones or portable delineators placed on a taper in advance of the parked vehicles or equipment and along the edge of the pavement at not less than 25’ intervals to a point not less than 25’ past the last vehicle or equipment. A minimum of nine (9) cones or portable delineators shall be used for the taper. A W20-1 (Road Work Ahead) or C24 (Shoulder Work Ahead) sign shall be mounted, as required herein, on a signpost or telescoping flag tree with flags. The signpost or flag tree shall be placed where directed by the Engineer.

7-10.3.2 Maintaining Traffic. The Contractor’s personnel shall not work closer than 1.8 m (6’) nor operate equipment within 0.6 m (2’) from any traffic lane occupied by traffic. For equipment, the distance shall be measured from the closest approach of any part of the equipment as it is operated and/or maneuvered in performing the work. This requirement may be waived when the Engineer has given written authorization to the reduction in clearance that is specific to the time, duration and location of such waiver, when such reduction is shown on the traffic control plans included in these Contract Documents, when such reduction is shown on the traffic control plans prepared by the Contractor and approved by the Engineer or for the work of installing, maintaining and removing traffic control devices. As a condition of such waiver the Engineer

may require the Contractor to detour traffic, adjust the width of, or realign the adjacent traffic lane, close the adjacent traffic lane or provide barriers.

During the entire construction, a minimum of one, 12-foot wide paved traffic lane shall be open for use by public traffic in each direction of travel.

7-10.3.3 Traffic Control System for Lane Closure. A traffic control system consists of closing traffic lanes or pedestrian walkways in accordance with the details shown on the plans, California Manual on Uniform Traffic Control Devices (FHWA MUTCD, current edition, as amended for use in California) and provisions under "Maintaining Traffic" elsewhere in these Provisions. The provisions in this section will not relieve the Contractor from its responsibility to provide such additional devices or take such measures as may be necessary to maintain public safety.

When lanes are closed for only the duration of work periods, all components of the traffic control system, except portable delineators placed along open trenches or excavation adjacent to the traveled way, shall be removed from the traveled way and shoulder at the end work period. If the Contractor so elects, said components may be stored at selected central locations, approved by the Engineer, within the limits of the right-of-way.

7-10.3.4 Traffic Control for Permanent and Temporary Traffic Striping. During traffic striping operations, traffic shall be controlled with lane closures, as provided for under "Traffic Control System for Lane Closure" of these Supplemental Provisions or by use of an alternative traffic control plan proposed by the Contractor and approved by the Engineer. The Contractor shall not start traffic striping operations using an alternative plan until the Contractor has submitted its plan to the Engineer and has received the Engineer's written approval of said plan.

7-10.3.5 Temporary Pavement Delineation. Temporary pavement delineation shall be furnished, placed, maintained and removed in accordance with the minimum standards specified in the latest California Manual on Uniform Traffic Control Devices (CAMUTCD) published by Caltrans. Whenever the work causes obliteration of pavement delineation, temporary or permanent pavement delineation shall be in place prior to opening the traveled way to public traffic. Lane line or centerline pavement delineation shall be provided at all times for traveled ways open to public traffic. All work necessary, including any required lines or marks, to establish the alignment of temporary pavement delineation shall be performed by the Contractor. When temporary pavement delineation is removed, all lines and marks used to establish the alignment of the temporary pavement delineation shall be removed by grinding.

Surfaces to receive temporary pavement delineation shall be dry and free of dirt and loose material. Temporary pavement delineation shall not be applied over existing pavement delineation or other temporary pavement delineation. Temporary pavement delineation shall be maintained until superseded or replaced with permanent pavement delineation.

Temporary pavement delineation shall be removed when, as determined by the Engineer, the temporary pavement delineation conflicts with the permanent pavement delineation or with a new traffic pattern for the area and is no longer required for the direction of public traffic. When temporary pavement delineation is required to be removed, all lines and marks used to establish the alignment of the temporary pavement delineation shall be removed.

7-10.3.6 Preparation of Traffic Control Plans. The Contractor shall submit traffic control plans (TCPs) as a part of the Work for all construction activities that are located within the traveled

way. TCPs shall be prepared by a professional engineer registered in the State of California and regularly engaged in the preparation of traffic control plans. Design of TCPs for construction shall meet the requirements of the City and the California Manual on Uniform Traffic Control Devices as published by Caltrans. Submittal and review requirements for TCPs shall conform to Section 2-5.3 Shop Drawings and Submittals.

The Contractor must obtain the Engineer's approval prior to implementing TCPs. The minimum 20-day review period specified in Section 2-5.3.1 for shop drawings and submittals shall pertain to each submittal of TCPs. New or revised TCP submittals shall include all TCPs needed for the entire duration of the Work. Each TCP phase shall be prepared in sufficient scale and detail to show the lane widths, transition lengths, curve radii, stationing of features affecting the traffic control plan and the methodology proposed to transition to the subsequent TCP phase. When the vertical alignment of the traveled surface differs from the finished pavement elevation, vertical curves must also be shown. The Engineer shall be the sole judge of the suitability and quality of any such TCPs.

7-10.3.7 Payment. The contract price paid for Traffic Control shall include full compensation for furnishing all labor, materials, tools, equipment and incidentals, and for performing all work involved to implement the traffic control system, complete in-place, including, but not limited to, preparing and revising TCPs, flag persons, installing temporary or permanent traffic control devices such as barriers, delineators, lighting, signage, portable changeable message signs, striping, pavement markers and markings in accordance with the Contract Documents and as directed by the Engineer. Progress payments for Traffic Control will be based on the percentage of the improvement work necessitating traffic control and completed.

7-10.4 Safety.

7-10.4.1 Safety Orders. The Contractor shall have at the Work site, copies or suitable extracts of: Construction Safety Orders, Tunnel Safety Orders and General Industry Safety Orders issued by the State Division of Industrial Safety. The Contractor shall comply with provisions of these and all other applicable laws, ordinances, and regulations.

Before excavating any trench 5 feet or more in depth, the Contractor shall submit a detailed plan to the Agency showing the design of shoring, bracing, sloping, or other provisions to be made for the workers' protection from the hazard of caving ground during the excavation of such trench. If the plan varies from the shoring system standards, the plan shall be prepared by a registered Civil Engineer. No excavation shall start until the Engineer has accepted the plan and the Contractor has obtained a permit from the State Division of Industrial Safety. A copy of the permit shall be submitted to the Engineer.

Payment for performing all work necessary to provide safety measures shall be included in the prices bid for other items of work except where separate bid items for excavation safety are provided or required by law.

7-10.4.2 Use of Explosives. Explosives may be used only when authorized in writing by the Engineer, or as otherwise stated in the Specifications. Explosives shall be handled, used, and stored in accordance with all applicable regulations.

The Engineer's approval of the use of explosives shall not relieve the Contractor from liability for claims caused by blasting operations.

7-10.4.3 Special Hazardous Substances and Processes. Materials that contain hazardous substances or mixtures may be required on the Work. A Material Safety Data Sheet as described in Section 5194 of the California Code of Regulations shall be requested by the Contractor from the manufacturer of any hazardous products used.

Material usage shall be accomplished with strict adherence to California Division of Industrial Safety requirements and all manufacturer warnings and application instructions listed on the Material Safety Data Sheet and on the product container label.

The Contractor shall notify the Engineer if a specified product cannot be used under safe conditions.

7-10.4.4 Confined Spaces.
(a) Confined Space Entry Program. The Contractor shall be responsible for implementing, administering and maintaining a confined space entry program (CSEP) in accordance with Sections 5156, 5157 and 5158, Title 8, CCR.

Prior to starting the Work, the Contractor shall prepare and submit its comprehensive CSEP to the Engineer. The CSEP shall address all potential physical and environmental hazards and contain procedures for safe entry into confined spaces, including, but not limited to the following:

1. Training of personnel
2. Purging and cleaning the space of materials and residue
3. Potential isolation and control of energy and material inflow
4. Controlled access to the space
5. Atmospheric testing of the space
6. Ventilation of the space
7. Special hazards consideration
8. Personal protective equipment
9. Rescue plan provisions

The Contractor's submittal shall include the names of its personnel, including subcontractor personnel, assigned to the project who will have CSEP responsibilities, their CSEP training, and their specific assignment and responsibility in carrying out the CSEP.

(b) Permit-Required Confined Spaces. Entry into permit-required confined spaces as defined in Section 5157, Title 8, CCR may be required as a part of the Work. All manholes, tanks, vaults, pipelines, excavations, or other enclosed or partially enclosed spaces shall be considered permit-required confined spaces until the pre-entry procedures demonstrate otherwise. The Contractor shall implement a permit space program prior to performing any work in a permit-required confined space. A copy of the permit shall be available at all times for review by Contractor and Agency personnel at the Work site.

(c) Payment. Payment for implementing, administering, and providing all equipment and personnel to perform the CSEP shall be included in the bid items for which the CSEP is required.

7-10.4.5 Safety and Protection of Workers and Public. The Contractor shall take all necessary precautions for the safety of employees on the work and shall comply with all applicable provisions of Federal, State and Municipal safety laws and building codes to prevent accidents or injury to persons on, about, or adjacent to the premises where the work is being

performed. The Contractor shall erect and properly maintain at all times, as required by the conditions and progress of the work, all necessary safeguards for the protection of workers and public and shall use danger signs warning against hazards created by such features of construction as protruding nails, hoists, well holes, and falling materials.

7-10.4.6 Flood Lighting.

7-10.4.6.1 General. When work is being performed during hours of darkness, as defined in Division 1, Section 280, of the California Vehicle Code, flood lighting shall be used to illuminate the Work site, flagger stations, equipment crossings and other hazardous areas. Flood lighting shall provide visibility for a distance of 1/2 mile (800 m). Flood lights shall not shine directly into the view of oncoming traffic.

7-10.4.6.2 Payment. No separate or additional payment will be made for flood lighting. Payment shall be included in the Contract Unit Price or lump sum price in the Bid for the various Bid items.

7-10.4.7 Security and Protective Devices.

7-10.4.7.1 General. Security and protective devices shall consist of fencing, steel plates, or other devices as specified in the Special Provisions to protect open excavations.

7-10.4.7.2 Security Fencing. The Contractor shall completely fence open excavations. Security fencing shall conform to 304-5. Security fencing shall remain in place unless workers are present and construction operations are in progress during which time the Contractor shall provide equivalent security.

7-10.4.7.3 Payment. No separate or additional payment will be made for security fencing or protective devices. Payment shall be included in the Contract Unit Price or lump sum price in the Bid for the various Bid items.

7-10.4.8 Steel Plate Covers.

7-10.4.8.1 General. The Contractor shall provide, install, and maintain steel plate covers as necessary to protect from accidental entry into openings, trenches, and excavations. Plates shall provide complete coverage to prevent any person, bicycle, motorcycle, or motor vehicle from being endangered due to plate movement causing separations or gaps. The Contractor shall submit the design in accordance with Section 2-5.3 which shall include the following criteria:

1. The approval of steel plate bridging shall be at the sole discretion of the Engineer.
2. Steel plate bridging shall be designed to support HS20-44 truck loading per Caltrans Bridge Design Specifications Manual.
3. Surfaces exposed to pedestrian or vehicular traffic shall be non-skid. The Contractor shall maintain a non-skid surface on the steel plate having a minimum coefficient of friction equivalent to 0.35 as determined by California Test Method 342. If a different test method is used, the Contractor may utilize standard test plates with known coefficients of friction available from each Caltrans District Materials Engineer to correlate skid resistance results to California Test Method 342.

4. The Contractor shall install signage with a 2-inch (51 mm) minimum letter height indicating the steel plate cover load limit, the Company's name, and a 24-hour emergency contact phone number. The
5. Contractor shall install Rough Road (W33) sign with black lettering on an orange background in advance of steel plate bridging.
6. The Contractor is responsible for the maintenance of the plates and asphalt concrete ramps or other devices used to secure the plates and shoring of the trench to support all loads.
7. Contractor shall immediately mobilize necessary personnel and equipment to repair plate movements, separation, noise, anchors, asphalt ramps or any other deficiency. Failure to respond within 2 hours after being notified by the Engineer shall be grounds for the City to perform necessary repairs at the expense of the Contractor.
8. When plates are removed, the pavement surface shall be repaired to the satisfaction of the Engineer.
9. For trench widths exceeding those in Table 7-10.4.8.2, a structural design shall be prepared by a California registered civil or structural engineer regularly engaged in the design of shoring systems.

7-10.4.8.2 Thickness. Steel plate covers shall conform to Table 7-10.4.8.2.

TABLE 7-10.4.8.2

Trench Width	Steel Plate Cover Thickness
Less than 10"	1/2" (12.5 mm)
10" (250 mm) to 1'-11" (580 mm)	3/4" (19 mm)
2' (600 mm) to 2'-7" (790 mm)	7/8" (22 mm)
2'-8" (820 mm) to 3'-5" (1040 mm)	1" (25 mm)
3'-6" (1070 mm) to 5'-3" (1600 mm)	1-1/4" (32 mm)
More than 5'-3" (1600 mm)	See Note 1

Notes:
The Contractor shall submit a Working Drawing and calculations based on AASHTO H20-44 bridge loading.

7-10.4.8.3 Installation. Steel plate covers shall extend a minimum of 2 feet (600 mm) beyond trench edges. Unless otherwise specified in the Special Provisions or approved by the Engineer for the site conditions prior to use, steel plate covers shall be installed using Method 1. Method 2 shall not be used in a traveled lane.

Method 1. The pavement shall be cold milled to a depth equal to the thickness of the plate and to a width and length equal to the dimensions of the plate. The cold milling shall produce a flat surface to support the plate with no horizontal or vertical movement. Horizontal gaps between the unmilled pavement and the plate shall not exceed 1 inch (25 mm) and shall be filled with elastomeric sealant material which may, at the Contractor's option, be mixed with no more that 50%, by volume, of Type I aggregate conforming to the requirements of Tables 203-5.2(B) and 203-5.3(A).

Method 2. The approach plate and ending plate (in longitudinal placement) shall be attached to the surface by a minimum of 2 dowels, ¾" diameter (19 mm), drilled at the corners of the plate and drilled 6 inches (150 mm) into the pavement. Subsequent plates may be butted next to each other. Temporary asphalt concrete (D2-SC 800) shall be used to construct tapers from the steel plate surface to the existing surface at a 12-inch (300 mm) run for each 1 inch (25 mm) thickness of steel plate. When steel plates are removed, the dowel holes in the pavement section shall be completely filled with elastomeric sealant material.

Advance traffic warning signs shall be installed as specified in the Special Provisions or shown on the TCP.

7-10.4.8.4 Payment. Steel plate bridging materials including, but not limited to steel plates, anchoring devices, cold milling, elastomeric sealant material, asphalt ramping and padding, signage, placing, installation, removal, relocation, preparation and processing of shop drawings and submittals to support the use of steel plate bridging and all other materials, labor, supervision, overhead of any type or description will be considered as incidental to the work. No separate or additional payment for steel plate bridging will be made. No extension to contract time will be allowed for, or because of, the use of steel plate bridging.

7-11 PATENT FEES OR ROYALTIES. The Contractor shall absorb in its Bid the patent fees or royalties on any patented article or process furnished or used in the Work. The Contractor shall indemnify and hold the Agency harmless from any legal action that may be brought for infringement of patents.

7-12 ADVERTISING. The names, addresses and specialties of Contractors, Subcontractors, architects, or engineers may be displayed on removable signs. The size and location shall be subject to the Engineer's approval.

Commercial advertising matter shall not be attached to or painted on the surfaces of buildings, fences, canopies, or barricades.

7-13 LAWS TO BE OBSERVED. The Contractor shall keep fully informed of State and National laws and County and Municipal ordinances and regulations which in any manner affect those employed in the Work or the materials used in the Work or in any way affect the conduct of the Work. The Contractor shall at all times observe and comply with such laws, ordinances, and regulations. Municipal ordinances that affect this work include Chapter 11.06. Excavation and Grading. If this notice specifies locations or possible materials, such as borrow pits or gravel beds, for use in the proposed construction project which would be subject to Section 1601 or Section 1603 of the Fish and Game Code, the conditions established pursuant to Section 1601 et seq. of the Fish and Game Code shall become conditions of the contract.

7-14 ANTITRUST CLAIMS. Section 7103.5 of the Public Contract Code provides:

> "In entering into a public works contract or a subcontract to supply goods, services, or materials pursuant to a public works contract, the contractor or subcontractor offers and agrees to assign to the awarding body all rights, title, and interest in and to all causes of action it may have under Section 4 of the Clayton Act (15 U.S.C. Sec 15) or Cartwright Act (Chapter 2 [commencing with Section 16700] of Part 2 of Division 7 of the Business and Professions Code), arising from purchases of goods, services, or materials pursuant to the public works contract or subcontract. The assignment shall be made and become effective at the time the awarding body tenders final payment to the contractor, without further acknowledgment of the parties."

SECTION 8 – FACILITIES FOR AGENCY PERSONNEL

8-1 GENERAL. Field Facilities for Agency personnel are not required.

SECTION 9 – MEASUREMENT AND PAYMENT

9-1 MEASUREMENT OF QUANTITIES FOR UNIT PRICE WORK.

9-1.1 General. Unless otherwise specified, quantities of work shall be determined from measurements or dimensions in horizontal planes. However, linear quantities of pipe, piling, fencing and timber shall be considered as being the true length measured along longitudinal axis.

Unless otherwise provided in Specifications, volumetric quantities shall be the product of the mean area of vertical or horizontal sections and the intervening horizontal or vertical dimension. The planimeter shall be considered an instrument of precision adapted to measurement of all areas.

9-1.2 Methods of Measurement. Materials and items of work which are to be paid for on basis of measurement shall be measured in accordance with methods stipulated in the particular sections involved.

9-1.3 Certified Weights. When payment is to be made on the basis of weight, the weighing shall be done on certified platform scales or, when approved by the Engineer, on a completely automated weighing and recording system. The Contractor shall furnish the Engineer with duplicate licensed weighmaster's certificates showing actual net weights. The Agency will accept the certificates as evidence of weights delivered.

9-1.4 Units of Measurement. The system of measure for this contract shall be the U.S. Standard Measures.

9-2 LUMP SUM WORK. Items for which quantities are indicated "Lump Sum", "L.S.", or "Job", shall be paid for at the price indicated in the Bid. Such payment shall be full compensation for the items of work and all work appurtenant thereto.

The Contractor shall submit to the Engineer within 15 days after award of Contract, a detailed schedule in triplicate, to be used as a basis for determining progress payments on a lump sum contract or designated lump sum bid item. This schedule shall equal the lump sum bid and shall be in such form and sufficiently detailed as to satisfy the Engineer that it correctly represents a reasonable apportionment of the lump sum.

9-3 PAYMENT.

9-3.1 General. The quantities listed in the Bid schedule will not govern final payment. Payment to the Contractor will be made only for actual quantities of Contract items constructed in accordance with the Plans and Specifications. Upon completion of construction, if the actual quantities show either an increase or decrease from the quantities given in the Bid schedule, the Contract Unit Prices will prevail subject to the provisions of Section 3-2.2.1.

The unit and lump sum prices to be paid shall be full compensation for the items of work and all appurtenant work, including furnishing all materials, labor, equipment, tools, and incidentals.

Payment will not be made for materials wasted or disposed of in a manner not called for under the Contract. This includes rejected material not unloaded from vehicles, material rejected after

it has been placed, and material placed outside of the Plan lines. No compensation will be allowed for disposing of rejected or excess material.

Payment for work performed or materials furnished under an Assessment Act Contract will be made as provided in particular proceedings or legislative act under which such contract was awarded.

Whenever any portion of the Work is performed by the Agency at the Contractor's request, the cost thereof shall be charged against the Contractor, and may be deducted from any amount due or becoming due from the Agency.

Whenever immediate action is required to prevent violation of any law, injury, death, or property damage, and precautions which are the Contractor's responsibility have not been taken and are not reasonably expected to be taken, the Agency may, after reasonable attempt to notify the Contractor, cause such precautions to be taken and shall charge the cost thereof against the Contractor, or may deduct such cost from any amount due or becoming due from the Agency. Agency action or inaction under such circumstances shall not be construed as relieving the Contractor or its Surety from liability.

Payment shall not relieve the Contractor from its obligations under the Contract; nor shall such payment be construed to be acceptance of any of the Work. Payment shall not be construed as the transfer of ownership of any equipment or materials to the Agency. Responsibility of ownership shall remain with the Contractor who shall be obligated to store any fully or partially completed work or structure for which payment has been made; or replace any materials or equipment required to be provided under the Contract which may be damaged, lost, stolen or otherwise degraded in any way prior to acceptance of the Work, except as provided in Section 6-10.

Guarantee periods shall not be affected by any payment but shall commence on the date of recordation of the "Notice of Completion."

If, within the time fixed by law, a properly executed notice to stop payment is filed with the Agency, due to the Contractor's failure to pay for labor or materials used in the Work, all money due for such labor or materials will be withheld from payment to the Contractor in accordance with applicable laws.

At the expiration of 35 days from the date of acceptance of the Work by the Board, or as prescribed by law, the amount deducted from the final estimate and retained by the Agency will be paid to the Contractor except such amounts as are required by law to be withheld by properly executed and filed notices to stop payment, or as may be authorized by the Contract to be further retained.

9-3.2 Partial and Final Payment. The Engineer will, after award of Contract, establish a closure date for the purpose of making monthly progress payments. The Contractor may request in writing that such monthly closure date be changed. The Engineer may approve such request when it is compatible with the Agency's payment procedure.

Each month, the Engineer will make an approximate measurement of the work performed to the closure date as basis for making monthly progress payments. The estimated value will be based on contract unit prices, completed change order work and as provided for in Section 9-2 of these General Provisions. Progress payments shall be made no later than thirty (30) calendar

days after the closure date. Five (5) working days following the closure date, the Engineer shall complete the detailed progress pay estimate and submit it to the Contractor for the Contractor's information. Should the Contractor assert that additional payment is due, the Contractor shall within ten (10) days of receipt of the progress estimate, submit a supplemental payment request to the Engineer with adequate justification supporting the amount of supplemental payment request. Upon receipt of the supplemental payment request, the Engineer shall, as soon as practicable after receipt, determine whether the supplemental payment request is a proper payment request. If the Engineer determines that the supplemental payment request is not proper, then the request shall be returned to the Contractor as soon as practicable, but not later than seven (7) days after receipt. The returned request shall be accompanied by a document setting forth in writing the reasons why the supplemental payment request was not proper. In conformance with Public Contract Code Section 20104.50, the City shall make payments within thirty (30) days after receipt of an undisputed and properly submitted supplemental payment request from the Contractor. If payment of the undisputed supplemental payment request is not made within thirty (30) days after receipt by the Engineer, then the City shall pay interest to the Contractor equivalent to the legal rate set forth in subdivision (a) of Section 685.010 of the Code of Civil Procedure.

From each progress estimate, 10 percent will be deducted and retained by the Agency, and the remainder less the amount of all previous payments will be paid. After 50 percent of the Work has been completed and if progress on the Work is satisfactory, the deduction to be made from remaining progress estimates and from the final estimate may be limited to $500 or 10 percent of the first half of total Contract amount, whichever is greater.

No progress payment made to the Contractor or its sureties will constitute a waiver of the liquidated damages under 6-9.

As provided in Section 22300 of the California Public Contract Code, the Contractor may substitute securities for any monies withheld by the Agency to ensure performance under the Contract.

After final inspection, the Engineer will make a Final Payment Estimate and process a corresponding payment. This estimate will be in writing and shall be for the total amount owed the Contractor as determined by the Engineer and shall be itemized by the contract bid item and change order item with quantities and payment amounts and shall show all deductions made or to be made for prior payments and amounts to be deducted under provisions of the contract. All prior estimates and progress payments shall be subject to correction in the Final Payment Estimate.

The Contractor shall have 30 calendar days from receipt of the Final Payment Estimate to make written statement disputing any bid item or change order item quantity or payment amount. The Contractor shall provide all documentation at the time of submitting the statement supporting its position. Should the Contractor fail to submit the statement and supporting documentation within the time specified, the Contractor acknowledges that full and final payment has been made for all contract bid items and change order items.

If the Contractor submits a written statement with documentation in the aforementioned time, the Engineer will review the disputed item within 30 calendar days and make any appropriate adjustments on the Final Payment. Remaining disputed quantities or amounts not approved by the Engineer will be subject to resolution as specified in Section 3-5, Disputed Work.

The written statement filed by the Contractor shall be in sufficient detail to enable the Engineer to ascertain the basis and amount of said disputed items. The Engineer will consider the merits of the Contractor's claims. It will be the responsibility of the Contractor to furnish within a reasonable time such further information and details as may be required by the Engineer to determine the facts or contentions involved in its claims. Failure to submit such information and details will be sufficient cause for denying payment for the disputed items.

9-3.2.1 Payment for Claims. Except for those final payment items disputed in the written statement required in Section 9-3.2 all claims of any dollar amount shall be submitted in a written statement by the Contractor no later than the date of receipt of the final payment estimate. Those final payment items disputed in the written statement required in Section 9-3.2 shall be submitted no later than 30 days after receipt of the Final Payment estimate. No claim will be considered that was not included in this written statement, nor will any claim be allowed for which written notice or protest is required under any provision of this contract including Sections 3-4 Changed Conditions, 3-5 Disputed Work, 6-6.3 Payment for Delays to Contractor, 6-6.4 Written Notice and Report, or 6-7.3 Contract Time Accounting, unless the Contractor has complied with notice or protest requirements.

The claims filed by the Contractor shall be in sufficient detail to enable the Engineer to ascertain the basis and amount of said claims. The Engineer will consider and determine the Contractor's claims and it will be the responsibility of the Contractor to furnish within a reasonable time such further information and details as may be required by the Engineer to determine the facts or contentions involved in its claims. Failure to submit such information and details will be sufficient cause for denying the claims.

Payment for claims shall be processed within 30 calendar days of their resolution for those claims approved by the Engineer. The Contractor shall proceed with informal dispute resolution under Section 3-5, Disputed Work, for those claims remaining in dispute.

9-3.3 Delivered Materials. The cost of materials and equipment delivered but not incorporated into the work will not be included in the progress estimate.

9-3.4 Mobilization. When a bid item is included in the Proposal form for Mobilization and subject to the conditions and limitations in the Specifications, the costs of work in advance of construction operations and not directly attributable to any specific bid item will be included in the progress estimate. When no such bid item is provided, payment for such costs will be considered to be included in the other items of work.

9-3.4.1 Mobilization and Preparatory Work. Payment for Mobilization and Preparatory Work will be made at the Contract price and includes full compensation for furnishing all insurance, bonds, licenses, labor, materials, utilities, tools, equipment and incidentals, and for doing all the work involved in mobilization and preparatory work and operations, including, but not limited to, those necessary for the movement of personnel, equipment, supplies, and incidental to preparing to conduct work on and off the project site and other offsite facilities necessary for work on the project; for all other facilities, sureties, work and operations which must be performed or costs incurred prior to beginning work on various contract items on or off the project site, excepting those specifically paid for under separate bid items. Such activities shall include, but are not limited to, coordination with Agency forces, securing permits, surveying and staking, preconstruction surveys, securing construction water supply, providing power necessary for construction, providing all temporary construction fencing; installing, maintaining and removing project signs; providing on-site sanitary facilities; posting OSHA requirements and

establishing safety programs, demobilization and any other work or services not included in any other bid item. This work also includes the cost for maintaining and submitting the project record drawings at the end of the project. These record drawings must be reviewed monthly with the Agency to receive progress or final payments for any work. The Contractor hereby agrees that the price paid is sufficient for Mobilization and Preparatory Work, as described in this section, and that the Contractor shall have no right to additional compensation for Mobilization and Preparatory Work.

Progress payments for Mobilization and Preparatory Work will be made as follows:

For the first progress payment (after the issuance of the Notice to Proceed), payment will be made at thirty percent (30%) of the amount bid for Mobilization and Preparatory Work. For the second progress payment, payment will be made at twenty percent (20%) of the amount bid for Mobilization and Preparatory Work. Also, for the second or subsequent progress payment in which the submittals for the generator set and the manual transfer switch are accepted by the Engineer, payment will be made at thirty percent (30%) of the amount bid for Mobilization and Preparatory Work. The remaining twenty (20%) of the amount bid for Mobilization and Preparatory Work will be made when all punch list items are signed-off and completed to the satisfaction of the City Inspector, and the Contractor has completely demobilized from the project site(s).

9-4 BID ITEMS. Payment for each Bid Item shall be made at the quantity and type as listed in the Contractor's Proposal. All work shown or mentioned on the plans, in the Contract Documents, General Provisions, or Technical Provisions/Specifications shall be considered as included in the Bid Items. Contractor must protect existing utilities, improvements, landscaping, irrigation systems, and vegetation in place. If damaged during the work, Contractor is responsible to repair or replace any utilities, improvements, landscaping, irrigation systems, and vegetation at his expense.

Mobilization
The contract price paid for this bid item shall constitute payment for all mobilization work in accordance with Section 9-3.4.

Permitting and Design Services
The contract price paid for this bid item shall constitute payment for all engineering and permitting services required to prepare and submit shop, working drawings, structural calculations, and power system studies; procuring necessary permits from the city's Building Department and San Diego County Air Pollution Control District (APCD) to construct and operate the proposed improvements; and all services for the start-up testing and commissioning of the completed Work. Specific requirements for permitting and design services are provided in the Project technical specifications.

The permit template for the city's Building Permit is provided in Appendix A. The Contractor shall complete all forms included in the template and submit to the Building Department Front Counter, per the directions provided within the template, at 1635 Faraday Avenue, Carlsbad CA. The city building permit fee has been waived. The Contractor shall submit the Hazardous Materials Questionnaire provided in the template to the San Diego County Department of Environmental Health Hazardous Materials Division (HMD) and San Diego County Air Pollution Control District (APCD) and pay all associated fees required to obtain approval from these departments.

Furnish and Install Temporary Back-Up Generator
The contract price paid for this bid item shall constitute payment to permit, furnish, install, test and operate a temporary back-up 250-kilowatt generator throughout the duration of the facility's permanent backup generator replacement.

Demolition
The contract price paid for this item constitutes payment for all demolition, removals and disposals of the existing generator set, building improvements, conduit, conductors, raceways, pavements, and appurtenances as shown or specified in the Contract Documents.

Furnish and Install Automatic and Manual Transfer Switches
The contract price paid for this item constitutes payment to furnish, install, and conduct start-up testing of the automatic and manual transfer switches, complete with all new conduit, conductors, raceways, concrete encasements, foundation, appurtenances, and associated earthwork as shown or specified in the Contract Documents.

Furnish and Install Generator Set (250-kW)
The contract price paid for this item constitutes payment to furnish, install, and conduct start-up testing of the new generator set, complete with structural anchorage system, hangers, supports, and ancillary systems including, but not limited to, controls, fuel, cooling, and exhaust systems.

Building & Civil Site Improvements
The contract price paid for this item constitutes payment to furnish and install the building and site improvements including ventilation systems, doors, drainage, and asphalt or Portland cement concrete pavements as shown or specified in the Contract Documents.

SUPPLEMENTAL PROVISIONS
TO
STANDARD SPECIFICATIONS FOR PUBLIC WORKS CONSTRUCTION
PART 2, CONSTRUCTION MATERIALS

SECTION 200 - ROCK MATERIALS

200-2 UNTREATED BASE MATERIALS

200-2.2 Crushed Aggregate Base.

200-2.2.1 General.
Add the following:

1. Samples for testing shall represent every 500 cubic yards or one day's production, whichever is less. If the results of the aggregate grading tests do not meet the grading requirements in Table 200-2.2.2 but meet the Quality Requirements specified in Table 200-2.2.3, placement of the aggregate base may be continued for the remainder of that day. However, another day's Work may not be started until test results indicate that the next material to be used in the Work will comply with the specified gradation and quality requirements.
2. If the results of both the aggregate grading and Sand Equivalent tests do not meet the requirements of Section 200-2.2, the aggregate base which is represented by these tests shall be removed. However, if requested by the Contractor, and approved at the sole discretion of the Engineer, the aggregate base may remain in place and the Contractor shall pay to the Agency $50 per cubic yard for such aggregate base left in place. The Agency may deduct this amount from any moneys due, or that may be come due, to the Contractor under the Contract.

SECTION 201 - CONCRETE, MORTAR, AND RELATED MATERIALS

201-1 PORTLAND CEMENT CONCRETE

TABLE 201-1.1.2(A) Modify as follows:

TABLE 201-1.1.2(A) (3)
PORTLAND CEMENT CONCRETE

Type of Construction	Concrete Class	Maximum Slump Inches
All Concrete Used Within the Right-of-Way	560-C-3250 (1)	(2)
Trench Backfill Slurry	190-E-400	8”
Street Light Foundations and Survey Monuments	560-C-3250	4”
Traffic Signal Foundations	590-C-3750	4”
Concreted-Rock Erosion Protection	520-C-2500P 310-C-17	per Table 300-11.3.1

(1) Except that concrete required to be of higher strength by Table 201-1.1.2(A) SSPWC shall be as per Table 201-1.1.2(A) SSPWC.
(2) As per Table 201-1.1.2(A) SSPWC.
(3) Portions of Table 201-1.1.2(A) of the Standard Specifications for Public Works Construction not shown herein as changed are not affected by this table.

201-1.2.4 Chemical Admixtures.
Substitute the following:

(d) Air-Entraining Admixtures. The air content shall not deviate from the percentage specified or permitted by more than 1-1/2 percentage points. The air content of freshly mixed concrete will be determined by California Test 504.

SECTION 203 - BITUMINOUS MATERIALS

203-6 ASPHALT CONCRETE

203-6.2.1. Asphalt Binder.
Add the following:
Wet Mix or Core sampled asphalt concrete will be considered in conformance with the mix design when the Asphalt Binder content is within +/-0.5% of the design mix and the gradation conforms to the grading as shown in Table 203-6.4.4. Deviations in gradation may be considered in conformance with the mix design provided the stability of the completed mix complies with the requirements for Hveem Stability per Table 203-6.4.4.

203-6.4 Asphalt Concrete Mixtures.
Add the following:
Conventional Asphalt concrete shall be class C2-PG64-10 for a surface course 2 inches in depth and B-PG64-10 for all base courses. Asphalt concrete shall be class D2-PG70-10 for dikes and class E-PG70-10 ditches.

203-6.4.4 Composition and Grading.
Add the following:
Evaluation of asphalt concrete shall be determined from samples of asphalt concrete taken after completion of all processing (Wet Mix) or by core sample analysis of the in-place asphalt concrete or by direct central plant inspection that confirms the production of a particular mix design and verifies using samples of aggregate taken before the addition of asphalt and mineral filler (Bin). All samples shall be taken in accordance with Calif. Test 125.

When Wet Mix or Core samples of asphalt concrete are to be used for evaluation, sufficient size samples shall be taken to ensure representative and adequate quantity of material for:

1. Asphalt Content and Gradation of Extraction using Calif. Test 382 or ASTM 2172, and Calif. Test 202.
2. Stability using:
   a. Hveem stability Value using Calif. Tests 304 and 366 shall be the average of three individual Values
   and/or
   b. Marshall Stability[1] in accordance with the Asphalt Institute's MS-2 fabricated and tested for traffic volume and shall be the average of three specimens.

[1]Only use Marshall Stability when the deviation between individual Hveem Stabilometer Values are greater than +/-5.

When using core sample analysis, the samples must be properly prepared to safeguard against influx of outside contaminates and so that the cut surfaces do not influence the test results.

The amount of asphalt binder used in asphalt concrete placed in dikes, gutters, gutter flares, overside drains and aprons at the ends of drainage structures shall be increased one percent by mass of the aggregate over the amount of asphalt binder determined for use in asphalt concrete placed on the traveled way.

Wet Mix or Core sampled asphalt concrete will be considered in conformance with the mix design when the asphalt content is within +/- .40 of the design mix and the gradation conforms to the grading as shown in Table 203-6.4.4. Deviations in gradation may be considered in conformance with the mix design provided the stability of the completed mix complies with the requirements for Hveem Stability per Table 203-6.4.4.

SECTION 213 - ENGINEERING GEOSYNTHETICS

213-5 GEOTEXTILES AND GEOGRIDS

Add the following section:
213-5.1 General. Geotextile types shall be used for the applications listed in Table 213-5.1.

Table 213-5.1
GEOTEXTILE APPLICATIONS

Application of Geotextile	Type Designation
Separation of Soil and Street Structural Section	90WS
Separation of Soil and Subsurface Aggregate Drain	180N
Reinforcement of Street Structural Section	200WS
Remediation and Separation of Soil	270WS
Reinforcement of Soil	270WS
Drainage at the Interface of Soil Structures	N/A
Drainage at the Interface of Soil and Structures	N/A
Rock Slope Protection Fabric for Rock Sizes Below 225 kg (¼ Ton)	180N
Rock Slope Protection Fabric for Rock Sizes Including and Above 225 kg (¼ Ton)	250N
Plant Protection Covering	90N
Erosion Control Fence with 14 AWG - 150 mm x 150 mm (6”x6”) Wire and 3 m (10’) Post Spacing	90WS
Erosion Control Fence with 1.8 m (6’) Post Spacing and No Wire Fencing	200WS

Add the following section:
213-5.2 Erosion Control Specialties. Storm water erosion control plans shall be prepared, implemented, and maintained by individuals with the respective qualifications and certification as specified in the City of Carlsbad Engineering Standards Volume 4.

Add the following section:
213-5.3 Gravel bags. Gravel bags for the use of temporary erosion control shall be burlap type, filled with no less than 23kg (50lbs) of 19 mm ($^3/_4$") crushed rock and securely tied closed. Plastic bags are not acceptable.

SECTION 300 – EARTHWORK

Add the following section:
300-2.10 Grading Tolerance. The Contractor shall finish excavated areas other than slopes and subgrade below structures, within the roadway and sidewalk areas within 30 mm (0.1') of the grades shown on the plans. Subgrade tolerances shall conform to the requirements of section 301-1.4.

Add the following section:
300-12 STORM WATER POLLUTION PREVENTION PLAN

300-12.1 Storm Water Pollution Prevention Plan. As part of the storm water pollution prevention work, the Contractor shall prepare and submit Storm Water Pollution Prevention Plan, hereafter referred to as the "SWPPP,". The SWPPP shall conform to the requirements of the City of Carlsbad Engineering Standards Volume 4 "*SWPPP Manual",* "Greenbook" Standard Specifications for Public Works Construction, the requirements in the California Storm Water Quality Association, Stormwater Best Management Practice Handbook, Construction ("Handbook"), the requirements of the Permit, the requirements in the plans and these supplemental provisions.

300-12.2 SWPPP Document. Within 15 calendar days after the execution of the contract, the Contractor shall submit 3 copies of the SWPPP to the Engineer, in accordance with Section 2-5.3. If revisions are required, the Contractor shall revise and resubmit the SWPPP within 15 days of receipt of the Engineer's comments and shall allow 5 days for the Engineer to review the revisions. Upon the Engineer's acceptance of the SWPPP, 3 additional copies of the SWPPP, incorporating the required changes, shall be submitted to the Engineer.

The objectives of the SWPPP shall be to identify pollution sources that may adversely affect the quality of storm water discharges associated with the project and to identify, construct, implement and maintain storm water pollution prevention measures, hereafter referred to as control measures, to reduce to the extent feasible pollutants in storm water discharges from the construction site both during and after construction is completed under this contract.

The SWPPP shall incorporate control measures in the following categories:

1. Soil stabilization practices;
2. Sediment control practices;
3. Wind erosion control practices;
4. Non-storm water management and waste management and disposal control practices; and
5. Daily street sweeping

Specific objectives and minimum requirements for each category of control measures are contained in the Handbook.

The Contractor shall designate a Water Pollution Control Manager who will have the responsibilities outlined in the SWPPP.

The SWPPP shall include, but not be limited to, the following items as described in the SWPPP:

1. Source Identification;
2. Erosion and Sediment Controls;
3. Non-Storm Water Management;
4. Waste Management and Disposal;
5. Maintenance, Inspection and Repair;
6. Training;
7. List of Contractors and Subcontractors;
8. Post-Construction Storm Water Management;
9. Preparer;
10. Copy of the local permit;
11. BMP Consideration Checklist;
12. SWPPP Checklist;
13. Schedule of Values; and
14. Storm Water Pollution Prevention Drawings.

The Contractor shall amend the SWPPP, graphically and in narrative form, whenever there is a change in construction activities or operations which may affect the discharge of significant quantities of pollutants to surface waters, ground waters, municipal storm drain systems, or when deemed necessary by the Engineer. The SWPPP shall also be amended if it is in violation of any condition of the Permit or has not effectively achieved the objective of reducing pollutants in storm water discharges. Amendments shall show additional control measures or revised operations, including those in areas not shown in the initially accepted SWPPP, which are required on the project to control water pollution effectively. Amendments to the SWPPP shall be submitted for review and acceptance by the Engineer in the same manner specified for the initially accepted SWPPP. Accepted amendments shall be dated and logged in the SWPPP. Upon acceptance of the amendment, the Contractor shall implement the additional control measures or revised operations.

The Contractor shall keep a copy of the accepted SWPPP and accepted amendments at the project site. The SWPPP shall be made available upon request of a representative of the Regional Water Quality Control Board, State Water Resources Control Board, U.S. Environmental Protection Agency or local storm water management agency. Requests by the public shall be directed to the Engineer.

300-12.3 SWPPP Implementation. Upon acceptance of the SWPPP, the Contractor shall be responsible throughout the duration of the project for installing, constructing, inspecting and maintaining the control measures included in the SWPPP and any amendments thereto and for removing and disposing of temporary control measures. Unless otherwise directed by the Engineer or specified in these supplemental provisions, the Contractor's responsibility for SWPPP implementation shall continue throughout any temporary suspension of work ordered in accordance with Section 6-3, "Suspension of Work". Requirements for installation, construction, inspection, maintenance, removal and disposal of control measures are specified in the “Handbook” and these supplemental provisions.

Soil stabilization practices and sediment control measures, including minimum requirements, shall be provided throughout the rainy season, defined as between October 1 and April 30.

Implementation of soil stabilization practices and sediment control measures for soil-disturbed areas of the project site shall be completed, except as provided for below, no later than 20 days prior to the beginning of the rainy season or upon start of applicable construction activities for projects which begin either during or within 20 days of the rainy season.

The Contractor shall implement, year-round and throughout the duration of the project, control measures included in the SWPPP for sediment tracking, wind erosion, non-storm water management and waste management and disposal.

The Engineer may order the suspension of construction operations, at the Contractor's cost, which create water pollution if the Contractor fails to conform to the requirements of this section as determined by the Engineer.

300-12.4 Maintenance. To ensure the proper implementation and functioning of control measures, the Contractor shall regularly inspect and maintain the construction site for the control measures identified in the SWPPP, as described in Section 7-8. The Contractor shall identify corrective actions and time frames to address any damaged measures or reinitiate any measures that have been discontinued.

The construction site inspection checklist provided in the "Handbook" shall be used to ensure that the necessary measures are being properly implemented, and to ensure that the control measures are functioning adequately. The Contractor shall submit one copy of each site inspection record to the Engineer, within two days of the inspection.

During the rainy season, inspections of the construction site shall be conducted by the Contractor to identify deficient measures, as follows:

1. When the five-day rain probability forecast exceeds forty percent (40%).
2. After any precipitation which causes runoff capable of carrying sediment from the construction site;
3. At 24-hour intervals during extended precipitation events; and
4. Routinely, at a minimum of once every week.

If the Contractor or the Engineer identifies a deficiency in the deployment or functioning of an identified control measure, the deficiency shall be corrected by the Contractor immediately, or by a later date and time if requested by the Contractor and accepted by the Engineer in writing, but not later than the onset of subsequent precipitation events. The correction of deficiencies shall be at no additional cost to the City.

300-12.5 Payment. The contract lump sum price paid for the SWPPP work shall include full compensation for the design, submittal, obtaining approval, and amending the Tier 2 SWPPP and for furnishing all labor, materials, tools, equipment, and incidentals to install, implement, maintain and remove construction BMPs per the approved SWPPP. The most recent Tier 2 construction SWPPP Template is available on the City Website and an example is included in Appendix "B".

Partial payment shall be based on the percentage of the total value of work completed.

SECTION 301 - SUBGRADE PREPARATION, TREATED MATERIALS AND PLACEMENT OF BASE MATERIALS

301-1 SUBGRADE PREPARATION

301-1.2 Preparation of Subgrade.
Modify the second and third paragraphs as follows:
Change each instance reading “6 inches” to “12 inches”.

301-1.3 Relative Compaction.
Delete the first paragraph and substitute the following:
The Contractor shall compact the upper 300 mm (12”) of subgrade beneath areas to be paved, have base or subbase material placed on them (including pipelines), or curb, gutter, curb and gutter, alley pavement, driveway, sidewalk constructed over them, to no less than 95 percent maximum dry density as determined by ASTM D1557.

301-1.7 Payment.
Modify the first paragraph as follows:
Payment for subgrade preparation shall be incidental to the contract bid price for which the subgrade is prepared and shall include all labor, materials; including water, operations and equipment to scarify, adjust moisture, compact or recompact the subgrade, both in cut areas and in fill areas, and no further compensation will be allowed.

SECTION 302 - ROADWAY SURFACING

302-5 ASPHALT CONCRETE PAVEMENT

Add the following section:
302-5.2 Pavement Transitions. The Contractor shall ramp the approaches and termini to all structures and vertical joints in the cold-milled area which are transverse to through traffic with temporary asphalt concrete pavement as specified in Section 306-13.1. Ramps shall be constructed the same day as cold milling and removed the same day as permanent paving. Ramp dimensions and compaction shall be as approved by the Engineer.

302-5.4 Tack Coat. Add the following: If the asphalt concrete pavement is being constructed directly upon an existing hard-surfaced pavement, a tack coat of PG 64-10 paving asphalt at a rate of 0.05 gallon per square yard or SS-1h emulsion at a rate between 0.05 and 0.10 gal/SY shall be uniformly applied upon the existing pavement preceding the placement of the asphalt concrete.

The contact surfaces of all cold pavement joints, curbs, gutters, manholes, and the like shall be painted with PG 64-10 paving asphalt, or SS-1h emulsion, immediately before the adjoining asphalt concrete is placed.

The Contractor shall place a tack coat between the successive interfaces of existing pavement and new asphalt concrete.

302-5.5 Distribution and Spreading.
Add after the second sentence of sixth paragraph:
The Contractor shall provide the self-propelled spreading and finishing machine used to construct the asphalt concrete surface course with an automatic screed control. The automatic screed control shall be 5.5 m (18') minimum length. The paving machine shall be operated by an operator and two full-time screed men during all paving. The Contractor shall provide an on-site backup paving during all paving operations. No conveyor belt systems will be allowed for moving the AC. No AC windrows will be allowed. Only a surge volume/remix material transfer vehicle (MTV) is allowed to receive the AC from the haul trucks and then place it in the self-propelled spreading and finishing machine. If the Engineer determines the use of the MTV is not practical for a portion of the project, the Engineer may waive its requirement for that portion.

302-5.6.1 General.
Add to the second paragraph, Part (2):
Pinched joint rolling procedures shall be required, and vibratory rollers shall be limited to breakdown, unless otherwise directed by the Engineer.

Add after the last paragraph:
Unless directed otherwise by the Engineer, the initial breakdown rolling shall be followed by a pneumatic-tired roller as described in this section.

302-5.9 Measurement and Payment. Replace the first sentence with the following: Payment for pavement resurfacing shall be made at the unit bid price for the item requiring such work.

Add the following section:
302-15 PUBLIC CONVENIENCE AND TRAFFIC CONTROL

The Contractor shall schedule the work so as to prevent damage by all traffic. The Contractor shall not schedule work so as to conflict with trash pickup. The trash hauling schedule can be obtained by calling the city's contracted waste company. The Contractor shall accommodate mail delivery to residences and businesses during the work.

At least two weeks prior to work, Contractor shall send, by first class mail, notification letters to all property addresses on which resurfacing shall occur. Obtaining the appropriate addresses shall be the Contractor's responsibility. A sample letter shall be provided by the city and the Contractor shall use the city's sample letter and modify it with the appropriate street names, dates, times, and phone numbers specific to the work.

The limits and sequencing of the Contractor's resurfacing operations shall impact no more than 900 lineal feet of street or curb-side parking for residents and business on any given day.

Seventy-two hours prior to the start of any construction in the public right-of-way that affects vehicular traffic and/or parking or pedestrian routes, the Contract shall give written notification of the impending disruption via door hangers. For a full street closure, all residences and/or businesses on the affected street or alley shall be notified. For partial street closures, or curb, sidewalk and driveway repairs, the residences and/or businesses directly affected by the work shall be notified.

The Contractor shall deliver the advance notification door hanger which shall state the date and time the work will begin and its anticipated duration. The notification shall list two telephone numbers that may be called to obtain additional information. One number shall be the

Contractor's permanent office or field office and the other number shall be a 24-hour number answered by a representative of the Contractor who is knowledgeable about the project. At least one of the phone numbers shall be in the 760 area code. An answering machine shall not be connected to either number. The notification shall also give a brief description of the work and simple instructions to the home or business owner on what they need to do to facilitate the construction. The Contractor shall use the sample door hanger provided by the city and submit door hangars to the Inspector for approval. Notices shall not be distributed until approved by the Inspector.

The notification shall be pre-cut in a manner that enables it to be affixed to a doorknob without adhesives. It shall be a minimum size of 4 inches by 8-1/2 inches and shall be brightly colored with contrasting printing. The material shall be equivalent in strength and durability to 65-lb card stock. The printing on the notice shall be no smaller than 12-point. The door hanger shall list the street name, date, time, phone numbers, and appropriate information specific to the work.

The preparation, materials, printing and distribution of the notifications shall be included in the contract price for the Work requiring such notifications and no separate or additional payment shall be made.

SECTION 303 CONCRETE AND MASONRY CONSTRUCTION.

303-1 CONCRETE STRUCTURES

303-1.2 Subgrade for Concrete Structures.

Add the following:
If groundwater is encountered, Contractor shall work a minimum 2' deep of ¾" gravel into soil to provide an adequate base for construction of concrete structure.

303-1.11 Measurement.

Delete the subsection in its entirety and replace with the following:
Concrete structures will be measured for payment by each structure installed as specified in the bid schedule and in accordance to the plan and any referenced standard drawings.

303-1.12 Payment.

Delete the subsection in its entirety and replace with the following:
Payment for concrete structures will be made as set forth in the Bid Schedule. Payment shall include compensation for furnishing all labor, materials, tools, and equipment necessary to construct the concrete structures complete in place. Items shall include submittal of PCC mix design for approval, structure excavation, subgrade and base preparation, furnishing PCC and casting-in-place, steel reinforcement, forms, covers, rims, grates, frames, collars, cone and draft sections, bases, steps, clean up; and for all other work necessary to install the concrete structure, complete in place, and no additional compensation will be allowed therefor.

303-5 CONCRETE CURBS, WALKS, GUTTERS, CROSS GUTTERS, ALLEY INTERSECTIONS, ACCESS RAMPS, AND DRIVEWAYS.

303-5.1.1 General.

Add the following:
Portland Cement Concrete construction shall include, but not limited to, curbs, walkways, cross gutters, access ramps, driveways, concrete curb outlet, terrace ditches, and all other miscellaneous PCC construction items as indicated on the plans and per these Specifications.

Removal of adjacent asphalt concrete and aggregate base removal associated with concrete curb construction shall be replaced with full depth asphalt concrete with a minimum width of one foot perpendicular to the face of concrete edge. The replaced section shall conform to the requirements of Sections 203-6, 302-5, 401-3 and match the depth of the adjacent concrete gutter.

The Contractor shall verify with a “smart level”, string line and/or water testing that positive drainage is maintained upon completion of finishing, and any irregularities causing water ponding shall be corrected and refinished. The CITY shall be present to verify the concrete forms, prior to pouring any PCC construction improvements.

303-5.5.2 Curb.
Add the following:
The Contractor shall stamp the curb face with 75 mm (3”) high block letters directly above the point that it is crossed by underground facilities with the marking specified in Table 303-5.5.2(A)

TABLE 303-5.5.2(A)
Curb Face Markings

Type of underground facilities	Marking
Water Service Lateral	**W**
Sewer Service Lateral	**S**
Irrigation Water Lateral or Sleeve	**RW**

303-5.9 Measurement and Payment.
Add the following:
Curb and gutter, and curb, shall be considered as continuing across driveways, access ramps and drainage inlets when constructed adjacent thereto. Neither curb and gutter nor curb will be paid for across the length of local depressions, except that which occurs in gutter transitions at each side of an inlet.

SECTION 306 – OPEN TRENCH CONDUIT CONSTRUCTION

306-3 TRENCH EXCAVATION

Add the following:
306-3.1 General. When the actual elevation or position of any existing pipe, conduit, or other underground appurtenances cannot be determined without excavation, the Contractor shall excavate and expose the existing improvement at the location shown on the Plans and any other locations deemed necessary by the Engineer. Such excavation shall be considered as part of the excavation necessary for the work. The Engineer shall be given the opportunity to inspect the existing improvements when it is exposed. Any adjustments in line or grade which may be necessary to accomplish the intent of the plans shall be made at no additional costs.

Add the following:
306-3.2 Removal of Surface Improvements.

Add the following:
Bituminous pavement, concrete pavement, curbs, sidewalks, or driveways removed in connection with construction shall be removed in accordance with Subsection 401 of the Standard Specifications and these Special Provisions and reconstructed in-kind.

306-3.5 Maximum Length of Open Trench.
Delete the first sentence for the first paragraph and replace with the following:
Except by permission of the Engineer, the maximum length of open trench where prefabricated pipe is used shall be the distance necessary to accommodate the amount of pipe installed in a single day.

306-12 BACKFILL

306-12.1 General.
Add the following:
The Contractor shall install detectable underground utility marking tape above each or, in the case of bundled underground conduit of the same type, the upper underground conduit being installed by the open trench method.

Delete the following section in its entirety and replace with the following:
306-12.3.2 Compaction Requirements. The Contractor shall densify trench backfill to a minimum of 90 percent relative compaction except that in the top 915 mm (36”) of the street right-of-way, compaction shall be 95 percent.

306-13 TRENCH RESURFACING

306-13.1 Temporary Resurfacing.
Add the following:
Temporary bituminous resurfacing materials which are placed by the Contractor are for its convenience and shall be at no cost to the Agency. Temporary bituminous resurfacing materials shall be used in lieu of permanent resurfacing only when approved by the Engineer. When temporary bituminous resurfacing materials are used in lieu of permanent resurfacing it shall be removed and replaced with permanent resurfacing within 7 days of placement. No additional payment will be made for temporary bituminous resurfacing materials. The price bid for the associated conduit or structure shall include full compensation for furnishing, placing, maintaining, removing, and disposing of such temporary resurfacing materials.

306-13.2 Permanent Resurfacing.
Add the following:
Except as provided in section 306-13.1, “Temporary Resurfacing,” the Contractor shall perform permanent trench resurfacing within 24 hours after the completion of backfill and compaction of backfill and aggregate base materials.

SECTION 400 – PROTECTION AND RESTORATION

400-1 GENERAL
Add the following:
The Contractor shall replace all pavement striping, markings and markers which are not designated for removal and are damaged as a result of its operations.

400-2 PERMANENT SURVEY MARKERS
Delete the second paragraph and subparagraphs a), b) and c).

400-3 PAYMENT.
Delete in its entirety and replace with the following:
No separate or additional payment will be made for 1) protection of existing improvements, and 2) restoration of existing improvements.

No separate or additional payment will be made to restore permanent survey makers.

SECTION 401 – REMOVAL

401-3 CONCRETE AND MASONRY IMPROVEMENTS

401-3.2 Concrete Curb, Walk, Gutters, Cross Gutters, Curb Ramps, Driveway and Alley Intersections.
Delete the third and fourth sentence and add the following:
All existing concrete shall be removed to the nearest joint. Concrete shall be removed to neatly sawed edges with saw cuts made to a depth deep enough to produce a clean straight break without loosening, cracking or damaging adjoining improvements. PCC and all other material unsuitable for use as fill, as determined by the Engineer, shall be removed from the right-of-way and disposed of by the Contractor at a site of his own choice and shall pay all costs incidental to the disposal.

Add the following section:
401-3.2.1 Adjacent Asphalt Concrete Removal. Removal of asphalt concrete and aggerate base associated with concrete driveway, ramp and curb and gutter construction shall be replaced with full depth asphalt concrete to a minimum width of one foot perpendicular from face of nearest concrete edge. Removal of adjoining asphalt section and the full depth replacement is incidental to the concrete curb and gutter work as described in section 303-5.

SUPPLEMENTAL PROVISIONS
TO
STANDARD SPECIFICATIONS FOR PUBLIC WORKS CONSTRUCTION

PART 6 TEMPORARY TRAFFIC CONTROL

SECTION 601 – TEMPORARY TRAFFIC CONTROL FOR CONSTRUCTION AND MAINTENANCE WORK ZONES

Add the following section:
601-1.2 Payment.

The Contract price paid for Temporary Traffic Control shall include full compensation for, but not limited to, design, submittal and approval of the temporary traffic control plan (TCP) and furnishing all labor, materials, tools, equipment, and incidentals for storing, placing, maintaining, moving to new locations, replacing and removing all traffic control zone devices including flaggers, construction area signs and signage, channelizing devices including traffic barriers and end treatments, traffic sign enhancement devices including portable changeable message signs and flashing arrow signs, temporary traffic striping and pavement markings and as shown on the Plans or approved TCP and in accordance with the Contract Documents.

Full compensation for removing and salvaging the traffic control equipment and materials that are to be reused or reset in the Work shall be considered included in the Contract price paid for Temporary Traffic Control and no additional compensation will be allowed therefor.

Progress payments for Temporary Traffic Control shall be based on the percentage of the total value of work completed.

601-3 TEMPORARY TRAFFIC CONTROL (TTC) ZONE DEVICES

601-3.1 General.
Add the following:
The Contractor shall furnish and install temporary traffic pavement markers, channelizers, signage, railing (type K), barriers, crash cushions and end treatments for railings and barriers at the locations shown on the Plans or the approved TCP and as required by the Contract Documents.

Add the following section:
601-3.4.1 General.
Add the following:
If temporary traffic signs are displaced or overturned by any cause during the progress of the Work, the Contractor shall immediately replace the signs in their approved locations. The Contractor shall maintain all temporary traffic signs used in the Work in a clean, reflective and readable condition. The Contractor shall replace or restore graffiti marked temporary traffic signs and posts used in the Work within 8 hours of such discovery.

In the event that the Contractor fails to install and/or maintain barricades or such other traffic signs, markings, delineation or devices, the Engineer may, at his/her sole option, may correct the deficiency and charge the Contractor fifty dollars ($50.00) per day per traffic sign or device, or the actual cost of providing such traffic control facility, whichever is greater.

601-3.5 Signs and Signage

601-3.5.1 General.
Delete in its entirety and replace with the following:
Unless otherwise specified, signs shall conform to the California MUTCD. Portable signs shall consist of a base, standard or framework, and a sign panel and conform with applicable provisions for portable signs in Caltrans Standard Specification 12-3.11. Sign units shall be capable of being delivered to the Work site and placed into immediate operation. The Contractor shall provide and install all temporary traffic control signs, markers, markings, and delineators at locations shown on plans and specified herein.

Signage shall include all temporary signs required for the direction of traffic through or around the Work site. Sign placement shall conform to the California MUTCD and the TCP.

Temporary “No Parking” and “No Stopping” signs shall be installed at least 24 hours before enforcement. Public notification of temporary “No Parking” restriction shall be posted at least 72 hours before enforcement of the “No Parking” zone. The notification shall state the date and time of parking restriction for a duration not to exceed the time necessary to complete the Work at that location. Failure to meet the date so indicated will require re-posting the notification in advance of the rescheduled Work.

601-3.5.2 Payment.
Modify this section as follows:
Payment for signs and signage shall be included in the contract price for Temporary Traffic Control as specified in Section 601-2.2.

601-3.6 Channelizing Devices

601-3.6.1 General.
Replace this section with the following:
Channelizers shall be new surface-mounted type and shall be furnished, placed, and maintained at the locations shown on the plans. Channelizer posts shall be orange in color. Channelizers shall have affixed white reflective sheeting as specified in the special provisions. The reflective sheeting shall be 75 mm x 300 mm (3” x 12”) in size. The reflective sheeting shall be visible at 300 m (1000’) at night under illumination of legal high beam headlights, by persons with vision of or corrected to 20/20. The channelizer bases shall be cemented to the pavement in the same manner as provided for cementing pavement markers to pavement in Section 312-1, “Placement.” Channelizers shall be applied only on a clean, dry surface. Channelizers shall be placed on the alignment and location shown on the plans and as directed by the Engineer. The channelizers shall be placed uniformly, straight on tangent alignment and on a true arc on curved alignment. All layout work necessary to place the channelizers to the proper alignment shall be performed by the Contractor. If the channelizers are displaced or fail to remain in an upright position, from any cause, the channelizers shall immediately be replaced or restored to their original location, by the Contractor. The Contractor shall provide the Engineer with a Certificate of Compliance in accordance with the provisions of Section 4-1.5, "Certification”. Said certificate shall certify that the channelizers comply with the plans and specifications and

conform to the prequalified design and material requirements approved by the Engineer and were manufactured in accordance with a quality control program approved by the Engineer.

Add the following subsection:
601-3.6.5.1 Temporary Railing and Crash Cushions. Temporary railing (Type K) shall consist of interconnected new or undamaged used precast concrete barrier units as shown on the plans. Temporary sand-filled crash cushions shall consist of new or undamaged used temporary sand-filled crash cushions units as shown on the plans.

Add the following subsection:
601-3.6.5.2 Appearance. Exposed surfaces of new and used units of temporary railing (Type K) shall be freshly coated with a white color paint prior to their first use on the project. The paint shall conform to the provisions in sections 210-1.5 “Paint Systems” and 310 “Painting”. Contractor shall be responsible for the removal and cleanup or painting over the graffiti from the K-Rails within 48 hours. The Contractor shall replace or repaint units of temporary railing (Type K) or shall remove graffiti, tire or vehicle marks, dirt or other materials that mar the appearance when ordered by the Engineer.
Add the following subsection:

601-3.6.5.3 Manufacture of Temporary Railing. In addition to the requirements herein, the temporary railing (Type K) shall be manufactured per Caltrans Standard Drawing T3. Concrete used to manufacture Temporary railing (Type K) shall conform to the provisions in sections 201-1, “Portland Cement Concrete” and 303-1 “Concrete Structures”. Load tickets and a Certificate of Compliance will not be required. Reinforcing steel shall conform to Section 201-1, “Portland Cement Concrete” and Section 303-1 “Concrete Structures”. Steel bars to receive bolts at ends of concrete panels shall conform to ASTM A36/A36M. The bolts shall conform to ASTM A307. A round bar of the same diameter may be substituted for the end-connecting bolt shown on the plans. The bar shall conform to ASTM A36/A36M, shall have a minimum length of 660 mm and shall have a 75 mm (3”) diameter by 9 mm (3/8”) thick plate welded on the upper end with a 5 mm (3/16”) fillet weld. The final surface finish of temporary railings (Type K) shall conform to the provisions in Section 303-1.9.2 “Ordinary Surface Finish.” Exposed surfaces of concrete elements shall be cured by the water method, the forms-in-place method, or the pigmented curing compound method. The pigmented curing compound shall be type 2 curing compound. Temporary railing (Type K) may have the Contractor’s name or logo on each panel. The name or logo shall not be more than 100 mm in height and shall be located not more than 300 mm above the bottom of the rail panel.

Add the following subsections:
601-3.6.5.4 Installation of Temporary Railing. In addition to the requirements herein, the temporary railing (Type K) shall be installed per Caltrans Standard Drawing T3. Temporary railing (Type K) shall be set on firm, stable foundation. The foundation shall be graded to provide a uniform bearing throughout the entire length of the railing. Abutting ends of precast concrete units shall be placed and maintained in alignment without substantial offset to each other. The precast concrete units shall be positioned straight on tangent alignment and on a true arc on curved alignment. Each rail unit placed within 3 m (10’) of a traffic lane shall have a reflector installed on top of the rail as directed by the Engineer. Reflectors and adhesive will be furnished by the Contractor. A Type P marker panel conforming to the requirements of the Federal Highway Administration (FHWA) Manual on Uniform Traffic Control Devices (MUTCD) 2009 Edition as amended by the MUTCD 2009 California Supplement shall also be installed at each end of railing installed adjacent to a two-lane, two-way highway and at the end facing traffic of railing installed adjacent to a one-way roadbed. If the railing is placed on a skew, the

marker shall be installed at the end of the skew nearest the traveled way. Type P marker panels shall conform to the provisions of Section 206-7.2, “Temporary Traffic Signs”. Where shown on the plans, threaded rods or dowels shall be bonded in holes drilled in existing concrete. When temporary railings (Type K) are removed, any area where temporary excavation or embankment was used to accommodate the temporary railing shall be restored to its previous condition or constructed to its planned condition.

601-3.6.5.5 Temporary Sand-Filled Crash Cushions. Temporary sand-filled crash cushion units shall be selected from the latest Caltrans Authorized Material List for highway safety features and shall meet NCHRP 350 standards. Other features will be suitability to application, operational characteristics, durability and other such characteristics that the Engineer shall determine. Temporary sand-filled crash cushions (TSFCC) shall be of the type and array configurations shown on plans, and installed at every end of, or gap in, the temporary railing (Type K) whenever the closest point of approach of traffic, regardless of direction, is 4.6 m (15’) or less to the end of the temporary railing (Type K) being considered. The TSFCC shall be installed per Caltrans Standard Drawings T1 and T2 for approach speeds no less than the posted speed of the street prior to construction or 55 kilometers per hour (35 mph), whichever is the greater. The TSFCC array shall be appropriate to the application as shown on said standard drawings. A Type J and/or P marker panel conforming to the requirements of the Federal Highway Administration (FHWA) Manual on Uniform Traffic Control Devices (MUTCD) 2009 Edition as amended by the MUTCD 2009 California Supplement shall also be installed at each TSFCC array as shown in Caltrans Standard Drawings T1 and T2. Particular care shall be taken to assure that crash cushions are installed with the soil supporting them and the adjacent soil leveled to match the elevation of the bottom of the temporary railing immediately adjacent to the crash cushion. All routes of approach to the TSCFF array shall be graded such that any vehicle diverging from the travelled way to strike the TSCFF will travel on a vertical alignment parallel to the segment of the travel lane that it departed from.

601-3.7.5 PORTABLE CHANGEABLE MESSAGE SIGNS (PCMS)

Add the following:

601-3.7.5.1 General. Each portable changeable message sign (PCMS) unit shall consist of a controller unit, a power supply, and a structural support system all mounted on a trailer. The PCMS unit shall be assembled to form a complete self-contained portable changeable message sign, which can be delivered to the site of the work and placed in immediate operation. The complete PCMS unit shall be capable of operating in an ambient air temperature range of -20ºC (-4ºF) to +70ºC (158ºF) and shall not be affected by unauthorized mobile radio transmissions.

The trailer shall be equipped so that it can be leveled and plumbed. Full operation height shall be with the bottom of the sign at least 2.1 m (7') above the ground and the top no more than 4.4 m (14.5') above the ground. After initial placement, PCMS shall be moved from location to location as directed by the Engineer.

601-3.7.5.2 Message Board. The message displayed on the PCMS shall be visible from a distance of 460 m (1500') and shall be legible from a distance of 230 m (750'), at noon on a cloudless day, by persons with vision corrected to 20/20. The sign panel shall be 3-line matrix and shall display not less than 7 characters per line. Sign messages to be displayed shall be as approved by the Engineer. The sign face shall be flat black and shall be protected from glare of the sun by a method which does not interfere with the clarity of the sign message. The sign shall be raised and lowered by means of a power driven lifting mechanism. The matrix sign shall be capable of complete alphanumeric selection.

Lamp matrix type signs shall be equipped with an automatic dimming operational mode that automatically compensates for the influence of a temporary light source or other abnormal lighting conditions. The sign shall have manual dimming operation modes of 3 or more different lamp intensities.

Matrix signs not utilizing lamps shall be either internally or externally illuminated at night.

The controller shall be an all solid-state unit containing all the necessary circuitry for the storage of at least 5 pre-programmed messages. The controller shall be installed in a location allowing the operator to perform all functions from one position. A keyboard entry system shall be provided to allow an operator to generate an infinite number of additional messages over the pre-programmed stored messages. The keyboard shall be equipped with a security lockout feature to prevent unauthorized use of the controller. The controller shall contain a nonvolatile memory to hold the keyboard created messages in memory during periods when the power is not activated. The controller shall provide for a variable message display rate which allows the operator to match the information display to the speed of the approaching traffic. The flashing off time shall be operator adjustable within the control cabinet.

601-3.7.5.3 Operation and Maintenance. PCMS shall be furnished, placed, operated, and maintained at locations shown on the plans, specified herein, or designated by the Engineer. The PCMS will be diligently maintained and repaired by the Contractor throughout the project in accordance with the manufacturer's recommendations. When ownership is transferred to the City (at the end of the job), it must be demonstrated to be in good working condition, and meet the provisions of these specifications, including current registration.

601-3.7.5.4 Measurement and Payment. Payment for all traffic signs, including Portable Changeable Message Signs, are incidental to the bid item for Temporary Traffic Control and no other compensation will be made therefor.

601-4 TEMPORARY TRAFFIC STRIPING AND PAVEMENT MARKINGS

601-4.2.1 Application of Temporary Pavement Markers. Temporary reflective raised pavement markers shall be placed in accordance with the manufacturer's instructions. Temporary reflective raised pavement markers shall be cemented to the surfacing with the adhesive recommended by the manufacturer, except epoxy adhesive shall not be used to place temporary reflective raised pavement markers in areas where removal of the markers will be required. Pavement striping, legends and markers which conflict with any traffic pattern shall be removed by grinding as determined by the Engineer. The Contractor shall use temporary reflective raised pavement markers for temporary pavement marking, except when the temporary pavement markers are used to replace patterns of temporary traffic stripe that will be in place for less than 30 days. Reflective pavement markers used in place of the removable-type pavement markers shall conform to the Section 314-3 *Removal of Pavement Markers* and Section 314-5 *Pavement Markers*, except the 14-day waiting period before placing the pavement markers on new asphalt concrete surfacing as specified in Section 314-5.4 *Placement*, shall not apply; and epoxy adhesive shall not be used to place pavement markers in areas where removal of the markers will be required.

Technical Specifications

CITY OF CARLSBAD
POINSETTIA LIFT STATION
GENERATOR REPLACEMENT
PROJECT NO. 3840-23

TECHNICAL SPECIFICATIONS

The Technical Specifications were prepared under the direction of Professional Engineers, registered in the State of California, whose seals and signatures appear below.

PROJECT MANAGER	LEAD CIVIL
REGISTERED PROFESSIONAL ENGINEER TIMOTHY WATERS No. C86080 Exp. 9/30/24 CIVIL STATE OF CALIFORNIA Signed: 11/22/2023	REGISTERED PROFESSIONAL ENGINEER JOSE A. CUEVAS No. C63541 Exp. 9/30/2024 CIVIL STATE OF CALIFORNIA Signed: 11/22/2023
LEAD STRUCTURAL	**LEAD MECHANICAL**
REGISTERED PROFESSIONAL ENGINEER BOURDANIOTIS S 6474 EXP: 03/31/2024 signed: 11/22/2023 STRUCTURAL STATE OF CALIFORNIA Signed: 11/22/2023	REGISTERED PROFESSIONAL ENGINEER ZACHARY D. HARRIS No. M28906 Exp. 6/30/24 MECHANICAL STATE OF CALIFORNIA Signed: 11/22/2023
LEAD ELECTRICAL	
REGISTERED PROFESSIONAL ENGINEER JEFFREY R. MUIR No. E18977 Exp. 12/31/23 ELECTRICAL STATE OF CALIFORNIA Signed: 11/22/2023	

THIS PAGE INTENTIONALLY BLANK

TECHNICAL SPECIFICATIONS

TABLE OF CONTENTS

DIVISION 1 - GENERAL REQUIREMENTS

01190 Structural Design Requirements
01650 Facility Commissioning, Testing, and Startup
01700 Contract Closeout

DIVISION 2 - SITE WORK

02050 Demolition
02300 Earthwork
02516 Disinfection
02700 Paving and Surfacing

DIVISION 10 - SPECIALTIES

10200 Louvers
10400 Identifying Devices

DIVISION 15 - MECHANICAL

15050 Piping, Valves, and Accessories
15800 Heating, Ventilating, and Air Conditioning Air Distribution

DIVISION 16 - ELECTRICAL

16010 General Electrical Requirements
16110 Electrical Raceway Systems
16120 Low Voltage Wire and Cable
16124 Signal Cable
16205 Standby Diesel Engine-Generator Sets
16250 Automatic and Manual Transfer Switches
16402 Underground Electrical Work
16450 Electrical Grounding
16950 Electrical Tests
16961 Power System Studies

END OF TABLE OF CONTENTS

THIS PAGE INTENTIONALLY BLANK

SECTION 01190

STRUCTURAL DESIGN REQUIREMENTS

PART 1 - GENERAL

1.01 SUMMARY

A. This Section is applicable for nonstructural components, nonbuilding structures, and structural elements of the project that are intended to be designed by others as a deferred submittal including, but not limited to:
   1. Mechanical, Electrical, and Plumbing equipment and appurtenances including but not limited to:
      a. Electrical Equipment: Generator and Fuel Tank, including the design of the anchorage.
      b. Unless otherwise shown: All conduit, piping, cable trays, raceways, HVAC ducts and similar systems, if applicable. Including the anchorage to the structural support.

1.02 REFERENCES

A.	2022 CBC	California Building Code (CBC), CCR Title 24, Part 2, Volume 2, based on the 2021 International Building Code, California Building Standards Commission, 2022.
B.	ACI 318-19	Building Code Requirements for Reinforced Concrete and Commentary, American Concrete Institute, 2019.
C.	ACI 355.2	Qualification of Post-Installed Mechanical Anchors in Concrete and Commentary, American Concrete Institute, 2019.
D.	ACI 355.4	Qualification of Post-Installed Adhesive Anchors in Concrete and Commentary, American Concrete Institute.
E.	AC01	Acceptance Criteria (AC) for Expansion Anchors in Masonry Elements, International Code Council Evaluation Service.
F.	AC58	Acceptance Criteria for Adhesive Anchors in Cracked and Uncracked Masonry Elements, International Code Council Evaluation Service, 2019
G.	AC156	Acceptance Criteria for Seismic Certification by Shake-Table Testing of Nonstructural Components, International Code Council Evaluation Service.
H.	ASHRAE	American Society of Heating, Refrigeration, and Air-Conditioning Engineers, Inc., Practical Guide to Seismic Restraint, 2nd Edition, 2012.
I.	ASCE 7-16	Minimum Design Loads and Associated Criteria for Buildings and Other Structures, American Society of Civil Engineers (ASCE/SEI 7-16)
J.	SMACNA	Sheet Metal and Air Conditioning Contractors National Association, Latest Edition.

1.03 DEFINITIONS

A. Deferred Submittal: Portions of the design that have yet to be completed at the time of submittal of the Contract Documents. Deferred submittal items shall not be constructed or installed until the deferred submittal documents have been reviewed for general conformance by the Engineer of Record.

B. Specialty Engineer: Professional Civil Engineer or Structural Engineer licensed in the State where the project is being constructed, is responsible for nonstructural components, nonbuilding structures, and/or equipment supported by structures as identified in the Contract Documents as a deferred submittal. The Specialty Engineer shall be provided by the Contractor.

1.04 SUBMITTALS

A. Complete calculations, details, and complete reference drawings that are required to be submitted as part of a deferred submittal and as defined in the CBC and the Structural Drawings, shall be prepared, stamped, signed, and furnished by a Professional Civil or Structural Engineer licensed to practice in the State of California.

B. Minimum Calculation and Reference Drawing Requirements:
   1. Calculations shall be comprehensible and complete. When evaluating the structural strengths, indicate stress for comparing with strengths or show the demand versus capacity ratio in the structural elements. Evaluating the results by stating “Okay by Inspection” is not acceptable.
   2. Derivation of forces used, including at least one complete sample calculation, showing the process used so that Engineer of Record may determine general conformance. Printouts of spreadsheets without explanation of calculations used to determine values are not acceptable.
   3. The calculations and details shall demonstrate a complete vertical and lateral load path and shall clearly indicate all forces imposed on the supporting structure. Include all load combinations used in the design shall be referenced and include a clear indication whether service level or strength level was used in the design.
   4. Reference drawings shall include plans, sections, details, and equipment information as necessary for calculations. Indicate the location of the equipment on plan which is necessary for the development of load calculations.
   5. The Engineer of Record's review of the deferred submittal items identified in Contract Documents cannot be completed until all related items have been coordinated and submitted for review. Submittals will be returned without review if:
      a. Submittals include only calculations without reference drawings.
      b. Calculations have no sheet numbers or sheets are missing.
      c. Calculations or reference drawings are illegible.
      d. Calculations are made based on wrong information, assumptions, or design parameters.
      e. Information in reference drawings is insufficient for calculations or review.

C. Anchorage Calculations and Details:

1. Anchorage calculations and details shall be provided for all nonstructural components and nonbuilding structures required as part of the deferred submittal items. Anchorage calculations and details shall be sealed and signed by a Professional Civil or Structural Engineer licensed to practice in the State of California.
2. Submit anchorage calculations for nonstructural components and nonbuilding structures to resist dynamic operational, wind, and seismic forces in both concrete as required for the point of attachment relative to the Contract Documents.
3. Reduction factors associated with edge distance, embedment length, grout and base plate thickness, and bolt spacing shall be considered in the design and clearly indicated on the submittal drawings.
4. Anchorage details shall include the required concrete strength consistent with the Contract Documents, anchor bolt diameter, embed, spacing, and edge distances consistent with the calculations.
5. Include anchoring methods and leveling criteria for equipment consistent with manufacturer's recommendations.
6. Final dimensions of equipment pads based on equipment size and edge distance required for anchorage. The Contractor shall coordinate the final dimensions of equipment pads, including any revisions required to meet the requirements of the favorably reviewed submittal by the Specialty Engineer at no additional cost to the Owner.

D. Shop Drawings:
1. Contractor is responsible for coordinating the final foundation sizes with the final size of equipment and final anchorage calculations, including the coordination required for shop drawings relating to foundations or structures supported by nonbuilding structures and nonstructural components.
2. Shop drawings that require anchor reinforcement or supplementary reinforcement by the Specialty Engineer shall be included in the shop drawing submittals.
3. Shop drawings shall be submitted in accordance with the Contract Documents for items specified within their respective Specification Section.

E. Seismic Certification of Equipment: Submit seismic certifications for equipment identified in the Contract Documents, that state the equipment itself is designed to resist all internal seismic forces based on the seismic design criteria for the project. Submit Level 1 or Level 2 certification as noted in the equipment specifications or Contract Documents. If no level is indicated, provide Level 1 certification.
1. Level 1 Certification shall consist of a written certification from the manufacturer that the equipment is capable of resisting the internal seismic loads due to the loading conditions noted herein and meeting the requirements of ASCE 7, Chapter 13.
2. Level 2 Certification shall consist of a written certification from the manufacturer, and accompanying test results or experiential evidence, indicating compliance with ASCE 7, Chapter 13.
3. For elements designed in accordance with ASCE 7, Chapter 15, Contractor shall submit complete calculations in accordance with this Section for the nonbuilding structure in lieu of seismic certification unless specifically identified in the Contract Documents.

F. Quality Assurance Submittals
   1. Evaluation Reports: Submit the current and relative ICC-ESR or IAPMO-UES reports used in the design of anchorage and other structural elements.
   2. Seismic Certification: Submit seismic certification for equipment as identified in the Contract Documents.
   3. Verification of Installation: Submit a letter from the Contractor's Specialty Engineer verifying that the installation was performed as required by the Specialty Engineer's calculations. The Contractor shall be qualified to install post-installed anchors.
   4. Test Reports: Submit test reports for testing of anchors in accordance with the Contract Documents.

1.05 QUALITY ASSURANCE

A. Qualifications: The Contractor is responsible for submitting sealed and signed structural calculations and detailed drawings from a Specialty Engineer, licensed as Professional Civil or Structural Engineer in the State where the project is being constructed

B. Regulatory Requirements: Comply with the CBC, ASCE 7, applicable reference documents, and Contract Documents.

C. Special Inspection: Special Inspections and testing shall be performed as referenced in the Contract Documents.

1.06 GENERAL DESIGN REQUIREMENTS

A. Design Basis and Coordination: Contractor shall note that the layout of the structures and equipment pads shown on the Drawings have been developed based on the limits in the Contract Documents.
   1. Contractor shall coordinate all attachments and related work and shall provide connections as noted in the favorably reviewed shop drawings.
   2. For all suppliers, if the dimensions required by the Contractor's submitted anchorage calculations deviate from those provided in the Contract Documents, Contractor shall note the deviation in the submittal for review and provide the favorably reviewed pad at no additional cost to the Owner.
   3. Contractor shall coordinate all related work and deviations from the Contract Documents.

B. The Contractor is responsible for producing designs that resist dynamic operational, wind, seismic forces in accordance with the Contract Documents. The Contractor is responsible for coordinating between the Engineer of Record and the Specialty Engineer.

C. Coordinate the layout so that adequate space is provided between items for relative motion. Provide additional supports and restraints between items of different systems when necessary to prevent lateral impacts or interaction.

D. Structural Design Criteria: For the design of deferred submittal items, nonstructural components and nonbuilding structures, the Specialty Engineer shall follow the structural design parameters listed on the Structural Drawings Sheet S1: floor live loads, roof live loads, snow and rain load data, wind design data, seismic design data, earth forces, geotechnical information, and flood design data (if applicable).

E. The total operating weight of the equipment for nonstructural components and nonbuilding structure shall be considered in the development of the seismic design forces.

F. Nonstructural components, nonbuilding structures, and structural elements shall be designed for a concurrent vertical acceleration force. Where required by ASCE 7, the effects of vertical ground motions for nonbuilding structures shall be used in lieu of the vertical acceleration force.

G. Orthogonal Effects: Nonstructural components and nonbuilding structures shall be designed for orthogonal effects as required in the CBC and ASCE 7.

H. Nonstructural Components:
   1. The seismic design for nonstructural components and anchorage shall be in accordance with Chapter 13 of ASCE 7, and the required coefficients and factors for determining the total design seismic forces shall be shown on the deferred submittal drawings.
      a. Component Importance Factor, I_P: per Structural Drawings.
      b. Component Amplification Factor, a_p: per ASCE 7, Chapter 13
      c. Component Response Modification Factor, R_p: per ASCE 7, Chapter 13
      d. Overstrength Factor, Ω_O: per ASCE 7, Chapter 13
   2. Nonstructural components contained inside modular systems shall be designed in accordance with ASCE 7, Chapter 13.

I. Nonbuilding Structures:
   1. The seismic design for nonbuilding structures and anchorage shall be in accordance with Chapter 15 of ASCE 7. The required coefficients and factors for determining the total seismic forces shall be shown on the deferred submittal drawings.
      a. Seismic Importance Factor, I_E: per Structural Drawings.
      b. Response Modification Factor, R: per ASCE 7, Chapter 15
      c. Overstrength Factor, Ω_O: per ASCE 7, Chapter 15
      d. Deflection Amplification Factor, C_d: per ASCE 7, Chapter 15
   2. Premanufactured mechanical and electrical modules 6 feet high and taller that are not otherwise prequalified with ASCE 7, Chapter 13 and contain or support mechanical equipment and electrical components shall be designed in accordance with the provisions of ASCE 7, Chapter 15.

J. Nonstructural components and nonbuilding structures, that are located outside, shall be designed for the condition in which the component or structure is empty, subjecting the component or structure to wind forces while not in operation. This includes the anchorage of nonstructural and nonbuilding structures.

1.07 ANCHORAGE

A. Anchorage of nonstructural components and nonbuilding structures shall be designed to resist static, dynamic operational, seismic, and wind forces.

B. Anchorage calculations in both concrete shall clearly show that the capacity of the anchor and the capacity of the concrete that the anchor is attached to are adequate to resist all applicable load combinations in the CBC and ASCE 7.
   1. The design of anchors resisting seismic forces shall satisfy the ductility requirements stated in the CBC, ASCE 7, and ACI 318.

2. Post-installed anchors installed in concrete shall be prequalified for seismic applications in accordance with ACI 355.2 and ACI 355.4.

C. Anchorage shall be designed for dynamic operational forces and operating torque, if applicable, for vertical turbine pumps / vibratory equipment.

D. Anchorage shall be designed for bending in the anchor due to eccentricity where raised grout pads will be installed for leveling.

E. Anchor reinforcement or supplementary reinforcement deemed necessary to satisfy the anchorage design by the Specialty Engineer, shall be included at no additional cost to the Owner. Contractor is responsible for coordinating any anchor reinforcement or supplementary reinforcement with the shop drawings prior to fabrication. Anchor reinforcement or supplementary reinforcement shall be detailed in accordance with ACI 318-19.

1.08 ELECTRICAL EQUIPMENT FOUNDATIONS AND PADS

A. Electrical equipment foundations and housekeeping pads shall be coordinated with the Contract Documents and the anchorage requirements determined from the Specialty Engineer. The final dimensions of electrical equipment foundations and housekeeping pads shall not violate the applicable code provisions for the specified equipment, including but not limited to the provisions of the National Electric Code.

B. Electrical equipment housekeeping pads shall be 3.5 inches tall at the front of the equipment, unless otherwise specified within the Contract Documents. Contractor shall coordinate the final elevations with electrical.

C. Contractor shall verify the size and operating weight of the equipment with the Contract Documents and equipment manufacturer. Notify the Engineer of Record of any discrepancies between the equipment submittal and the Contract Documents prior to construction of the foundations.

1.09 MECHANICAL EQUIPMENT FOUNDATIONS

A. Mechanical equipment foundations and pads shall be coordinated with process equipment and piping elevations.

B. Contractor shall verify the size and operating weight of the equipment with the Contract Documents and equipment manufacturer. Notify the Engineer of Record of any discrepancies between the equipment submittal and the Contract Documents prior to construction of the foundations.

1.10 DESIGN REQUIREMENTS FOR PIPING, CONDUITS, AND DUCTWORK

A. The Contractor is responsible for producing designs for support of piping, conduit, duct or other systems to resist total seismic forces based on the seismic design criteria coefficients specified above, unless shown on the Contract Documents. Except where the technical specifications give specific exemption from resistance of seismic forces, all supports shall be designed to meet seismic criteria. Support systems for piping, conduit, duct or other systems greater than 5 inches in diameter are shown on the Contract Documents.

B. Where possible, pipes, conduit, and their connections shall be constructed of ductile materials (e.g., copper, stainless, steel, brass, ductile iron, steel, or

aluminum and brazed, welded, or screwed connections). Pipes, conduits, and their connections, constructed of non-ductile materials (e.g., cast iron, no-hub pipe and plastic), shall have the brace spacing reduced to one-half of the spacing allowed for ductile material.

C. Seismic restraints may be omitted for the following conditions, where flexible connections are provided between components and the associated ductwork, piping and conduit:
   1. All non-fuel piping less than 2.5 inches inside diameter or all piping suspended by individual hangers 12 inches or less in length from the top of the pipe to the bottom of the structural support for the hanger or electrical conduit less than 2.5 inches trade size.

D. All trapeze assemblies supporting pipes, ducts and conduit shall be braced to resist the total seismic forces considering the weight of the elements on the trapeze. Pipes, ducts, and conduit supported by a trapeze where none of those elements would individually be braced need not be braced if connections to the pipe/conduit/ductwork or directional changes do not restrict the movement of the trapeze. If this flexibility is not provided, bracing will be required when the aggregate weight of the pipes and conduit exceed 10 pounds/foot. The weight shall be determined assuming all pipes and conduit are filled with water.

E. As an alternative to designing the supports and anchorage, where an approved national standard provides a basis for the earthquake-resistant design, submit standard, data, and details for piping, conduit, duct, or other systems consistent with the code requirements referenced in the Contract Documents.

PART 2 - PRODUCTS (NOT USED)

PART 3 - EXECUTION

3.01 FIELD QUALITY CONTROL

A. Special Inspections and tests of elements, nonstructural, and nonbuilding structures shall meet the requirements of the Contract Documents and applicable Codes. The owner shall retain a qualified Special Inspector (other than the Contractor), who shall provide all special inspections and testing necessary to meet the Contract Documents and Code requirements during Construction. Special inspections are in addition to inspections performed by the Authority Having Jurisdiction.

B. Post-Installed Anchors: For post-installed anchors in concrete, proof load tests shall be in accordance with the relative and current ICC-ESR / IAPMO-UES report, unless indicated otherwise in the Contract Documents.

C. All testing of anchors shall be performed in the presence of the Special Inspector. Reports of the testing of anchors shall be submitted directly to the Engineer of Record.

D. Base Bid Estimate: Unless otherwise noted within the Contract Documents, the following shall serve as the basis for the bid estimate for testing of post-installed anchors and high-strength bolts.

1. Post-Installed Anchors: Minimum of 10% proof load tension testing or ten percent of the post-installed installed anchors.

END OF SECTION

SECTION 01650

FACILITY COMMISSIONING, TESTING, AND STARTUP

PART 1 - GENERAL

1.01 EQUIPMENT AND FACILITY STARTUP

A. Commission all systems and equipment to verify performance, function, and correct operation by performing procedures to activate, startup, adjust, test, and demonstrate that the work is in operating order in accordance with the general requirements of this Section and the detailed requirements of the technical sections under the system or equipment specified. To ensure that the work is ready for full-time operation, the procedures shall include verification, balancing, calibration, witness testing, documentation, inspection by equipment manufacturers and operator training where specified.

B. The Contractor shall designate a Project Startup Coordinator. The Startup Coordinator shall oversee preparation of the Startup Plan, coordinate startup activities, ensure proper testing and sign-offs for various mechanical, electrical and instrumentation and controls checks, and oversee the Facility Startup and Testing requirements. The Startup Coordinator shall have experience in the coordination, startup, and testing of similar capacity water treatment or wastewater treatment facilities.

C. Notification: Notify the City and Engineer five (5) days prior to starting each system or piece of equipment.

D. Coordination: During the startup period, coordinate the operation of the facility with Engineer, subcontractors, City's operators, and manufacturer's representatives. Provide regular updates of construction schedule and startup activities to the City's PLC/SCADA Programmer (City's Programmer).

E. Furnish test equipment, measuring devices, and supplies required to conduct tests.

F. Maintain the equipment until acceptance. Provide all lubricants, chemicals, and electricity necessary until acceptance.

G. Furnish all expendable supplies, gas, diesel fuel, water, etc., required for startup, demonstration, and testing, and dispose of all waste or used supplies, water, etc.

H. Favorably reviewed Operations and Maintenance (O&M) Manuals are required fifteen (15) days before the startup of new equipment/facilities.

1.02 SUBMITTALS

A. Startup Plan, Forms, and Schedule: Prepare a facility startup plan and schedule. The plan shall include test methods and procedures and sample forms for recording commission, test, and startup data.

B. Submit qualifications of proposed Project Startup Coordinator.

C. Provide Affidavits as described in paragraph 1.04 B.

D. Submit documentation of tests, balancing reports, and the like.

1.03 INITIAL STARTUP AND OPERATION OF FACILITIES

A. The following listing is a general sequence of startup activity steps to be used in placing facility systems into operation:

1. Perform initial lubrication of equipment and have manufacturers check and adjust equipment. Provide all subsequent lubrication and maintenance, and such staff as required for test operation until the City assumes equipment maintenance responsibility after Step 15 below.
2. Perform satisfactory testing of electrical work required prior to energizing of the electrical system.
3. After completion of Step 2, perform satisfactory electrical testing required after energizing of the electrical system.
4. Complete calibration of instruments.
5. Satisfactorily complete system verification of instrumentation work.
6. After completion of Steps 1 and 3, perform a rotational test of equipment and correct backward rotating drives.
7. After completion of Steps 5 and 6, test operate the equipment by manually initiating the operation. Where manual operation bypasses alarm or safety monitoring, provide continuous supervision of such parameters. Perform this step using water in lieu of chemicals or other process liquids. Use dry air or nitrogen in lieu of hazardous gases. Following testing with water, chemical lines shall be drained and be fully dried, in accordance with the specifications, prior to introduction of chemical.
8. Concurrent with Step 7, perform instrumentation and control testing and adjustments as related to the equipment being tested.
9. Concurrent with Step 7 and where possible at this stage of startup, complete the performance testing specified for the equipment.
10. Concurrent with Step 7, perform adjustments of the electrical work as related to the equipment being tested.
11. Repeat Steps 1 through 10 as required for other equipment items and systems until all process components and utility systems are ready for total operation. It may be necessary for the Contractor to put portions of the newly constructed facility in service before constructing other portions of the facility or completing the Work as a whole.
12. Submit the required documentation of testing, calibration, and equipment affidavits.
13. Notify the City and the Engineer 21 days before total operation is to occur so that the City may order fuel and make other arrangements for full-time operation. This notification shall have an accuracy of plus or minus seven (7) days. Notify the City and Engineer again, exactly seven (7) days before total operation is to begin.
14. Startup and Initial Operation Test: Upon completion of all the above steps, the facility shall be started up and operated on a complete full-time basis beginning on the indicated date. The City will provide operating personnel, chemicals and untreated water. For *five (5)* consecutive days beginning with the start-up day, the Contractor shall have at the site, during the day shift, a mechanic, an electrician and an instrument engineer. Representatives of manufacturers of critical equipment shall also be present for these five (5) days as needed or as required elsewhere in the Specifications. The Contractor shall also provide these personnel, on a 24 hour per day, "on call" basis, if necessary, to adjust, repair, and correct deficiencies as required to

keep the Poinsettia Lift Station in continuous operation for a period of 30 calendar days. The Contractor shall train the operators in the proper operation and the control of the new facilities. The Contractor shall also furnish all such mechanical and electrical workers as required to make adjustments to and perform all required maintenance for the operating equipment until the end of the 30-day initial operation period. Maintenance of operating equipment shall include lubrication, adjustments, replacements, and modifications as required.

15. After successful completion of the 30-day initial operation period, the City will take over maintenance duties as well as operation and will begin to provide and pay for lubricants. If continuous process operation of the Poinsettia Lift Station is interrupted due to a failure of the equipment or work provided by the Contractor, then the counting of the 5-day and/or 30-day periods, described in Step 14 above, shall be restarted at day one if these periods have not reached satisfactory completion.
16. Following the commencement of Step 14, satisfactorily complete equipment performance testing, electrical testing and adjustments, and instrumentation/control testing and adjustments to the extent that such testing and adjustments could not be made prior to full operation.
17. Submit any remaining documentation of testing, balancing reports, equipment affidavits, and the like commissioning before acceptance.

1.04 MANUFACTURER'S FIELD SERVICE AND AFFIDAVITS

A. Field Service: Where specified, manufacturers of equipment shall provide field service. Field service shall be provided by an authorized factory-trained and qualified manufacturer's representative for the specific equipment. Equipment shall not be considered ready for full-time operation until after the manufacturer's representative has checked and adjusted the equipment, and certified by written affidavit that the equipment has been properly installed, tested, adjusted, lubricated, and calibrated, and is ready for full-time operation.

B. Affidavits: Acceptable affidavits shall be submitted prior to completion of the work.
   1. Affidavits shall contain the following specific wording:
      "The [Name of Equipment] has been properly installed, tested, adjusted, lubricated, and calibrated, and is ready for full-time operation. The installation has been inspected and has been found to be in conformance with our (the manufacturer's) standards and requirements."
   2. Except for insertion of the equipment name, no amplification, dilution, or modification of this specific wording will be permitted.

1.05 TRAINING

A. Submit Operation and Maintenance Manuals and Parts Lists specified in City General Provisions at least fifteen (15) days prior to the first training session.

B. Demonstrate the operation, maintenance and safety procedures for all systems and equipment to personnel designated by the City.

C. Provide 4 hours of onsite demonstration of systems and equipment in accordance with the General Conditions.

D. In addition to overall training specified above, provide special demonstration and training for specific pieces of equipment specified in the Technical Specification Sections.

PART 2 - PRODUCTS (NOT USED)

PART 3 - EXECUTION (NOT USED)

END OF SECTION

SECTION 01700

CONTRACT CLOSEOUT

PART 1 - GENERAL

1.01 FINAL CLEANUP

A. Just prior to Final Inspection, the Contractor shall clean the entire construction area including buildings, other structures, landscaping, and site work included in this Contract as well as all other areas affected by the performance of work under this Contract. Perform cleanup work using personnel specializing in and skilled in building cleaning and maintenance work. Perform cleaning to standards considered normal for commercial janitorial work. Accomplish repair work using personnel specializing in performing and repairing the type of work being repaired. Perform repair work to the highest trade standards applicable to that type of work. Include:

1. Remove all temporary construction, signs, tools, equipment, excess materials and debris.
2. Repair, patch or replace new or existing work including pavement, sidewalks, curbs, gutters, catch basins, gratings, manholes, covers, landscaping, plant materials and other items that have been damaged, broken, cracked or chipped as a result of performing this Work.
3. Sweep clean and then wash down all exterior pavement surfaces. Avoid washing sediment or hazardous material into drainage systems. Remove all grease and oil stains on pavement caused by Contractor's equipment.
4. Rake all landscaped area; remove debris and cut lawns. Water and fertilized landscape materials. Replace damaged plant and landscape materials.
5. Clean all glass without scratching. Scratched glass shall be replaced.
6. Remove all lumps, splatters, spots and stains caused by paint, adhesive, asphalt, concrete, mortar, plaster, sealant or other foreign material from all exposed or finished surfaces. Remove all temporary labels.
7. Patch any holes, chips or defects in construction including finished surfaces.
8. Touchup painted surfaces that are soiled, chipped, spotted or otherwise flawed.
9. Wash all floors with cleaner recommended by flooring manufacturer. Apply sealer and initial application of floor care product recommended by flooring manufacturer. Buff with power floor machine.
10. Remove all dust with treated dust cloth and vacuum.
11. Polish all hardware and non-ferrous metal.
12. Clean all lighting fixtures.

1.02 CONTRACTOR'S ACTION LIST OF ITEMS TO BE CORRECTED AND/OR COMPLETED

A. During construction, the Contractor shall maintain an action list of items to be corrected and/or completed. Regularly add items and update the list as information becomes available or as requested by the Engineer. Deliver a current copy of the list to the Engineer at each progress meeting.

1.03 SEMIFINAL INSPECTION/SUBSTANTIAL COMPLETION

A. When the Contractor considers the Work nearly complete, the Contractor shall review the Contract Documents, inspect the Work, and use the Contractor's action list to prepare a Contractor's Punch List of all deficient or uncompleted items. Complete or correct the items on the Punch List. When the Work is Substantially Complete in accordance with General Conditions, notify the Engineer in writing that the Contractor has reviewed the Contract Documents, inspected the Work and believes that the Work is Substantially Complete and ready for Semifinal Inspection.

B. On receipt of the Contractor's Punch List and notice that the work is ready for Semifinal Inspection, the Engineer will inspect the Work. The Engineer may add additional items to the Contractor's Punch List, may find that the Work is not ready for inspection, may find that the Work is ready for inspection but not Substantially Complete or may find that the Work is Substantially Complete. When the Engineer finds the Work is Substantially Complete, he/she will prepare a Final Punch List and a notice of Substantial Complete, which will state the date of Substantial Completion and the time agreed to by the City and the Contractor (not to exceed 30 calendar days) in which the Work shall be fully complete and ready for Final Inspection.

1.04 FINAL INSPECTION, FINAL COMPLETION AND FINAL PAYMENT

A. When the Contractor has completed or corrected all the items on the Engineer's Final Punch List, the Contractor shall give the Engineer written notice that the Work is ready for Final Inspection. When the Engineer finds the Work acceptable and fully complete in accordance with the Contract Documents, and upon receipt of a final Application for Payment and all final submittals, the Engineer will recommend that the City issue a Notice of Final Completion, make Final Payment and Accept the Work stating that to the best of the Engineer's knowledge, information and belief, and on the basis of the Engineer's observations and inspection, the Work has been fully completed in accordance with the terms and conditions of the Contract Documents.

B. Final Submittals include:
   1. Operation and Maintenance Manuals and Parts Lists
   2. Record Drawings
   3. Extra Materials
   4. Special Guarantees
   5. Maintenance Contracts
   6. Insurance Certificate showing required continuation of coverage beyond Final Payment.
   7. Release of Liens.
   8. Waiver of Claims by Contractor.
   9. And any other submittals required by the Contract Documents and not previously received.

C. The City will record the Notice of Final Completion at the County Recorders Office.

1.05 RECORD DRAWINGS

A. The Contractor shall maintain on the jobsite, a complete set of Contract Documents and a complete file of all addenda, contract modifications and favorably reviewed submittals. The Contractor shall prepare a set of Record Drawings

concurrently with the construction of the Work and in accordance with General Conditions and the following:

1. Show the invert elevation of all gravity piping and the top of pipe, top of conduit or top of protective concrete encasement for other utilities. Elevations shall be related to a permanent visible elevation benchmark set at the site by the Contractor.
2. Show the horizontal location of underground utilities measured from permanent visible physical features such as face of building, face of tank, or centerline of manhole.
3. Comply with detailed requirements in technical specification sections describing the type of information required on Record Drawings. The Contractor's copy of Contract Documents, Contract modifications and Record Drawings shall be available to the Engineer for weekly verification that the records are being currently updated.

B. Submit Record Drawings and obtain acceptance prior to completion.

1.06 EXTRA MATERIALS

A. Deliver specified extra materials and parts to City. Itemize all items on a transmittal letter in duplicate and obtain signature of receiving party. Submit copies of signed transmittals for all specified extra materials and parts prior to completion.

PART 2 - PRODUCTS (NOT USED)

PART 3 - EXECUTION (NOT USED)

END OF SECTION

THIS PAGE INTENTIONALLY BLANK

SECTION 02050

DEMOLITION

PART 1 - GENERAL

1.01 DESCRIPTION

A. Provide all demolition required to perform the work covered under this contract including without limitation:
   1. Remove existing construction shown to be removed.
   2. Remove and replace existing construction and/or finishes as required to provide access to perform other work included in this contract.
   3. Include removal of mechanical and electrical work that is to be abandoned and is contained in construction to be removed whether or not the mechanical and electrical work is shown. Disconnect and cap off utilities in accordance with applicable codes and safety regulations.
   4. Where utilities that are not shown pass through construction that must be removed and those utilities serve other areas notify the Engineer before disrupting service. If rerouting is required to maintain service, the City may issue a Change Order to accomplish the required work.
   5. Store and protect items intended for reuse.
   6. Assume ownership of debris and unwanted materials, remove from the site and dispose of legally.
      a. Special requirements for waste management during deconstruction and renovation and construction operations.
         1) Protect the environment, both onsite and offsite, during deconstruction and renovation and construction operations.
         2) Prevent environmental pollution and damage.
         3) Maximize source reduction, reuse, and recycling of solid waste.
   7. Include the cost of removing and disposing of hazardous material including without limitation PCBs.
   8. Comply with all State permit requirements for demolition. The Contractor shall perform a pre-demolition survey to determine whether hazardous material is present. If material is identified as hazardous, retain qualified and State-licensed Contractor to remove and dispose of the materials legally.
   9. If illegal electrical wiring is encountered such as "BX" or nonmetallic sheathed cable, notify the Engineer.
   10. Remove and properly dispose of unwanted fixed equipment, including without limitation unwanted equipment, machinery, and devices built into or attached to the building. Remove all loose items including rubbish, debris, etc.

1.02 NOISE AND DUST CONTROL

A. Perform work in accordance with requirements in Division 1 Sections 01650 and 01700. Particular attention is directed without limitation to paragraphs titled: City's Continued Operations, Cleanup During Construction, Fire Protection During Construction, Maintenance of Exit Routes for Building Users, Temporary Dust Barriers, Noise Control and Care of Existing Facilities.

B. Provide temporary partitions to control dust and noise and exclude unauthorized persons.

C. Perform work in a manner to cause the least disturbance to building occupants and the least damage to work to remain.

D. Maintain adequate means of safe, clear egress for building occupants.

E. Employ all available techniques for construction noise abatement. Use remote, well-mufflered air compressors and newest noise suppressed pneumatic and electric tools.

1.03 WARNING

A. The Contractor is advised that work under this Section may be hazardous. The Contractor is to take all necessary precautions to ensure the safety of workers and property. Removal of and/or working in areas containing even minor amounts of hazardous material including without limitation, PCBs or other hazardous materials requires special precautions, knowledge, and procedures. If hazardous material is suspected, notify the City.

1.04 QUALITY ASSURANCE

A. Maximize use of source reduction and recycling procedures.

1.05 PRECONSTRUCTION MEETING

A. After award of Contract and prior to the commencement of the Work, schedule and conduct meeting with City and Engineer to discuss the proposed Waste Management Plan and to develop mutual understanding relative to details of environmental protection.

1.06 SUBMITTALS

A. Information to be submitted in accordance with City General Provisions.

B. Submit copies of all executed permits.

C. Solid Waste Management Plan: Not less than 10 days before the Pre-construction meeting, prepare and submit a Solid Waste Management Plan including, but not limited to, the following:
   1. List of the recycling facilities, reuse facilities, municipal solid waste landfills and other disposal area(s) to be used. Include:
      a. Name, location, and phone number.
      b. Copy of permit or license for each facility.
   2. Identify materials that cannot be recycled or reused. Provide explanation or justification.
   3. Revise and resubmit Plan as required by City.
      a. Approval of Contractor's Plan will not relieve the Contractor of responsibility for compliance with applicable environmental regulations.

D. Progress Documentation: Document solid waste disposal and diversion. Include the quantity by weight of waste generated; waste diverted through sale, reuse, or recycling; and waste disposed by landfill or incineration. Identify landfills, recycling centers, waste processors, and other organizations that process or receive the solid waste.

1. Document on form in Appendix A of this Section, or similar form as approved by City.
2. With each Application for Payment, submit updated documentation for solid waste disposal and diversion.
3. With each Application for Payment, submit manifests, weight tickets, receipts, and invoices specifically identifying the Project and waste material.

E. Record Submittals: With Record Submittals as specified in Section City General Provisions, submit the following:
1. Summary of solid waste disposal and diversion. Submit on form as approved by City.

1.07 PERMITS

A. Contractor shall fill out, submit and pay for the following permits:
1. California Department of Public Health:
a. Demolition Notification Application Form (minimum 10 day lead time)

PART 2 - PRODUCTS - NOT USED

PART 3 - EXECUTION

3.01 SOLID WASTE MANAGEMENT

A. Develop and implement a waste management program in accordance with ASTM E1609 and as specified herein.

B. Collection: Implement a recycling/reuse program that includes separate collection of waste materials of the following types as appropriate to the project waste and to the available recycling and reuse programs in the project area:
1. Land clearing debris.
2. Asphalt.
3. Concrete and Masonry.
4. Metal.
a. Ferrous.
b. Non-ferrous.
5. Wood, nails, and staples allowed.
6. Debris.
7. Plastic
a. Type 1: Polyethylene Terephthalate (PET, PETE).
b. Type 2: High Density Polyethylene (HDPE).
c. Type 3: Vinyl (Polyvinyl Chloride or PVC).
d. Type 4: Low Density Polyethylene (LDPE).
e. Type 5: Polypropylene (PP).
f. Type 6: Polystyrene (PS).
g. Type 7: Other. Use of this code indicates the package in question is made with a resin other than the six listed above, or is made of more than one resin listed above, and used in a multi-layer combination.
8. Flooring.
a. Concrete.
9. Others as appropriate

C. Recycling/Reuse: Maximize recycling and reuse of materials.
   1. Recycling/Reuse off project site: The following is a partial list for Contractor's information only. For more information, contact the State Department of Environmental Quality and the local Integrated Solid Waste Management Office.
      a. Habitat for Humanity, a non-profit housing organization that rehabilitates and builds housing for low-income families. Sites requiring donated materials vary. Contact the national hotline (800) HABITAT.
      b. California Materials Exchange (CAL-MAX) Program sponsored by the California Integrated Waste Management Board; (916) 255-2369.

D. Handling:
   1. Clean materials that are contaminated prior to placing in collection containers. Deliver materials in accordance with recycling or reuse facility requirements (e.g., free of dirt, adhesives, solvents, petroleum contamination, and other substances deleterious to recycling process).
   2. Arrange for collection by or delivery to the appropriate recycling or reuse facility.
   3. Hazardous Waste and Hazardous Materials: Handle in accordance with applicable regulations.

E. Composting: In accordance with State Extension Service recommendations and as follows:
   1. Moisture content: Maintain between 35 percent and 60 percent.
   2. Carbon to nitrogen (C/N) ratio: Maintain at approximately 30 to 1 by weight.
   3. Do not compost meat or dairy products on site.
   4. Where the proposed Waste Management Plan incorporates composting of plastics, assess the potential effect of each type of plastic to be included on the composting process in accordance with ASTM D6002.

3.02 REMOVAL OF CONSTRUCTION IN AREAS TO RECEIVE NEW WORK

A. In areas intended to receive new work and/or finishes, remove all unwanted non-structural partitions, furred walls, chases, suspended or furred ceilings, doors, and finishes.

B. Remove all unwanted mechanical and electrical work (whether shown or not) that is not wanted and is not needed to serve other areas that is in, on, or concealed behind work being removed. Cap off or terminate all mechanical or electrical work in accordance with the requirements of Divisions 15 and 16.

C. Protect mechanical and electrical work that serves other areas. Relocate concealed mechanical and electrical work that is required to preserve service to other areas.

D. Remove structural work designated for removal. Take precautions not to damage structural work intended to remain. Where temporary shoring is needed, submit a design prepared by an appropriately licensed engineer for review before proceeding.

E. If structural elements are encountered that were not shown, protect them from damage and report their presence to the Engineer.

3.03 REMOVAL OF LIMITED PORTIONS OF EXISTING CONSTRUCTION TO PERMIT MODIFICATIONS

A. Provide careful, selective cutting and removal of existing construction as required to permit relocation or modification of partitions, doors, or openings. Cut and remove the least amount of work possible except when a larger area needs to be removed to permit strengthening existing construction or when required to remove finishes to a natural break line such as a corner or change in material.

B. Protect existing construction to remain with temporary coverings.

C. Treat existing mechanical, electrical, or structural work as described in other parts of this Section.

D. When modifications are complete, replace removed work with new construction and finishes to match adjacent existing work. Standards of material and workmanship shall be in accordance with other portions of this Specification or if not covered then in accordance with current practice for this class of work. Salvaged materials may be used for replacement if in good condition.

3.04 REMOVAL OF EXISTING CONSTRUCTION TO PROVIDE ACCESS TO PERFORM WORK

A. Provide careful selective cutting and removal of existing construction where required to permit installation of new concealed mechanical or electrical work, or installation of equipment, fixtures or devices.

B. Treat existing mechanical, electrical, or structural work as described in other parts of this Section.

C. Replace and/or patch removed construction and finishes in accordance with other parts of this Section.

3.05 PROTECTION OF WORK TO REMAIN

A. Protect existing Generator/Chemical Storage Building.

B. Protect all work to remain. Repair damage with materials, workmanship, and finishes matching existing work when new.

C. Most existing floor finishes will not be replaced in this contract. It is essential these floors be protected from any damage due to impact, dirt, abrasion, paints, and solvents.

3.06 CUTTING HOLES IN CONCRETE AND/OR CONCRETE MASONRY UNIT (CMU)

A. The Contractor is cautioned that electrical conduits and reinforcing that are not shown on Drawings may be concealed in concrete CMU construction. Use electronic detection equipment to locate concealed items before cutting holes. Take all required precautions to avoid damage to existing conduits or reinforcing.

B. New openings in existing concrete walls or slabs may be saw cut to opening perimeter lines where Drawings do not call for adding reinforcing trim bars to strengthen openings. Do not run saw kerfs past corners of openings. Complete concrete removal at opening corners by chipping and grinding. Take all required precautions to avoid water damage to existing construction or the City's property.

C. Where Drawings call for adding reinforcing trim bars to strengthen openings, limit saw cutting to a depth of 3/4 inch to avoid cutting existing reinforcing steel. Carefully chip out concrete to avoid damaging existing reinforcing steel which is to remain.

D. Use chipping guns to chip out small holes for pipes or conduits. Proceed carefully to avoid damage to concealed conduits. Core drilling is permitted only at the Contractor's risk and only with the City's permission. If core drilling is used, the Contractor shall: 1) use electronic detection equipment to locate conduit before drilling, 2) take precaution to avoid water damage to existing construction or the City's property, and 3) replace, at its own expense, any damaged electrical or signal wiring or conduits.

3.07 REMOVE UNWANTED FIXED EQUIPMENT

A. Remove unwanted items whether shown or not. Cut off protruding bolts or attachment devices flush with existing surfaces.

B. If items are designated on the Drawings to be salvaged, remove them carefully without causing damage.

C. Store and protect items to be reused until time of need on jobsite.

3.08 IF HAZARDOUS MATERIALS ARE ENCOUNTERED

A. If hazardous materials are discovered, comply with paragraph 1.01 of this Section and all applicable laws.

3.09 REMOVAL AND DISPOSAL OF MATERIAL

A. Use debris chutes with covered tops emptying into covered containers.

B. Store debris in suitable covered containers located where directed by the Engineer or City and remove from site when full. Burning on the site is not permitted.

C. Removed material (other than material to be reused) shall become the property of the Contractor who shall remove it from the site and dispose of it in a legal manner.

3.10 UTILITY LOCATES AND DEMOLITION

A. There are electrical conduits that may nor may not be shown on the Drawings. Locate, demolish, and restore as required for the construction.

END OF SECTION

SECTION 02300

EARTHWORK

PART 1 - GENERAL

1.01 SUMMARY

A. Section Includes:

1. Perform all excavation, trenching, shoring, dewatering, backfilling, compaction, grading and disposal of excess material necessary or required for the construction of the work as covered by these Specifications and indicated on the Drawings. The excavation shall include, without classification, the removal and disposal of all materials of whatever nature encountered, including water and all other obstructions that would interfere with the proper construction and completion of the required work.

1.02 REFERENCES

A. American Association of State Highway and Transportation Officials (AASHTO)

1. AASHTO T99 — Standard Method of Test for Moisture-Density Relations of Soils
2. AASTO T193 — Standard Method of Test for The California Bearing Ratio

B. ASTM International (ASTM).

1. ASTM C131 - Standard Test Method for Resistance to Degradation of Small-Size Coarse Aggregate by Abrasion and Impact in the Los Angeles Machine
2. ASTM D448 - Standard Classification for Sizes of Aggregate for Road and Bridge Construction
3. ASTM D698 - Standard Test Method for Laboratory Compaction Characteristics of Soil Using Standard Effort (12,400 ft-lb/ft3).
4. ASTM D1556 - Standard Test Method for Density of Soil in Place by the Sand-Cone Method.
5. ASTM D1557 - Standard Test Method for Laboratory Compaction Characteristics of Soil Using Modified Effort (56,000 ft-lb/ft3).
6. ASTM D1883 - Standard Test Method for California Bearing Ratio (CBR) of Laboratory-Compacted Soils
7. ASTM D2167 - Standard Test Method for Density and Unit Weight of Soil in Place by the Rubber Balloon Method.
8. ASTM D2419 - Standard Test Method for Sand Equivalent Value of Soils and Fine Aggregate
9. ASTM D2487 - Standard Classification of Soils for Engineering Purposes (Unified Soil Classification System).
10. ASTM D2844 - Standard Test Method for Resistance R-Value and Expansion Pressure of Compacted Soils
11. ASTM D2922 - Standard Test Method for Density of Soil and Soil-Aggregate in Place by Nuclear Methods (Shallow Depth).
12. ASTM D3017 - Standard Test Method for Water Content of Soil and Rock in Place by Nuclear Methods (Shallow Depth).

13. ASTM 3744 - Standard Test Method for Aggregate Durability Index
14. ASTM D4253 - Standard Test Methods for Maximum Index Density and Unit Weight of Soils Using a Vibratory Table.
15. ASTM D4254 - Standard Test Methods for Minimum Index Density and Unit Weight of Soils and Calculation of Relative Density.
16. ASTM D4318 - Standard Test Method for Liquid Limit, Plastic Limit, and Plasticity Index of Soils.
17. ASTM D6913 - Standard Test Methods for Particle-Size Distribution (Gradation) of Soils Using Sieve Analysis
18. ASTM D7928 - Standard Test Method of Particle-Size Distribution (Gradation) of Fine-Grained Soils Using the Sedimentation (Hydrometer) Analysis

Standards listed below apply when no other more stringent standard is referenced. The order of precedence is as follows:

1. Agency Standards: City of Carlsbad Utilities Department
2. Local Standards: City of Carlsbad
3. Regional Standards: Greenbook

C. Standard Specifications for Public Works Construction (SSPWC), aka "Greenbook".

D. City of Carlsbad Standard Specifications (City Standard Specifications)

E. City of Carlsbad Utilities Department Standard Specifications (Agency Standard Specifications)

1.03 DEFINITIONS

A. Site: Property owned by City of Carlsbad as shown on the Drawings.

B. Fill: Earth used to fill holes, pits, or depressions necessary to bring the final grade up to the specified elevation or contours.

C. Pipe Zone: Zone of material that extends from 6 inches below the bottom of pipe to 12 inches above the crown of the pipe.

D. Pipe Bedding: Zone of material that extends from the bottom of the pipe to 6 inches below the pipe.

E. Trench Zone: Zone of material that extends from the top of the pipe zone to the bottom of the pavement subgrade in pavement areas or to the top of the trench in earth areas.

F. Subgrade: Zone of material that is improved to create a stable, suitable platform for subsequent layers.
   1. Finished Subgrade: Finished subgrade indicates the top of the subgrade section in a cut scenario.
   2. Fill Subgrade: Fill subgrade indicates the top of the subgrade section in a fill scenario.

G. Over excavation: Excavation beyond the limits shown in the Drawings.

H. Relative Compaction: In-place dry density divided by the maximum dry density laboratory compaction expressed as percentage.

1.04 SUBMITTALS

A. Submit in accordance with City General Provisions.

B. Contractor shall not excavate, construct embankments, or fill until all the required submittals have been reviewed and approved.

C. Submittals for Informational Purposes:
   1. Dewatering Plan: Describe methods for dewatering including power source, size of pumps, appurtenances, settlement monitoring program, and dewatering water disposal. Include any SWPPP and NPDES Permit information relevant to discharge of water from dewatering. Prepare and submit a Dewatering Plan in accordance with SSPWC Section 3-8.2 and 3-12.6.5.

D. Product Data:
   1. Potholing Report.
   2. Gradation report(s) for bedding material and import backfill materials.
   3. Test results on bedding and import material indicating Sand Equivalent, R-value, Durability Index, Liquid Limit, Plastic Limit and Plasticity Index.
   4. Compaction Reports indicating results from QC testing.

E. Samples and Test Results:
   1. Furnish, without additional cost to the City, such quantities of Bedding material and Import materials, listed herein, as may be necessary for testing.
   2. Test bedding and import materials proposed for use demonstrating that the materials conform to the specified requirements. Perform tests no more than 60 Calendar Days prior to submission. Submit results to the Engineer at least ten (10) days prior to delivery.
   3. Submit certifications for each source of all imported/borrow materials indicating the location where the imported/borrow material will be obtained, including the street address, town, lot and block, county and state, and a brief history of the site which is the source of the material.
      a. City may request a copy of the material delivery ticket at delivery of each load each day.
   4. Notify the Engineer a minimum of 48 hours before obtaining samples. The Engineer may choose to be present while samples are obtained.

1.05 QUALITY ASSURANCE / QUALITY CONTROL

A. All material furnished and all work performed shall be subject to rigid inspection. No material shall be delivered to the site until it has been favorably reviewed by the Engineer and sample test results provided. All material furnished and all work performed shall be subject to inspection, and no material shall be delivered to the site until it has been favorably reviewed by the Engineer or used in the construction work until it has been inspected in the field/source/quarry by the Engineer should the Engineer/City choose to inspect.

B. Source Quality Control: Furnish all bedding material from a single source throughout the work unless otherwise approved.

C. Field Quality Control:
   1. The Contractor shall hire an independent soil testing laboratory approved by the Engineer to perform the following tasks for flatwork, pipeline installation, non-structural fill or items not requiring special inspection as outlined under Special Inspections:

a. Perform a Particle-Size Distribution (Gradation) Analysis every 5,000 cubic yards of materials delivered.
b. Test Pipe Zone, Pipe Bedding and Trench Zone material for quality and in-place density requirements specified herein. Contractor shall test every 200 feet of trench.
c. Where Special Inspections are not required, test fill materials to verify conformance with material quality every 5,000 cubic yard of materials delivered.

2. Perform re-work and re-testing for non-compliant Work and demonstrate to the City non-compliant work has been addressed. Contractor shall be responsible for costs of additional inspection, rework, and re-testing resulting from non-compliance.
3. Material that does not meet the gradation, quality or compaction requirements shall be removed and replaced with material that does comply at no additional cost to the City.

D. Field Quality Assurance
1. The Engineer will:
a. Review materials, not covered under Special Inspections.
b. Observe excavation, not covered under Special Inspections, and advise the Contractor should excavation beyond the limits shown in the Drawings be required.
c. Review results of the Contractor's independent testing laboratory tests and request additional testing at the Engineer's discretion.

2. At the City's discretion, Quality Assurance (QA) testing may be conducted by the Engineer, or a separate independent testing laboratory acceptable to the Engineer, to verify results obtained by the Contractor's QC third party independent testing laboratory. The Contractor shall provide adequate clearance of areas for testing as recommended by the Engineer. QA testing will be paid for by the City. Areas where QA testing indicates results that do not meet the project specification requirements, shall be recompacted by the Contractor at no additional costs to the City and shall be retested by the Contractor's QC testing laboratory to verify test results meet project specification requirements.

E. Special Inspections:
1. The City will be responsible for special inspections in accordance with the building code CBC Chapter 17 Section 1705.6 and the Drawings. Special inspection is required for work related to constructing buildings, structures, structural work, and roadways, and includes but is not limited to:
a. Verifying materials below foundations are adequate to achieve the design bearing capacity requirements.
b. Verifying excavations are to the depth identified in the Contract Documents and the bottom of excavations are suitable materials.
c. Perform classification and testing of compacted fill materials.
d. Verifying materials meet quality, lift thickness and in-place density requirements specified herein.
e. Prior to placement of compacted fill, inspect subgrade and verify the site has been prepared properly.

2. Testing will be performed at the frequency provided or as otherwise established by the City prior to Construction:
a. Engineered Fill: Test every 500 square feet for each 2 feet of fill.

b. Subgrade: Test every 200 square feet where in-place materials have been disturbed and recompacted or as recommended by the Engineer.
c. Structural Backfill:
    a) Test every 200 square feet of building footprint, with no less than two tests per structure.
    b) Test every 200 cubic yards of material placed within 10 feet around the building.
d. Aggregate Base: Test every 500 square feet of each layer.

F. Testing Methods:

1.	R-Value:	California Test 301 or ASTM D2844
2.	Durability Index:	California Test 229 OR ASTM 3744.
3.	Aggregate Gradation:	California Test 202 OR ASTM D6913 and D7928
4.	Sand Equivalent:	California Test 217 OR ASTM 2419
5.	Specific Gravity:	ASTM D854
6.	Laboratory Compaction:	ASTM D1557, Method A or C (Modified Proctor) or ASTM D698 (Standard Proctor)
7.	In-place Density:	ASTM D1556 or ASTM D6938[1]
8.	Plastic Limit and Plasticity Index:	ASTM D4318.
9.	Soil Classification:	ASTM D2487.

[1]If nuclear methods are used for in-place density testing, verify the accuracy with one sand cone test and one maximum laboratory dry density test for every five (5) nuclear tests.

1.06 DELIVERY, STORAGE AND HANDLING

A. Earthwork materials shall be stored in a location confirmed in writing by the City/Engineer or as indicated on the Drawings.

B. Stockpile material so that it's not contaminated, does not cause damage, does not become saturated and is identifiable.

C. Storage of Excavated Materials:
1. Neatly place excavated materials far enough from the excavation to prevent stability problems. Keep the materials shaped to cause the least possible interference with plant operations and drainage.
2. Excavated materials unsuitable for backfill shall be disposed of immediately.

1.07 SUBSURFACE INVESTIGATIONS

A. While the records of data obtained may be considered by the Contractor to be correct, any conclusions or recommendations made in the reports are for information to the Design Engineer and are not a part of the Contract Documents.

B. The bidders may make additional subsurface investigations at the site prior to the bidding of the project at their cost. Prior to making any drillings or excavations, the bidder shall secure permission from the City.

1.08 ADDITIONAL SAFETY RESPONSIBILITIES

A. The Contractor shall select, install, and maintain shoring, sheeting, bracing, and sloping as necessary to maintain safe excavations. The Contractor shall be

responsible for ensuring such measures: (1) comply fully with 29 CFR Part 1926 OSHA Subpart P Excavations and Trenches requirements, (2) provide necessary support to the sides of excavations, (3) provide safe access to the Engineer's sampling and testing within the excavation, (4) provide safe access for backfill, compaction, and compaction testing, and (5) otherwise maintain excavations in a safe manner that shall not endanger property, life, health, or the project schedule. All earthwork shall be performed in strict accordance with applicable law, including local ordinances, applicable OSHA, Cal OSHA, California Civil Code, and California Department of Industrial Safety, Federal Register, 29 CFR, Part 1926, Subpart P; Occupational Safety and Health Standards-Excavations, requirements.

1.09 EXPLOSIVES

A. Do not use explosives unless specifically authorized, in writing, by the Engineer.

PART 2 - PRODUCTS

2.01 MATERIAL DEFINITIONS

A. Engineered Fill: Engineered fill may be Imported Soil or Native Soil that has been processed to meet the below requirements.
   1. Native Soil: It shall not contain rocks or lumps larger than 3 inches in greatest dimension or more than 15 percent of the material larger than 1 ½ inches and be free of organics, debris, and other deleterious materials. Wet, soft, or frozen material, organic matter, asphalt chunks, or other deleterious substances shall not be used as backfill. Engineered Fill shall contain at least 20 percent passing the No. 200 sieve and have a low expansion potential as indicated by a Plasticity Index of 15 or less, or Expansion Index of less than 20. Native soil shall have organic material less than 3 percent by weight.
   2. Imported Soil: Imported non-expansive soil with liquid limit no greater than 40 percent and a plasticity index no greater than 15 percent, free from clods or rocks larger than 2 inches in greatest dimension. Representative soil samples of proposed import fills shall be approved by the Geotechnical Engineer prior to delivery.

B. Pipe Zone Backfill:
   1. Sand: Sand shall conform to the requirements of SSPWC Section 217-1.

C. Trench Zone Backfill:
   1. Trench Zone Backfill may be sand, native soil or imported soil meeting the above requirements. When a trench is placed in pavement, the upper 12 inches of trench backfill shall be acceptable native soil.

D. Pipe Bedding Material:
   1. Sand: Sand shall conform to the requirements of SSPWC Section 217-1.
   2. Excavated native soil, meeting the above requirements, is not suitable to be used as pipe bedding material.

E. Aggregate Base:
   1. Refer to Section 02700.

F. Structural Backfill:
   1. Structural Backfill shall conform to the requirements of SSPWC Section 217-3, unless specifically indicated on Drawing Sheet S-1.

G. Gravel:
   1. Gravel shall conform to the requirements of SSPWC Sections 201-1.2 and 200-1.3.

H. Water: The water used shall be reasonably free of objectionable quantities of silt, oil, organic matter, alkali, salts, and other impurities. Water quality must be acceptable to the Engineer.

I. Warning Tape: 3-inch-wide, inert, fade-resistant plastic film resistant to acids, alkalis, and other components likely to be encountered in soil. Warning Tape colors shall follow the uniform color code per American Public Works Association (APWA) and shall not be placed more than 12 inches above top of pipe.
   1. Provide: Terra Tape® Standard; T. Christy Enterprises, Inc. T A.ND.3-COLOR-CODE; or equal.
   2. Acceptable Manufacturers: Reef Industries, Inc.; T. Christy Enterprises, Inc.; or equal.
   3. Color code per American Public Works Association (APWA).

PART 3 - EXECUTION

3.01 GENERAL CONSTRUCTION REQUIREMENTS

A. Barriers: Barriers shall be placed at each end of all excavations and at such places along excavations as may be necessary to warn all pedestrian and vehicular traffic of such excavations.

B. Access: Free access must be maintained to all fire hydrants, water valves and meters, and private driveways.

3.02 CONTROL OF WATER

A. Prepare and submit a Dewatering Plan in accordance with Paragraph 1.04.C.
   1. It shall be presumed that the presence of groundwater will require dewatering operations. Dewatering Systems shall be designed to:
      a. Prevent loss of ground as water is removed.
      b. Avoid inducing settlement or damage to existing facilities or completed work.
      c. Relieve artesian pressures and resultant uplift of excavation bottom.

B. All excavations shall be kept free from water and all construction shall be in the dry.
   1. Furnish, install, maintain, and operate all necessary pumping and other equipment for dewatering excavations.
   2. Provide a sufficient number of pumps, including standby pumps, for use in case other pumps become inoperable, as to hold the groundwater level at an elevation of not less than 1 foot below the lowest elevation of the pipe, duct structure or other material or feature to be placed.
   3. The dewatering operation shall be continuous, so that the excavated areas shall be kept free from water while concrete is setting and achieves full strength, and until backfill has been placed to a sufficient height to anchor the work against possible flotation.
   4. Continue dewatering during backfill operations.

5. If the subgrade becomes unsuitable due to failure of dewatering operations, Contractor shall notify and coordinate with the Engineer as soon as failure is identified. The Engineer shall recommend remedial measures, if deemed necessary in the opinion of the Engineer, based on site conditions, proposed design elements for the area and observations made in the field at the time.
6. If pumping is required on a 24-hour basis, requiring engine drives, then engines shall be equipped in a manner to keep noise to a minimum. Refer to City General Provisions for noise control requirements.
7. Protect the Work against floatation.

C. The Contractor shall be responsible for any damage to the Work or existing foundations and structures caused by dewatering operations. Contractor shall repair damage and/or settlement at the Contractor's expense and to the City's satisfaction.

D. During rain events, the Contractor shall take necessary precautions to ensure safety of staff and the Work. Divert stormwater runoff away from the excavation. Direct precipitation within the excavation to a sump and pump it out.

E. The Contractor shall discharge dewatered water in accordance with City General Provisions.
1. It is the Contractor's responsibility to obtain all necessary Storm Water Discharge Permits.

3.03 EXISTING UTILITIES

A. General: The known existing buried utilities and pipelines are shown on the Drawings in their approximate location. The Contractor shall exercise care in avoiding damage to all utilities as he will be held responsible for their repair if damaged. There is no guarantee that all utilities or obstructions are shown, or that locations indicated are accurate. Utilities are piping, conduits, wire, cable, ducts, manholes, pull boxes, and the like, located at the project site.

B. Potholing:
1. Contact all affected utility owners and request them to locate their respective utilities prior to the start of "potholing" procedures. The utility owner shall be given 7 days written notice prior to commencing potholing. If a utility owner is not equipped to locate its utility, the Contractor shall locate it.
2. Clearly paint the location of all affected utility underground pipes, conduits, and other utilities on the pavement or identify the location with suitable markers if not on pavement. In addition to the location of metallic pipes and conduits, non-metallic pipe, ducts, and conduits shall also be similarly located using surface indicators and detection tape if present and shall then be similarly marked.
3. After the utility survey is completed, commence "potholing" to determine the actual location and elevation of all utilities where crossings, interferences, or connections to new pipelines or other facilities are shown on the Drawings, marked by the utility companies, or indicated by surface signs. Prior to the preparation of piping shop drawings, or the excavating for any new pipelines or structures, the Contractor shall locate and uncover these existing utilities including services and laterals to a point 1 foot below the utility. Submit a report identifying each underground utility and its depth and location. Any variation in the actual elevations and the indicated elevations shall be brought to the Engineer's attention.

4. Excavations around underground electrical ducts and conduits shall be performed using extreme caution to prevent injury to workmen or damage to electrical ducts or conduits. Similar precautions shall be exercised around gas lines, telephone, and television cables.
5. Excavations shall have a surface dimension of no more than 18-inch by 18-inch. Air spades and vacuum excavators shall be used to limit the size of the excavation and damage to adjacent facilities. Backfill after completing potholing.
6. City approval is required prior to using slot trenches.

C. Interferences:
1. If interferences occur at locations other than shown on the Drawings, the Contractor shall notify the Engineer, and a method for correcting said interferences shall be supplied by the Engineer. Payment for interferences that are not shown on the Drawings, nor which may be inferred from surface indications, shall be in accordance with the provisions of the General Conditions. If the Contractor does not expose all required utilities prior to shop drawing preparation, he shall not be entitled to additional compensation for work necessary to avoid interferences, nor for repair to damaged utilities.
2. Any necessary relocations of utilities, whether shown on the Drawings or not, shall be coordinated with the affected utility. The Contractor shall perform the relocation only if instructed to do so in writing from the Engineer.

D. Shutdowns: Refer to City General Provisions.

3.04 SITE EXCAVATION

A. Remove lumped subsoil and rock up to ½ cubic yard, measured by volume.

B. The maximum allowable temporary slope during excavation range is 1 1/2H:1V.

C. Take care not to excavate beyond the limits shown as there shall be no additional payment to the Contractor for excavations beyond the limits shown in the Drawings.

D. If unsatisfactory material is encountered at the bottom of excavation, coordinate with the Engineer steps to remove and replace with material approved by the Engineer. Payment for removal and replacement of unsatisfactory material shall be made in accordance with the provisions of the General Conditions.

E. Backfill and compact excavations, beyond the limits shown in the Drawings, in accordance with the requirements of Paragraph 3.11 with material approved by the Engineer.

F. Provide erosion control protection in accordance with City General Provisions.

3.05 TRENCH EXCAVATION

A. Excavation for pipe and other utilities such as duct banks shall be in open cut. The trench shall be as wide as necessary for sheeting and bracing and the proper performance of the work up to the maximum width permitted as shown on the Drawings. The sides of the trenches shall be vertical in paved areas. The bottom of the trench shall be constructed to the grades and shapes indicated on the Drawings. Favorable review by the City and Engineer is required prior to use of alternative methods of construction.

B. Remove lumped subsoil and rock up to ½ cubic yard, measured by volume.

C. Do not advance open trench more than 400 feet ahead of installed pipe.

D. Accurately grade the bottom of the trenches to provide uniform bearing and support for each section of the pipe or conduit at every point along its entire length, except for the portions of the pipe sections where it is necessary to excavate for bell holes and for the proper sealing of pipe joints, and as hereinafter specified. Dig bell holes and depressions for joints after the trench bottom has been graded. For the pipe to rest on the bedding for as nearly its full length as practicable, bell holes and depressions shall be only of such length, depth, and width as required for properly making the joint. Remove stones as necessary to avoid point bearing.

E. The trench shall not be backfilled until the Engineer favorably reviews the pipe and bedding installation.

F. Take care not to excavate beyond the limits shown as there shall be no additional payment to the Contractor for excavations beyond the limits shown in the Drawings.

G. If unsatisfactory material is encountered at the bottom of excavation, coordinate with the Engineer steps to remove and replace with material approved by the Engineer. Payment for removal and replacement of unsatisfactory material shall be made in accordance with the provisions of the General Conditions.

H. Backfill and compact excavations, beyond the limits shown in the Drawings, in accordance with the requirements of Paragraph 3.11 with material approved by the Engineer.

I. If no elevations are shown on the Drawings, provide 3 feet of minimum cover.

J. For all piping or conduits to be placed in any excavated and backfilled area, such as at manholes or for building connections, the structural backfill shall be first compacted to a level at least 3 feet from the top of the conduit elevation and then retrenched to conduit grade.

K. Provide secured ladders for access to the trench by construction and inspection personnel. Additional secured ladders shall be provided to any structure or pipe that must be inspected and tested. Failure to provide safe inspection access shall void initial inspection and follow up inspection shall not be performed until proper safe access is provided to the items to be inspected.

3.06 EXCAVATION FOR STRUCTURES

A. All excavation for structures shall be done to the dimensions and levels indicated on the Drawings or specified herein. Excavate to such width outside the lines of the structure to be constructed as may be required for proper working methods, the erection of forms, and the protection of the work.

B. Take care to preserve the foundation surfaces shown on the Drawings in an undisturbed condition. If the Contractor over excavates or disturbs the foundation surfaces shown on the Drawings or specified herein, without written authorization of the Engineer, they shall replace such foundations with concrete fill or other material approved by the Engineer in a manner that will show by test an equal bearing value with the undisturbed foundation material. No additional payment will be made for the added quantity of concrete fill or other material used because of over excavation.

C. Inspection of Excavation: Notify the Engineer when excavation for the structure is complete. No forms, reinforcing steel, concrete, or precast structure shall be placed until the excavation has been inspected and approved by the Engineer.

3.07 SUBGRADE PREPARATION:

A. Finished Subgrade: Finished subgrade material may be native soil (following clearing and grubbing) or import material and prepared to be non-yielding when proof-rolled by passing over all areas to receive fille or as required by the Engineer with a minimum 10-ton roller, front-end loader with loaded bucket, or other heavy rubber-tired vehicle with high tire pressure (e.g., loaded tandem dump truck), in the presence of the Engineer. If subgrade is unstable, wet, or soft and air-drying is not an option, Contractor shall coordinate with the Engineer for corrective methods prior to placing subsequent lifts.

B. Fill Subgrade: Fill Subgrade (prior to placement of any fill material) shall be native soil or import material (following clearing and grubbing) prepared to be non-yielding when proof-rolled by passing over all required areas with a minimum 10-ton roller, front-end loader with loaded bucket, or other heavy rubber-tired vehicle with high tire pressure (e.g., loaded tandem dump truck) in the presence of the Engineer. If subgrade is unstable, wet, or soft, Contractor shall coordinate with the Engineer for corrective methods prior to placing subsequent lifts.

C. Unstable Soils
   1. If the bottom of the excavation is soft or unstable, and in the opinion of the Engineer, cannot satisfactorily support the pipe, structure or other related design elements, the Engineer will determine proper corrective methods. Payment for removal and replacement or other corrective methods shall be made in accordance with the provisions of the General Conditions.

3.08 SUPPORT OF EXCAVATIONS

A. Adequately support excavation for trenches and structures to meet all applicable requirements in the current rules, orders, and regulations. Excavation shall be adequately shored, braced, and sheeted so that the earth will not slide or settle and so that all existing structures and all new pipe and structures will be fully protected from damage. Keep vehicles, equipment, and materials far enough from the excavation to prevent instability.

B. Take all necessary measures to protect excavations and adjacent improvements from running, caving, boiling, settling, or sliding soil resulting from the high groundwater table and the nature of the soil excavated. See Section 832 of the Civil Code of the State of California relating to lateral sub adjacent supports, and wherever structures or improvements adjacent to the excavation may be damaged by such excavation, the Contractor shall comply with this law.

C. The support for excavation shall remain in place until the pipeline or structure has been completed. During the backfilling of the pipeline or structure, the shoring, sheeting, and bracing shall be carefully removed so that there shall be no voids created and no caving, lateral movement, or flowing of the subsoils.

3.09 SITE AND TRENCH BACKFILL

A. Backfill materials shall be compacted by vibrating, tamping, or a combination thereof. Compact materials in accordance with Paragraph 3.11unless otherwise specified or shown on the Drawings.

B. Site Backfill
   1. Do not place any backfill material until the Engineer has inspected, tested to his or her satisfaction, and favorably reviewed the prepared subgrade.
   2. Construct fills as shown on the Drawings, true to line, grade, and cross-section.
   3. Construct fills of native soil or imported soil. Place material in uniform, level layers, not exceeding 8 inches thick measured before compaction and carried across the entire width to the required slopes.
   4. Soft zones identified during site backfill operations shall be addressed as identified under Paragraph 3.08.

C. Trench Backfill:
   1. Place trench materials true to the lines, grades, and details indicated on the Drawings.
   2. Place trench materials in uniform, level layers, not exceeding *6* inches thick measured before compaction. The difference in level on either side of a pipe shall not to exceed 4 inches.
   3. Backfill material shall not be placed over the pipe or conduit until after the joints have been completed and inspected by the Engineer.
   4. Protect the pipe or conduit from damage during the construction period. It shall be the Contractor's responsibility to repair broken or damaged pipe at no extra cost to the City. Once repair is inspected and approved by the City, contractor shall retest the line. Carefully place backfill around and over the pipe and do not allow it to fall directly upon the pipe. Tamping of backfill over the pipe shall be done with tampers, vibratory rollers, and other machines that will not injure or disturb the pipe.
   5. Do not allow construction traffic over the pipe trench until the trench has been backfilled to be even with the existing adjacent grade, temporary AC pavement has been placed over the backfilled trench and/or a traffic rated metal plate has been placed over the trench.

D. Import Backfill: The removal and replacement limits and quantity of import backfill material shall be coordinated and accepted by the Engineer and governing authority prior to proceeding with the installation.

3.10 BACKFILL UNDER / ADJACENT TO STRUCTURES

A. Compact materials in accordance with Paragraph 3.11 unless otherwise specified or shown on the Drawings.

B. Aggregate Base shall be placed in uniform, level layers, not exceeding 6 inches thick measured before compaction under structures, meter vaults, and electrical vaults.

C. Installation of Structure Backfill shall conform to the requirements as indicated on Drawing Sheet S-1.

D. Backfill Adjacent to Structures
   1. Do not place backfill against structures until the concrete has been patched and cured.

2. Do not place backfill against structures until at least 28 days after the concrete was placed, or until the concrete has achieved a strength of at least 2,500 psi, whichever is earlier. Concrete strength shall be demonstrated by field cured cylinders tested at the Contractor's cost, prepared and tested in accordance with ASTM C31 and ASTM C39.
3. Do not place backfill against hydraulic structures until the structure has passed the specified leakage tests.
4. Place Structural Backfill within 2 feet of a structure or as shown on the Drawings.
5. Place structural backfill in uniform, level layers, not exceeding 6-inches thick measured before compaction. Bring backfill up uniformly on all sides of the structure, and on both sides of buried walls.

3.11 COMPACTION

A. Add water to the backfill material or dry the material as necessary to obtain moisture content within 2 percent of optimum. Employ such means as may be necessary to secure a uniform moisture content throughout the material of each layer being compacted.
   1. Contractor shall use air-drying to reduce moisture content and/or achieve compaction before other methods may be considered. Or, where applicable, Contractor shall demonstrate air-drying is not possible before other methods may be considered.

B. When densities of compacted materials do not meet the requirements, remove and/or recompact the material until the requirements are met. The Contractor will be back charged the cost of retesting all failing tests, including the initial retest. Such back charges will be deducted from the Contractor's Progress Payments.

C. After the material has been moisture conditioned, compact it with compaction equipment appropriate for the use to achieve specified compaction.

D. If the backfill material becomes saturated through negligence or otherwise, remove the faulty material and replace it with suitable material compacted to the specified density at no additional cost to the City.

E. Compact materials in accordance with AASHTO T99 OR ASTM D1557 (Modified Proctor) unless otherwise specified.

F. Compaction of embankment and backfill materials by flooding, ponding, or jetting is not permitted.

G. Material Requirements

	Material	**Minimum Relative Compaction[1]**
1.	Engineered Fill: Native Soil Import Soil	 95 percent 95 percent
2.	Pipe Zone Backfill	90 percent
3.	Trench Zone Backfill	95 percent in paved areas 90 percent in unpaved areas
4.	Pipe Bedding	80 percent
7.	Subgrade	95 percent in paved areas 90 percent in unpaved areas

	Material	Minimum Relative Compaction[1]
8.	Aggregate Base	Refer to Section 02700.
9.	Structure Backfill	95 percent

[1] Modified Proctor Test

3.12 SITE GRADING

A. Compact materials in accordance with Paragraph 3.11 unless otherwise specified or shown on the Drawings.

B. Except where shown otherwise in the Drawings, restore the finish grade to the original contours and to the original drainage patterns. Grade surfaces to drain away from structures at a minimum of 2 percent, unless otherwise noted in the Drawings.

END OF SECTION

SECTION 02516

DISINFECTION

PART 1 - GENERAL

1.01 SUMMARY

A. Section Includes:
   1. Clean, flush and disinfect all surfaces with which the process water may come in contact in the pipelines, and accessories, including:
      a. Small pipelines:
         1) Domestic water piping.
   2. Dispose of disinfection solution.

1.02 REFERENCES

A. American Water Works Association (AWWA):
   1. C651 AWWA Standard for Disinfecting Water Mains
   2. C655 AWWA Field Dechlorination
   3. C670 AWWA Online Chlorine Analyzer Operation and Maintenance

B. Standard Methods for Examination of Water and Wastewater
   1. 9221 - Multiple Tube Fermentation Technique
   2. 9222 - Membrane Filter Technique
   3. 9223 - Chromogenic Substrate Coliform Test
   4. NSF/ANSI Standard 60: Drinking Water Treatment Chemicals - Health Effects
   5. NSF/ANSI Standard 61: Drinking Water System Components - Health Effects

1.03 SCHEDULING

A. Schedule and coordinate the work with the City and Engineer. Once disinfection has been satisfactorily accomplished, no further entry to the interior of the facilities will be allowed unless entry must be made to perform repairs, in which case repeat disinfection on a localized basis at no additional cost to the City. The Contractor shall be responsible for maintaining security of the disinfected facilities.

B. Disinfect d pipelines following successful pressure testing.

1.04 SUBMITTALS

A. Submit in accordance with City General Provisions.

B. Submit a Disinfection Plan in the Product Review category including the procedures, methods, materials and schedules proposed for disinfecting the required surfaces, and method of disposal of chlorinated water.

1.05 QUALITY ASSURANCE

A. Laboratory testing related to disinfection will be performed by and paid for by the City.

PART 2 - PRODUCTS

2.01 MATERIALS

A. Potable Water: Use potable water to flush and disinfect: all other small and ancillary equipment and piping systems.

B. Chlorine: See the respective AWWA Standards and paragraph 3.02 below for forms of chlorine that may be used for disinfecting operations.

PART 3 - EXECUTION

3.01 PREPARATION

A. Provide all necessary appurtenances required for the disinfection procedures including taps, temporary piping, connections and shutoff valves. Submit data on appurtenances which will be permanently installed for review by the Engineer.

B. The Contractor is advised that precautions taken to keep surfaces clean during construction and avoiding the entry of deleterious substances on the work during construction will facilitate achieving the disinfection requirements of this project.

C. Prior to disinfecting, thoroughly clean accessible surfaces of dust, dirt, foreign matter and deleterious substances. Remove any oil by contact with absorbents. Use water sprays, steam cleaning, vacuum cleaning, swabbing, hand brushing or a combination of methods and rinsing to effect the cleaning, but do not use any method that will be detrimental to the finish surfaces. Flush inaccessible surfaces clean.

3.02 APPLICATION

A. After completing all construction activities, disinfect the required surfaces with chlorine solutions in accordance with the following procedures. Following disinfection and flushing, the City will take water samples for chlorine residual and bacteriological analysis of the water. If the specified chlorine residual and bacteriological requirements are not satisfied, repeat disinfection procedure until the requirements are met. The Contractor shall pay for the additional sampling and testing at no additional cost to the City, until disinfection requirements are met.

B. Small Pipelines:
   1. Preparation: Provide the system with a 1-inch minimum service cock or valve or other means to inject chlorine solution at a point within 2 or 3 feet of its junction with the supply source. When system is complete, thoroughly flush it by fully opening every outlet until clear water flows from all of them.
   2. Disinfecting Agent: Sodium hypochlorite or calcium hypochlorite in sufficient quantities to produce chlorine concentration of at least 50 parts per million in the system.
   3. Disinfecting Procedure:
      a. Connect a hand-operated pump, or other means of injecting the disinfecting agent, to one-inch minimum service cock or valve or other injection device. Pump must provide a pressure greater than that of supply of system.

b. With system completely full of water and supply valve open, proceed to adjust every outlet of system so that a trickle of water flows from each.
c. Inject disinfectant slowly and continuously at an even rate, not in slugs, until a test at each outlet shows a free chlorine residual concentration of at least 50 parts per million.
d. Close all outlets and valves, including valve connecting to supply line and one-inch minimum service cock on solution injection connection. Maintain condition for 24 hours. After 24 hours, test for residual chlorine at each outlet. The free residual chlorine concentration indicated should be not less than 10 ppm. If the indicated free chlorine concentration is less than 10 ppm, repeat disinfection procedure until an approved result is obtained.
e. When the above procedure has been completed to the satisfaction of the Engineer, flush out entire system with fresh water until tests at all outlets show a residual of not more than 0.5 ppm.

3.03 FIELD QUALITY CONTROL

A. Chlorine Residual Testing: AWWA C651, Appendix A, DPD Drop Dilution Method, except where otherwise specified. Testing shall be performed by the Contractor.

B. Bacteriological Analyses of Water: After the completion of disinfecting procedure, including the final flushing as described in AWWA C651 and heretofore, the Contractor will obtain water samples from this system for bacteriological analyses.

C. Requirements for satisfactory disinfection of process equipment, tanks, pipelines and associated elements are:
1. Bacteriological analyses indicate that water samples are negative for coliform organisms; and
2. Heterotrophic plate count (standard plate count) is less than 100 colony forming units per milliliter.
3. If bacteriological analyses do not satisfy the above requirements, then repeat disinfection procedure until these requirements are met.

D. Dechlorinate and dispose of disinfection solution in thesanitary sewer . Take care to assure that chlorinated water is not spilled into drains.

3.04 PROTECTION OF DISINFECTED STRUCTURES

A. If required to re-enter a disinfected structure, the work shall be conducted using techniques and work methods as necessary to maintain the disinfected status. This shall include use of disinfected foot coverings, tools, and the like. In the event the Contractor contaminates the facilities, additional flushing and disinfection of the affected system shall be performed at no additional cost to the City.

END OF SECTION

THIS PAGE INTENTIONALLY BLANK

SECTION 02700

PAVING AND SURFACING

PART 1 - GENERAL

1.01 SUMMARY

A. Furnish all labor, material, equipment, tools, and services required for removing, placing and compacting asphalt concrete pavement for the parking lot/open area to the lines, grades, and dimensions shown on the Drawings and as specified herein.
   1. Demolish existing asphalt paving.
   2. Repair and resurface existing asphalt pavement damaged during construction.
   3. Install asphalt pavement.

1.02 REFERENCES

A. ASTM International (ASTM):
   1. D422 Test Method for Particle-Size Analysis for Soils
   2. D1556 Test Method for Density and Unit Weight of Soil in Place by the Sand-Cone Method
   3. D1557 Standard Test Methods for Laboratory Compaction Characteristics of Soil Using Modified Effort (Modified Proctor)
   4. D2922 Test Methods for Density of Soil and Soil-Aggregate in Place by Nuclear Methods (Shallow Depth)

B. California Department of Transportation (Caltrans):
   1. California Test 216 Method of Test for Relative Compaction of Untreated and Treated Soils and Aggregates
   2. California Test 231 Method of Test for Relative Compaction of Untreated and Treated Soils and Aggregates by the Area Concept Utilizing Nuclear Gauges

C. Standard Specifications for Public Works Construction (SSPWC), aka "Greenbook"

D. City of Carlsbad Standard Specifications (City Standard Specifications)

E. City of Carlsbad Utilities Department Standard Specifications (Agency Standard Specifications)

1.03 DEFINITIONS

A. Base (aggregate base): Layer of material of certain thickness placed under the pavement, constructed on subgrade. It provides a working surface for pavement placement, load distribution, and drainage.

B. Leveling course: Lift of asphalt concrete used to fill and level irregularities prior to placement of the wearing course.

C. PG: Performance graded. The PG system defines the asphalt binder based on the conditions in which it may be used.

D. Prime Coat: Emulsified asphalt used for water-proofing the base layer prior to placing asphalt concrete.

E. Subgrade: See Section 02300.

F. Tack Coat: Emulsified asphalt used to bond asphalt concrete to existing asphalt concrete, or to bond between asphalt concrete lifts.

G. Wearing course: Final lift of asphalt concrete.

1.04 SUBMITTALS

A. Submit in accordance with City General Provisions.

B. Submit the following under the Product Data:
   1. Submit a signed verification from each source of supply for each construction material employed on this project indicating that the materials meet the Specification requirements.
   2. Mix design for asphalt concrete in accordance with SSPWC Section 203-6.3.
   3. Submit manufacturer's certification of the actual volatile organic compound (VOC) content for all pavement paints and bituminous pavement sealers proposed for use on this project. Submit certification of the actual VOC content for all coatings. VOC content shall be measured in grams per liter by weight of coating as applied excluding water and color added to the tint base.
   4. Submit verification that bituminous pavement sealers and paint products furnished meet San Diego County Air Pollution Control District (APCD) regulations as to allowable VOC content for the time and place of application and use intended.

C. Submit the following under Samples and Test Results:
   1. Furnish, without additional cost to the Owner, such quantities of construction materials as may be required by the Engineer for test purposes. The Contractor shall cooperate with the Engineer and furnish necessary facilities for sampling and testing of all materials and workmanship. All materials furnished and all work performed shall be subject to rigid inspection, and no materials shall be used in the construction work until it has been inspected by the Engineer.

1.05 QUALITY ASSURANCE

A. Storage and transportation of asphalt concrete shall comply with SSPWC Section 203-6.8 and 203-6.9.

B. All pavement stripe painting shall be performed by competent and experienced Equipment operators and painters using proper equipment, tools, stencils, templates, and shields in a workmanlike manner.

1.06 REGULATORY REQUIREMENTS

A. All work, material, procedures, and practices under this Section shall conform to requirements of the California Air Resources Board (CARB) and San Diego County Air Pollution Control District (APCD)

PART 2 - PRODUCTS

2.01 ASPHALT CONCRETE

A. Asphalt Concrete Mix shall be in accordance with SSPWC Section 203-6.4.

2.02 TACK COAT

A. Material for tack coat shall comply with SSPWC Section 302-5.4.

2.03 AGGREGATE BASE

A. Aggregate base shall conform to SSPWC Section 200-2. Aggregate base shall conform to that specified for 3/4-inch maximum, unless otherwise indicated.

2.04 DISTRIBUTING EQUIPMENT

A. Distributors shall be of the pressure type with insulated tanks and shall be equipped with the following:
   1. A tachometer of the auxiliary wheel type, which registers speed in feet per minute.
   2. Charts and devices to provide for accurate and rapid determination and control of the amount of asphalt being applied.
   3. A hose and nozzle attachment to be used for areas inaccessible to the spray bar.
   4. A pressure gauge for determining application pressure.
   5. A thermometer for determining temperature of the asphalt.

   Distributors and booster tanks shall be so maintained as to prevent dripping of asphalt from any part of the equipment.

   Spray bars shall have a minimum length of 9 feet. Spray bars and extensions shall be the full circulating type and shall be adjustable to permit varying height above the surface to be treated.

   The nozzles attached to the bar shall be either the conical or flat slotted type. The distance center to center of the nozzles shall not exceed 6 inches. The valves, which control the flow from nozzles, shall be of a positive acting design so as to provide a uniform unbroken spread of asphalt on the surface. Valves shall be operated so that all valves may be simultaneously opened or closed. Each valve shall also be capable of similar independent control.

   Spreading equipment shall be so designed and articulated that uniform application of the asphalt, in controlled amounts, may be made ranging from 0.02 to 1.0 gallon per square yard of surface and with a range of pressure from 25 to 75 psi.

B. A trough shall be located under the sprays, properly arranged to be swung out of the way after the sprays are operating in a uniform manner at the desired pressure or, in lieu thereof, building paper shall be spread over the treated surface for a sufficient length back so that the sprays are operating properly when the uncovered surface is reached. The building paper shall then be removed and disposed of. If the cutoff is not sufficiently positive, the similar use of paper may be required at the end of the area being covered. The distributor shall be operated in such a manner that liquid asphalt will not be splashed on adjacent guardrails or structures. Any asphalt so splashed may be removed at the expense of and by the Contractor.

PART 3 - EXECUTION

3.01 GENERAL

A. Where trenching or other construction activity has resulted in damage to a localized area of pavement, the damaged pavement shall be cut back 6 inches, removed and replaced.

B. Where the demolition or damaged area extends over more than 50% of the road width or paved area, as determined by the Engineer, the full pavement width or area shall be removed and replaced.

C. Structures such as valve boxes, manhole frames and covers, and electrical vaults shall be adjusted to grade as necessary within paved areas.

D. Existing asphalt pavement islands of 50 square-feet or less and strips 18 inches or less in width shall be removed and replaced.

E. Adjust existing manholes, meter boxes, cleanouts, etc. to match the new grade.

3.02 PAVEMENT CUTTING

A. Where trenching or excavation occurs in paved areas, the existing pavement shall be scored and broken ahead of the trenching or excavation operation. The extent of paving removed shall be limited to the minimum necessary for the excavation. All existing asphalt or concrete surfacing shall be saw cut vertically in a straight line and removed from the jobsite prior to starting the trench excavation. This material shall not be used in any fill or backfill.

B. Pavement shall be cut accurately and on neat lines. The asphalt pavement shall be saw cut to a minimum depth equal to or greater than one-half the thickness of the pavement section. Any pavement damaged outside these lines shall be re-cut and restored at the expense of the Contractor. Should voids develop under existing pavements during construction, Contractor shall remove the affected pavement, repair voids and replacement pavement section at the expense of the Contractor.

C. Construct joints between successive runs that are vertical and at right angles to the line of the improvement. Exercise care in construction of all joints to ensure that the surface of the pavement is true to grade and cross-section. Lapped joints will not be permitted.

3.03 PLACEMENT OF AGGREGATE BASE

A. Subgrade Preparation: Refer to Section 02300.

B. Aggregate Base Tolerance: The aggregate base shall not be placed before the subgrade is approved by the Engineer. The finished aggregate base shall not vary more than 1 inch above or below, the planned grade.

C. Aggregate Base Placing: The aggregate base material shall be spread on the prepared subgrade by means of approved spreading devices subject to approval by the Engineer; the aggregate base material may be dumped in piles upon the subgrade and spread by bulldozing ahead from the dumped material. Each layer shall not exceed 6 inches. Segregation of large or fine particles of aggregate shall be avoided, and the material as spread shall be free from pockets of large and fine material. The aggregate base material shall be in accordance with SSPWC Section 301-2.

D. Compaction: Compaction shall be in accordance with SSPWC Section 301-2.3.

3.04 PRIME COAT APPLICATION

A. Prime Coat: A prime coat shall be applied to all base course surface areas to be covered with asphalt concrete.
   1. Preparation: Immediately before applying the prime coat, the area to be surfaced shall be cleaned of all loose material by means of hand brooms.
   2. Application: Place prime coat in accordance with SSPWC Section 302-5.3.

3.05 TACK COAT APPLICATION

A. Tack Coat: In advance of spreading bituminous material upon an existing bituminous or portland cement concrete surface, a tack coat shall be applied to all areas to be surfaced and to all vertical surfaces of existing pavement, curb, gutters and construction joints in the surfacing against which additional material is to be placed. Apply tack coat only as far in advance as necessary for that day's installation.
   1. When two or more lifts of asphalt concrete are required, a tack coat shall be applied between each lift unless the lifts are placed in the same work shift if:
      a. No dust, dirt or extraneous material is present
      b. Surface is at least 140 degrees F
   2. Preparation: Immediately before applying a tack coat, the area to be surfaced shall be cleaned of all loose material.
   3. Application: The tack coat shall be applied by means of pressure distributors by pressure hand-spray equipment. The rate of application shall be 0.05 gallon per square yard for PG 64-10 or 0.05 to 0.10 gal per square yard for SS-1h emulsified asphalt. Emulsified asphalt shall not be applied when the atmospheric temperature is below 40°F. Place tack coat in accordance with SSPWC Section 302-5.4. Cover drain inlets (if applicable), and manholes (if applicable) during the application of tack coats.

3.06 PLACEMENT OF ASPHALT CONCRETE

A. Delivery and Spreading: Delivery, distribution and spreading shall be in accordance with SSPWC Section 302-5.5.

B. Compaction: Initial or breakdown rolling and the final rolling of the uppermost layer of the asphalt concrete shall be compacted in accordance with SSPWC Section 302-5.6. Compaction by vehicular traffic shall not be permitted. The Engineer reserves the right to require an adjustment of the temperature of the asphalt concrete at the time of placement.

C. Pavement Thickness: Pavement shall match the existing adjoining pavement in thickness, or as indicated on the Drawings, or as specified, whichever is greater.

D. Joining Pavement: The joints between old and new pavements or between successive days' work shall be carefully made in such manner as to ensure a continuous bond between old and new sections of the course. Edges of existing pavement shall be exposed and cleaned and edges cut to straight, vertical surfaces. All joints shall be painted with a uniform coat of tack coat before the fresh mixture is applied.

E. Protection of Pavement: After final rolling, no vehicular traffic of any kind shall be permitted on the pavement until it has cooled and hardened and in no case less than 6 hours.

3.07 REPLACEMENT OF TEMPORARY PAVEMENT

A. Final pavement restoration shall be made as soon as practicable after backfilling. In that period of time between backfilling and final pavement restoration, the trench shall be maintained level with the adjacent pavement and shall be covered with a 1-inch minimum layer of temporary pavement. Prior to placing the final pavement, the temporary pavement shall be removed, the aggregate base excavated to the lines indicated on the Drawings, and the existing pavement edges saw cut as herein specified. The final asphalt pavement shall not be placed before the aggregate base is approved by the Engineer and a tack coat applied to existing paved surfaces.

END OF SECTION

SECTION 10200

LOUVERS

PART 1 - GENERAL

1.01 SUMMARY

Section Includes:

A. Fixed-Blade Extruded-Aluminum Louvers:
   1. Horizontal drainable-blade louver.

B. Fixed Blade Acoustic Louvers.

C. Louver Screens.

1.02 REFERENCES

A. Air Movement and Control Association International, Inc. (AMCA)
   1. AMCA 500-L — Laboratory Methods of Testing Louvers for Rating
   2. Standard 501 — Louver Application Manual and Design Guide
   3. AMCA 511 — Certified Ratings Program - Product Rating Manual for Air Control Devices.

B. ASTM International (ASTM):
   1. B117 — Standard Practice for Operating Salt Spray (Fog) Apparatus
   2. B221 — Standard Specification for Aluminum and Aluminum-Alloy Extruded Bars, Rods, Wire, Profiles, and Tubes
   3. D822 — Standard Practice for Filtered Open-Flame Carbon-Arc Exposures of Paint and Related Coatings
   4. D1187 — Standard Specification for Asphalt-Base Emulsions for Use as Protective Coatings for Metal
   5. D1308 — Standard Test Method for Effect of Household Chemicals on Clear and Pigmented Organic Finishes
   6. D2247 — Standard Practice for Testing Water Resistance of Coatings in 100% Relative Humidity
   7. D2794 — Standard Test Method for Resistance of Organic Coatings to the Effects of Rapid Deformation (Impact)
   8. D3359 — Standard Test Methods for Rating Adhesion by Tape Test
   9. E90 — Standard Test Method for Laboratory Measurement of Airborne Sound Transmission Loss of Building Partitions and Elements
   10. E413 — Classification for Rating Sound Insulation

C. “Architectural Sheet Metal Standards” by Sheet Metal and Air Conditioning Contractors National Association (SMACNA), latest edition.

D. California Building Standards Commission
   1. 2022 California Building Code (CBC) (California Code of Regulations, Title 24)

E. International Code Council (ICC):
   1. 2021 International Building Code (IBC)

F. Fenestration & Glazing Industry Alliance (FGIA):
   1. AAMA 611 Voluntary Specification for Anodized Architectural Aluminum

1.03 SUBMITTALS

A. Product Data: Manufacturer's data sheets for each product and assembly specified.
   1. Preparation instructions and recommendations.
   2. Storage and handling requirements and recommendations.
   3. Cleaning methods.

B. Shop Drawings: Custom prepared for this project.
   1. Include plans; elevations; sections; and details showing profiles, angles, and spacing of elements. Show unit dimensions related to wall openings and adjacent construction; free area for each size indicated for louvers; profiles of frames at jambs, heads, and sills; and anchorage details and locations.
   2. Verify openings by field measurements before fabrication and indicate measurements on Shop Drawings.

C. Product Certificates:
   1. Air Performance: Certificates signed by Air Movement and Control Association International Inc (AMCA) certifying that the manufacturer's stock units are tested in accordance with AMCA Standard 500 and are licensed to bear the AMCA Certified Ratings Seal in accordance with AMCA Standard 511.
   2. Water Penetration: Certificates signed by Air Movement and Control Association International Inc (AMCA) certifying that the manufacturer's stock units are tested in accordance with AMCA Standard 500 and are licensed to bear the AMCA Certified Ratings Seal in accordance with AMCA Standard 511.
   3. Weather Louver Effectiveness: Certificates signed by Air Movement and Control Association International Inc (AMCA) certifying that the manufacturer's stock units are tested in accordance with AMCA Standard 500-L99, Section 8.3.2 - Wind Driven Rain Water Penetration Test, and are licensed to bear the AMCA Certified Ratings Seal in accordance with AMCA Standard 511.

D. Selection Samples: Two complete color charts showing the full range of colors available for units with factory-applied color finishes.

1.04 QUALITY ASSURANCE

A. Manufacturer Qualifications: Minimum 5-year manufacturing similar products.

B. Installer Qualifications: Minimum 2-year experience installing similar louvers.

C. Source Limitations: Obtain products through one source from a single manufacturer where alike in one or more respects regarding type, design, or factory-applied color finish.

D. AMCA Standard 500-L: Air performance, water penetration and air leakage ratings shall be determined in accordance with Air Movement and Control Association

International Inc (AMCA) Standard 500, “Laboratory Methods of Testing Louvers for Rating.”

E. SMACNA Standard: Comply with SMACNA's “Architectural Sheet Metal Manual” recommendations for fabrication, construction details, and installation procedures.

1.05 DELIVERY, STORAGE, AND HANDLING

A. Deliver, store and handle materials and products in strict compliance with manufacturer's instructions and recommendations, and industry standards.

B. Store products indoors in manufacturer's or fabricator's original containers and packaging, with labels clearly identifying product name and manufacturer. Protect from damage.

C. Handling: Protect materials and finishes during handling and installation to prevent damage.

1.06 SEQUENCING AND SCHEDULING

A. Field Measurements: Verify openings and adjacent construction by field measurements before fabrication and indicate measurements on Shop Drawings. Coordinate fabrication schedule with construction progress to avoid delaying the Work.

PART 2 - PRODUCTS

2.01 GENERAL REQUIREMENTS FOR STATIONARY AND ACOUSTIC LOUVERS.

A. Provide louvers that have all joints concealed.

B. Continuously weld all joints in the louver assembly using a shielded arc process.

C. Provide all related break shape and extruded aluminum sills, flashings and sub-frames. Flashings shall be 0.050 or thicker as indicated.

D. Provide matching 1/8-inch thick dark bronze anodized aluminum backing plates to cover the rear of decorative louvers and portions of louvers outside of air intake or exhaust ductwork.

E. Provide all required aluminum angles, tees, plates and other shapes required for a complete installation.

2.02 FIXED-BLADE EXTRUDED-ALUMINUM LOUVERS

A. Acceptable Manufacturers: Louver style K6744 exposed vertical mullion type , manufactured by Airolite; Construction Specialties; Ruskin; or equal.

B. Design Criteria: Design and test louvers to AMCA Standard 500-L and shall bear AMCA certified rating seals for air performance and water penetration. Test a 4x4-foot louver with a minimum free area of 7.89 square feet to pass at least 800 FPM through the free area at a pressure drop not exceeding 0.15 in W.G. Limit water penetration to 10 ounces of water per square foot of free area when tested at 720 FPM for 15 minutes per AMCA Standard 500-L.

C. AMCA Seal: Mark units with AMCA Certified Ratings Seal.

D. Provide extruded aluminum framed continuous blade louvers with exposed jambs and mullions, 4 inches deep with blades spaced 3 inches on center. Use aluminum extrusions; ASTM B 221 alloy 6063-T52 for all parts.

E. Use extruded horizontal drainable blades, 12-gauge (0.81 inches) thick, having a downward turned stiffening leg along the front bottom edge and an up turned leg with a forward-facing lip to stop water migration along the top rear edge. Use blades that have an extruded hood on their bottom surface to interlock with mullion support brackets. Set louver blades at a 30-degree angle for exhaust and 45-degree angle for intake.

2.03 ACOUSTIC LOUVERS

A. Model: T9112 as manufactured by Airolite; Construction Specialties; Ruskin; or equal.

B. Design Criteria: Louvers shall be acoustic type incorporating stationary, parallelogram blades in a single frame. Louvers shall be 12-inches deep and assembled entirely from fabricated aluminum components. Blades and frames shall be 0.080-inch thick aluminum, alloy 5052-H32. Blades shall be positioned at 45-degrees and spaced 5-inches on center. Each blade and top and bottom frame cavity shall be filled with fiberglass acoustic insulation to absorb the transmission of sound. Acoustic insulation shall be held in place by perforated aluminum panels. Acoustic insulation to be protected by a woven fire-retardant (self-extinguishing) 100% polyester sheeting. Fasteners to be aluminum or stainless steel. Structural supports shall be designed and furnished by the louver manufacturer to carry a wind load of 25 psf.

C. Louver Size: As shown on Drawings.

D. Performance Data:
1. Based on testing 48-inch x 48-inch size unit in accordance with AMCA 500-L.
2. Free Area: 25 percent, nominal.
3. Minimum Free Area Size: 4.07 square feet.

E. Minimum Air Performance & Water
1. Penetration Ratings Standard: Air Movement and Control Association (AMCA) Certified Ratings Seals for air performance and water penetration ratings.
2. Air Performance & Water Penetration Data: A 4' x 4' unit provides 4.07 square feet of free area and shall intake 1,046 FPM free area velocity at a static pressure drop not exceeding 0.13" H2O per AMCA Standard 500-L.

F. Acoustic Performance: Tested in accordance with ASTM E 90 and E413.
1. Acoustic Ratings Data: Octave Band Center Frequency (Hz) - Free Field Noise Reduction in Decibels; 63 Hz-16 dB; 125 Hz- 13dB; 250 Hz-15dB; 500 Hz-18 dB; 1,000 Hz-16dB; 2,000 Hz-18dB; 4,000 Hz-18 dB; and 8,000 Hz-21dB

2.03 ALUMINUM FINISHES

A. Spray-Applied Hylar 5000™/Kynar 500®:
1. Color: Duranar™ Aged Copper UC54434, or equal. Final selection shall be made by Engineer from manufacturer's standard color list. The manufacturer's list shall consist of a minimum of 5 choices that closely match existing color.

2. Coating thickness: 4-coat 2.13-3.1 mils metallic.
3. Painted Finish Performance Standards:
   a. Impact:
      1) Test Method ASTM D2794.
      2) Coating shall withstand direct and reverse impact of 1.5 inch-pounds/mil substrate thickness.
      3) Coating shall adhere tightly to metal when subjected to #600 Scotch tape pick-off test. Slight micro-cracking is permissible, but no star cracking shall occur.
   b. Adhesion:
      1) Test Method ASTM D3359.
      2) Coating shall not pickoff when subjected to an 11 x 11 x 1/16-inch grid with reverse impact of 1.5 inch-pounds/mil substrate thickness and taped with #600 Scotch tape.
   c. Humidity Resistance:
      1) Test Method ASTM 2247.
      2) No formation of blisters shall occur when subjected to condensing water fog at 100°F for 1,000 hours.
   d. Salt Spray Resistance:
      1) Test Method ASTM B117; expose single-coat system to 1,000 hours, using 5% NaCL solution.
      2) Corrosion creepage from scribe line shall be 1/16 inch.
   e. Weather Exposure:
      1) Accelerated Test Method ASTM D822 for 2,000 hours in Weather-Ometer.
      2) No checking, crazing or adhesion loss shall occur.
   f. Chemical Resistance:
      1) Acid Pollutants Test Method ASTM D1308 for 10% muriatic acid and 20% sulfuric acid.
      2) Alkali Resistance Test Method ASTM D1308.
      3) No loss of adhesion or gloss and no color change shall occur.

2.04 LOUVER SCREENS

A. General: Provide exterior louvers with louver screens.
   1. Screen Location for Adjustable Louvers: Interior face, unless otherwise indicated.
   2. Screening Type: Insect screening, unless otherwise indicated.
   3. Where ductwork is attached to the interior side of louver provide holder for screen frame that can be built into ductwork and so arranged that by opening a door in duct, screen can be slid out for cleaning without disassembling ductwork. Where there is no ductwork attached to interior of louver, provide a holder for screen frame designed so that screen can be removed for cleaning and replaced without using tools.

B. Attachment: Secure screens to louver frames with stainless-steel machine screws, spaced 18 inches on center.
   1. Louver Screen Frames: As manufactured by The Airolite Co; to sizes indicated on Drawings.
   2. Fabrication: Mitered corners.
   3. Metal: Roll formed aluminum.
   4. Finish: Mill finish, unless otherwise indicated.

5. Type: Rewirable frames with a driven spline or insert for securing screen mesh.

C. Louver Screening for Aluminum Louvers: As manufactured by The Airolite Co.
1. Bird Screening: Aluminum, 1/4-inch, 0.047-inch wire.

2.05 BITUMINOUS PAINT

A. Bituminous Paint: Cold-applied asphalt mastic complying with SSPC-Paint 12 but containing no asbestos fibers, or cold-applied asphalt emulsion complying with ASTM D 1187.

PART 3 - EXECUTION

3.01 INSTALLATION

A. Protect all aluminum in contact with concrete, plaster, masonry, steel or galvanized metal with a coating of bituminous paint. Prepare substrates and openings using methods recommended by manufacturer for achieving best result for substrates under project conditions.

B. Install louvers as shown in the Contract Drawings and as shown in the SMACNA Architectural Sheet Metal manual.
1. Locate and place units level, plumb, and at indicated alignment with adjacent work.
2. Use concealed anchorages where possible. Provide brass or lead washers fitted to screws where required to protect metal surfaces and to make a weathertight connection.
3. Provide perimeter reveals and openings of uniform width for sealants and joint fillers as indicated on Drawings.
4. Repair finishes damaged by cutting, welding, soldering, and grinding. Restore finishes so no evidence remains of corrective work. Return items that cannot be refinished in the field to the factory, make required alterations, and refinish entire unit or provide new units.

C. Provide bird screens on all louvers. Install on the interior side. Use stainless steel screws throughout.

D. Install sill flashing as shown detailed and as required to provide a watertight installation.

E. Install sheet metal drip at head of louvers where shown.

F. Apply sealant "B" all around frame, inside and outside. Install concealed gaskets, flashings, joint fillers, and insulation, as installation progresses, where weathertight joints are required.

3.02 ADJUSTING, CLEANING AND PROTECTION

A. Test operation of adjustable louvers and adjust as needed to produce fully functioning units that comply with requirements.

B. Protect products from damage until completion of project. Use temporary protective coverings where needed and approved by manufacturer. Remove protective covering at the time of Substantial Completion.

END OF SECTION

THIS PAGE INTENTIONALLY LEFT BLANK

SECTION 10400

IDENTIFYING DEVICES

1.01 SUMMARY

A. Section Includes: Signs, decals, tags, and pipe markers.

1.02 REFERENCES

A. American National Standards Institute / American Society of Mechanical Engineers (ANSI/ASME), ASME A13.1 - 2015, "Scheme for the Identification of Piping Systems."

B. American National Standards Institute (ANSI), ICC A117.1 - 2009, "Accessible and Usable Buildings and Facilities".

C. National Fire Protection Association (NFPA) NFPA 704, "Standard System for the Identification of the Hazards of Materials for Emergency Response".

1.03 SUBMITTALS

A. Submit in accordance with City General Provisions.

B. Product Data: Fully describe all items proposed for use.

C. Shop Drawings: Scaled drawings or images of custom-made signs, showing style and size of lettering and colors.

D. Samples: Provide one full size representative sample of each signage type, made of the specified material, from Part 2 of this Specification. Provide manufacturer's standard color palette for each selection.

1.04 QUALITY ASSURANCE

A. Regulatory Requirements: Comply with the following:
   1. Americans with Disabilities Act (ADA).
   2. California Building Code, CCR Title 24, especially Chapter 11B.
   3. California Code of Regulations, CCR Title 8, CAL/OSHA.
   4. Federal Occupational Safety and Health Act (OSHA).
   5. Referenced sections, specifications for accident prevention signs and tags, and exit signs.
   6. Porcelain Enamel Institute (PEI): Complete Technical Manuals 101 through 1301 and Property Bulletin 503 – Resistance to Corrosion.

B. Comply with the manufacturer's published recommendation for installation of materials used.

PART 2 - PRODUCTS

2.01 SAFETY SIGNAGE

A. Hazard Alerting Signage (CAUTION, WARNING, DANGER):
   1. General
      a. Refer to the Signage Schedule below to identify the sign types and quantities for the project.

b. Manufacturer: Seton Nameplate Company; W.H. Brady Company; or equal.

Quantity	Text	Size
2	DANGER COMBUSTBLE LIQUID	14”W x 10”H
2	DANGER NO SMOKING	10”W x 7”H
1 (tank label)	DIESEL	24”W x 6H

2. Danger Signage Design:
   a. Size: as indicated in Schedule
   b. Material: 60-mil rigid plastic, coated for weather and vandalism protection
   c. Text, format, and color:
      1) Conforming to OSHA 1910.145(d), Specifications for Accident Prevention Sign Design.
      2) Text as scheduled below.
   d. Provide eyelet holes at each corner for mounting.
3. Tank Label Signage:
   a. Size: as indicated in Schedule
   b. Material: Vinyl with adhesive backing
   c. Text, format, and color:
      1) Text as indicated in schedule
      2) Color: white text on red background

B. Fire Equipment Location Signs:
   1. One-way Fire Equipment Location Signs:
      a. Manufacturer: Seton Nameplate Company; W.H. Brady Company; or equal.
      b. Size: 4-inch wide, 18-inch height (approximate size).
      c. Material: 60-mil rigid plastic, coated for weather and vandalism protection
      d. Text: Bright, fade-resistant red on white downward facing directional arrow on red field. Text is shown on schedule below.
      e. Schedule of signs required:

Text	Quantity		
	1-way	2-way	3-way
"FIRE EXTINGUISHER”	1	___	___

2.02 CHEMICAL HAZARD AND HAZMAT COMMUNICATION

A. Chemical Hazard and GHS Signs
   1. Pictogram Signs
      a. Provide signs in ‘diamond’ configuration, black pictogram symbol, red sign border with black trim on white background in conformance with OSHA 1910.1200 of the size and quantity noted in the Table, below. Seton L3500 series, or equal.

Sign Type (product number)	Symbol	Material	Quantity	
			12”x12”	6”x6”
FLAMMABLE (Seton L3506)		Adhesive Vinyl	2	--
HEALTH HAZARD (Seton L3511)		Adhesive Vinyl	2	--
CORROSIVE (Seton L3512)		Adhesive Vinyl	2	--
HARMFUL/IRRITANT (Seton L3509)		Adhesive Vinyl	2	--

2. NFPA Fire Hazards of Materials Signs (NFPA 704 Diamond Sign):
   a. Seton Nameplate Company; W.H. Brady Company; or equal.
   b. Sign characteristics: Four-color background, blue, red, yellow, white; diamond shape; 7-1/2 inches by 7-1/2 inches; 3-inch-high black hazard numerals scheduled below; conform to NFPA No. 704, Standard System for the Identification of the Hazards of Materials for Emergency Response.
   c. Material: Semi-rigid plastic with adhesive back.
   d. Where mounted to concrete or other porous materials provide 3/4-inch-thick AB Marine grade Douglas Fir plywood backing, sealed edges, and painted. Eyelet holes at corners for mounting.
   e. Schedule of signs required:

Quantity	Hazardous Material	Blue (Health)	Red (Fire)	Yellow (Reactivity)	White (Specific Hazard)
1	Diesel Fuel Oil	1	2	0	--
1	Battery Acid	3	0	1	--

PART 3 - EXECUTION

3.01 SIGN INSTALLATION

A. Install signs where directed by the Engineer.

B. Install signs after painting surfaces to receive signs. Follow manufacturer's written installation instructions.

C. Use fasteners as follows:
   1. To concrete and masonry materials: 4-1/4-inches diameter expansion anchors.
   2. To sheet metal (gauges 28 to 6) #10 sheet metal screws.
   3. To gypsum board: Adhesive backing tape.
   4. To chain link fencing: Wire ties at each corner.
   5. To plywood backing boards: #10 wood screws.
   6. To machinery: Fasteners as suitable.

END OF SECTION

SECTION 15050

PIPING, VALVES, AND ACCESSORIES

PART 1 - GENERAL

1.01 SUMMARY

A. Section Includes: Provide all piping, including fittings, valves, supports, and accessories as shown on the Drawings, described in the Specifications and as required to completely interconnect all equipment with piping for complete and operable systems, including equipment drains.

1.02 REFERENCES

A. ASTM International (ASTM)

B. American Society of Mechanical Engineers (ASME)

C. American National Standards Institute (ANSI)

D. American Water Works Association (AWWA)

E. American Welding Society (AWS)

F. U.S. Department of Transportation (DOT)

G. Manufacturers Standardization Society of the Valve and Fittings Industry (MSS)

1.03 SUBMITTALS

A. Shop Drawings:
   1. Verify by excavation, inspection and measurement all installation conditions, including existing utilities and structures, for all pipe before preparation of Shop Drawings. Submit field measurements and photos with Shop Drawings where exposed conditions are significantly different than indicated on the Drawings.
   2. Layouts and Schematics: Submit detailed installation drawings of all piping. Schematics may be submitted for piping 4 inches and smaller. The Drawings and schematics shall include: pipe support locations and types, fittings, valves, other appurtenances. (Product Review)
   3. Submit data to show that the following items conform to the Specification requirements:
      a. Pipe, fittings and accessories (Product Review).
      b. Pipe couplings and flexible pipe pieces (Product Review).
      c. Valves and Accessories (Product Review).
   4. Pipe, fittings and joint fabrication details for shop fabricated and field-welded pipe (Product Review).
   5. Submit procedures for welding shop-fabricated and field-welded joints and welder qualifications (Product Review).
   6. Submit samples of gaskets and other materials where required by the detailed specifications.

7. Submit certified test reports as required herein and by the referenced standard specifications (Product Information).
8. CitySamples: Solder and flux for copper pipe.
9. Submit leak and pressure testing plan in accordance with the requirements in 3.09.
10. Submit shop drawings for leak and pressure testing apparatus including, but not limited to, temporary bulkheads necessary for testing of new pipelines.

B. Affidavits: Furnish affidavits from the manufacturers for the following equipment:
   1. Valves.

C. Field test reports as required in Part 3.

1.04 DELIVERY, HANDLING AND STORAGE

A. Exercise great care to prevent injury to or scoring of the pipe, as applicable, during handling, transportation or storage. Do not store pipe on rough ground and do not roll, drag, or otherwise handle the pipe in a manner damaging to the coating.

B. All materials delivered to the job site shall be new, free from defects, and marked to identify the material, class, and other appropriate data such as thickness for piping.

C. Store pipe so that it's off the ground, adequately supported on suitable supports such as wooden sleepers, rubber tires or sandbags and securely blocked. Avoid compression damage or deformation to the ends.

D. Where possible, store pipe in unit packages provided by the Pipe Manufacturer.

E. Stack pipe in accordance with the Pipe Manufacturer's recommendations.

F. Do not roll, drag, or drop pipe.

G. Store gaskets in a cool, dark place, out of direct sunlight, preferably in original cartons.

H. Damaged pipe, lining, and coatings shall be repaired or replaced at the expense of the Contractor to the City's satisfaction.

1.05 QUALITY ASSURANCE

A. Materials and equipment under this Section shall be furnished by manufacturers regularly engaged in the design and manufacture of the materials and equipment for a period of at least 5 years.

B. Pipe installed under this contract may be inspected for compliance by the Engineer, City and/or an independent testing laboratory selected by the City.
   1. Pipe rejected by the Engineer or City shall be immediately removed from the job site.

C. Acceptance of materials shall be subject to strength and quality testing in addition to inspection of the completed product. Acceptance of installed piping systems shall be based on inspection and leakage tests as specified hereinafter.

D. Factory Quality Control: The Contractor shall test all products as required herein and by the reference specifications.

E. Field Quality Control:
   1. The City will:
      a. Inspect pipe fabrication and witness any test
   2. The Contractor shall:
      a. Perform leakage tests
      b. Be responsible for the costs of additional inspection and retesting by the City resulting from noncompliance.

1.06 SHUTDOWN OF EXISTING UTILITIES, SERVICES OR OPERATIONS

A. Refer to City General Provisions.

1.07 POTHOLING

A. Do not prepare shop drawings, order, or design any piping until potholing has been completed and a potholing report has been favorably reviewed in accordance with City General Provisions.

1.08 PIPING SYSTEMS

PART 2 - PRODUCTS

2.01 GENERAL

A. Pipe and valve sizes are nominal inside diameter unless otherwise noted.

B. All materials delivered to the job site shall be new, free from defects, and marked to identify the material, class, and other appropriate data such as thickness for piping.

C. Acceptance of materials shall be subject to strength and quality testing in addition to inspection of the completed product. Acceptance of installed piping systems shall be based on inspection and leakage tests as specified hereinafter.

D. Cutoff Flanges: Provide at all pipe or sleeve penetrations where cast into wall for pipes 4 inches and greater in nominal diameter, and at all penetrations of 3-inch and smaller nominal diameter pipe in wet or potentially wet locations as indicated on the Drawings. Cutoff flange shall be at least ¼ inch thick and shall be continuously welded onto the pipe.

2.02 GENERAL MATERIAL REQUIREMENTS

A. Bolts and Tie Rods: Unless specified otherwise herein, flange bolts and nuts, coupling bolts and nuts, tie rods, and other hardware shall be as follows:
   1. Exposed: Carbon and Alloy Steel Nuts per ASTM A193, Grade B7.
   2. Where bolts and tie rods are installed within a corrosive environment, such bolts and tie rods shall be Type 316 stainless steel per ASTM A193, Grade B8M, Class 2. The number and diameter of stainless steel tie rods shall be upsized to accommodate equivalent load ratings stated in AWWA M11. Apply an anti-galling compound to the threads of stainless steel bolts and tie rods.

B. All materials in contact with potable water shall comply with the Safe Drinking Water Act and NSF requirements for use in water systems.

2.03 PIPING MATERIALS

A. Pipe and Fitting Designation: Piping materials are identified by a "Type" designation in these Specifications. The "Type" designation identifies not only the pipe itself but the associated fittings and appurtenances and the installation and test procedures described for that "Type." The designation of a particular type shall indicate a complete installation including fittings, joints, cleaning and testing. The pipe and fitting materials for each type designation shall be as specified herein and summarized in the Pipe Type Schedule.

B. Pipe Type Schedule: Pipe material, joints, and fittings shall be as summarized below. A detailed specification of each pipe type follows. The detailed specification supersedes the schedule in case of any conflicts.

Pipe Type	Pipe Description	Field Joints	Fittings
CUP	Copper	Solder or Flare	Wrought Copper or Bronze

C. CUP Pipe:
1. Pipe: Copper, ASTM B88.
   a. Buried: Type K (soft drawn).
   b. Exposed: Type L (hard drawn).
2. Joints:
   a. Buried: Soldered or flared.
   b. Exposed: Soldered.
3. Solder: ASTM B32, Alloy Grade SN 94, SN 95 or SN 96. Solder and flux shall contain less than 0.2% lead.
4. Fittings:
   a. Soldered: Wrought copper, ASTM B75 for materials and ANSI B16.22 for dimensions; or cast bronze, ASTM B62 for materials and ANSI B16.18 for dimensions.
   b. Flared: AWWA C800 and ANSI B16.26.

2.04 VALVES AND ACCESSORIES

A. General Requirements for Valves:
1. All valves of each type shall be the product of one manufacturer.
2. All exposed valves shall be furnished with operators, handwheels, levers, or other suitable type wrench including handles as specified herein or as shown on the Drawings.
3. All threaded stem valves shall open by turning the valve stem counter-clockwise.
4. All exposed valves and valve operators shall have a non-bleeding shop coat, unless otherwise specified.

PART 3 - EXECUTION

3.01 PIPING INSTALLATION

A. General Handling and Placing:
   1. Carefully inspect each pipe, fitting, valve and accessory before installation to insure there is no defective workmanship or obstructions. Inspect the interior and exterior protective coatings and patch all damaged areas in the field or replace to the satisfaction of the Engineer.
   2. Place or erect all piping to accurate line and grade and backfill, support, hang, or brace against movement as specified or shown on the Drawings, or as required for proper installation. Remove all dirt and foreign matter from the pipe interior prior to installation and thoroughly clean all joints before joining.
   3. Use reducing fittings where any change in pipe size occurs. Do not use bushings unless specifically noted on the Drawings. Use eccentric reducing fittings wherever necessary to provide free drainage of lines.
   4. Prevent damage to the pipe, lining and coating during handling and placement.
   5. Remove all dirt and foreign matter from the pipe interior prior to installation and thoroughly clean all joints before joining.

B. General Exposed Piping Installation:
   1. Unless shown otherwise, install piping parallel to building lines, plumb and level.
   2. Install piping without springing or forcing the pipe in a manner that would set up stresses in the pipe, valves, or connected equipment.
   3. Set all pipe flanges level, plumb, and aligned. All flanged fittings shall be true and perpendicular to the axis of the pipe. All bolt holes in flanges shall straddle vertical centerline of pipes.

C. Pipe Welding:
   1. General: Unless specified otherwise, shop and field welding of pipe shall conform to ANSI B31.3 as amended by this paragraph.
   2. All field and shop welding shall be done by the electric arc process unless otherwise specified. All field welding shall be done in passes not thicker than ¼-inch. Size and type of electrodes, and current and voltages used, shall be subject to the favorable review of the Engineer. Give particular attention to the alignment of edges to be joined, so that complete fusion and penetration will be effected throughout the bottom of the weld. Welds shall contain no valleys or undercuts in the center or edges of the weld. Thoroughly clean each pass, except the final one, of dirt, slag, and flux before the succeeding bead is applied.
   3. Clean completed field welds of pipe joints of dirt, slag and flux, and then visually inspect. Completely chip out all defects in welds discovered during field inspection in a manner that will permit proper and complete repair by welding subject to the favorable review of the Engineer. Under no circumstances will caulking of defective welds be permitted.
   4. All welding shall be done by experienced, skilled operators familiar with the methods and materials to be used. Hand welding will be done only by welders qualified under the standard qualification procedure of Section IX of the ASME Boiler and Pressure Vessel Code.

5. Field welds shall follow as closely as possible to the laying operation. All field welds shall be complete before lining or coating of the joints in steel pipe is begun. Where pipe is fusion epoxy lined and/or coated, follow AWWA C-213 procedures for field welded joints.
6. A single, continuous, watertight, full fillet weld shall be the minimum required at all field joints. Double welded joints are required on all piping specifically noted to be double welded.
7. See also installation specifics for welding of pipe.

D. Installation Specifics:
1. CUP Pipe:
   a. Bends shall be made in a manner that does not crimp or flatten pipe.
   b. Dielectric unions shall be installed at connections with ferrous piping.
   c. Pipe shall have joints squarely cut clean, soldered joints shall be properly fluxed and heated before solder is placed in the joint. Joints must be driven up tight before solder is added. Compression and flared joints shall be made up in accordance with the fitting manufacturer's installation instructions. Brazing shall be in accordance with ANSI B31.3.
   d. Install piping tight to slabs, beams, joists, columns, walls, and other permanent elements of the building. Provide space to permit insulation applications, with 1-inch clearance outside the insulation. Allow sufficient space above removable ceiling panels to allow for panel removal.
   e. Install drains at low points in mains, risers, and branch lines consisting of a tee fitting, ¾-inch ball valve, and short ¾-inch threaded nipple and cap.
   f. Exterior Wall Penetrations: Seal pipe penetrations through exterior walls using steel sleeves and mechanical sleeve seals.
   g. Fire Barrier Penetrations: Where pipes pass through fire rated walls, partitions, ceilings, and floors, maintain the fire rated integrity.
   h. Install branch connections to mains using tee fittings in main with take-off out the bottom of the main, except for up-feed risers, which shall have take-off out the top of the main line.
   i. Install strainers on the supply side of each control valve, pressure reducing valve, pressure regulating valve, solenoid vale, inline pump, and elsewhere as indicated. Install nipple and ball valve in blowdown connection of strainers 2 inches and larger.

3.02 INSTALLATION OF VALVES AND ACCESSORIES

A. Install valves and accessories such that all parts are easily accessible for maintenance and operation.

B. Connections between ferrous and non-ferrous piping, valves, accessories or pipe supports shall be made using a dielectric coupling, union, or flange.

3.03 PIPE AND VALVE IDENTIFICATION

A. Exposed Pipe Identification: Before painting, banding and labeling, pipes shall be identified by the Contractor with temporary wired-on cardboard tags showing the proposed marking for review by the Engineer.

3.04 FIELD QUALITY CONTROL

A. The City will:
   1. Inspect field welds and test the welds if it is deemed necessary.
   2. Perform bacteriological analysis for pipeline to be disinfected.

B. Factory Quality Control: The Contractor shall test all products as required herein and by the reference specifications.

C. The Contractor shall:
   1. Perform leakage tests.
   2. Be responsible for the costs of additional inspection and retesting by the City resulting from non-compliance.

3.05 CLEANING

A. Prior to testing, thoroughly clean the inside of each completed piping system of all dirt, loose scale, sand and other foreign material. Cleaning shall be by sweeping, flushing with water or blowing with compressed air, as appropriate for the size and type of pipe. Flushing shall achieve a velocity of at least 3 feet per second. The Contractor shall install temporary strainers, temporarily disconnect equipment, or take other appropriate measures to protect equipment while cleaning piping. Cleaning shall be completed after any pipeline repairs.

3.06 FIELD TESTING

A. General: Perform leakage tests on all pipe installed in this project. Furnish all equipment, material, personnel and supplies to perform the tests and make all taps and other necessary temporary connections. The test pressure, allowable leakage and test medium shall be as specified and as shown in the following Paragraphs. Test pressure shall be measured at the highest point on the line, except that pressure at lowest point shall not exceed pipe manufacturer's rated test pressure, unless specifically noted otherwise. Leakage tests shall be performed on all piping at a time agreed upon and in the presence of the Engineer. All visible leaks shall be repaired, regardless of the test results. The Contractor may purchase water for construction, cleaning, testing, and disinfection of the pipelines from the City at a fire hydrants designated by the City. At any connection to the City water system, the Contractor shall provide an air-gap or reduced pressure backflow valve system to prevent backflow into the water source.

B. Buried Piping: The leakage test for buried piping shall be made after all pipes are installed and backfilled. However, the Contractor may conduct preliminary tests prior to backfill. If the Contractor elects to conduct preliminary tests, provide any necessary temporary thrust restraint.

C. Exposed Piping: All supports, anchors and blocks shall be installed prior to the leakage test. No temporary supports or blocking shall be installed for final test.

D. Accessories: It shall be the responsibility of the Contractor to block off or remove valves, gauges, etc., which are not designed to withstand the full test pressure.

E. Testing Apparatus: Provide pipe taps, nozzles and connections as necessary in piping to permit testing including valves to isolate the new system, addition of test media, and draining lines and disposal of water, as is necessary. These openings shall be plugged in a manner favorably reviewed by the Engineer after use. Provide all required temporary bulkheads.

F. Pneumatic Testing: Piping tested by air or another gas shall show no reduction of pressure during the test period after corrections have been made for changes in temperature in conformance with the following relationship:

$$\frac{P_1}{T_1} = \frac{P_2}{T_2}$$

Where T_1 and T_2 are the absolute temperatures of the gas in the pipe and P1 and P2 are the absolute pressures. The subscript "1" denotes the starting conditions and the subscript "2" denotes the final conditions.

G. Precautions for Pneumatic Testing: Where air or another gas is called for as the test medium, the Contractor shall take special precautions to protect personnel. During the initial pressurization of a pipeline to the specified test pressure, personnel shall be protected by suitable barricades or shall remove themselves to locations where portions of the concrete structure itself are between them and the pipeline under test.

H. Correction of Defects: If leakage exceeds the allowable, the installation shall be repaired or replaced and leakage tests shall be repeated as necessary until conformance to the leakage test requirements specified herein have been fulfilled. All visible leaks shall be repaired even if the pipeline passes the allowable leakage test.

I. Reports: The Contractor shall keep records of each piping test, including:
   1. Description and identification of piping tested.
   2. Test pressure.
   3. Date of test.
   4. Witnessing by Contractor and Engineer.
   5. Test evaluation.
   6. Remarks, to include such items as:
      a. Leaks (type, location).
      b. Repairs made on leaks.
   7. Test reports shall be submitted to the Engineer.

J. Venting: Where not shown on the Drawings, the Contractor may install valved "tees" at high points on piping to permit venting of air. Valves shall be capped after testing is completed.

K. Testing Specifics: Piping shall be tested as indicated in the Pipe Schedule shown on the Drawings. Unless specified otherwise, test each system for 4 hours.

3.07 DISINFECTION OF POTABLE WATER SYSTEMS

A. See Specification 02516.

END OF SECTION

THIS PAGE INTENTIONALLY BLANK

SECTION 15800

HEATING, VENTILATING AND AIR CONDITIONING AIR DISTRIBUTION

PART 1 - GENERAL

1.01 SUMMARY

A. Section Includes:
   1. Furnish all labor, materials, equipment, services and incidentals required to provide complete, integrated, and operating Heating, Ventilating and Air Conditioning Air Distribution Systems for the buildings and structures in the project. Materials and equipment to be supplied shall be new, of the best quality as specified and as shown on the Drawings.
   2. Work Included in This Section:
      a. Ductwork and accessories and duct silencers
      b. Mechanical insulation.
      c. Fans.
      d. Vibration control.
      e. Testing, adjusting, and balancing.

B. Fans, exhausters and ventilators furnished as a part of the work of this project shall comply with applicable provisions of this Section, and Schedules and Notes on Drawings.

C. All motorized equipment shall be provided with vibration control. Vibration control products furnished as integral part of facility fabricated equipment are specified as part of equipment assembly in other Division 15 sections. Types of vibration control products specified in this Section include the following:
   1. Neoprene pads.
   2. Vibration isolation springs.
   3. Spring isolators, freestanding.
   4. Flexible duct connectors.

D. Correction of Conflicts: When ductwork configurations, size, or location conflicts with other work (piping, electrical, structural, ceiling heights or doors) due to failure to coordinate duct layout with respective items, rework of other work and/or rework of ductwork to eliminate conflicts shall be provided as a part of the work of this Section, without additional cost.

E. Following definitions apply to terms as used in this Section:
   1. Seams: Joining of two longitudinally (in direction of airflow) oriented edges of duct surface material occurring between two joints. All other duct surface connections made on perimeter are deemed to be joints.
   2. Joints: Girth intersections of duct surface material; branch and subbranch intersections; tap-ins (duct collar, etc.)' fitting subsections; louver and air terminal connections to ducts; access door/panel frames and jambs; duct, plenum, and casing abutments to building structure.

F. System Performance Requirements: Duct system design, as indicated, has been used to select and size air moving and distribution equipment and other components of air systems. Changes or alterations to layout or configuration of duct systems must be specifically approved by Engineer, in writing. Accompany

requests for layout modifications with calculations showing that proposed layout will provide original design results without increasing system total pressure.

G. Application and installation provisions for ductwork hangers and supports are included in Part 3 of this Section. Duct hangers and supports are not normally shown on Drawings. However, appropriate hangers and supports shall be provided at proper intervals in compliance with provisions of this Section, with SMACNA standards and applicable code requirements.

H. Except as otherwise indicated, obtain vibration control products from single manufacturer. Engage manufacturer to provide technical supervision of installation of vibration control products.

I. Provide Project Record Documents:
   1. Actual locations of ducts and duct fittings showing any additional fittings used.
   2. Actual location of each assembly or accessory.
   3. As-built HVAC drawings representing actual locations of ducts, fittings, and equipment.

1.02 REFERENCES

A. Standards and document references in text of this Section shall be the edition current at date project manual was issued.
   1. AFBMA (Anti-Friction Bearing Manufacturers Association):
      a. AFBMA Std 9 Load Ratings and Fatigue Life for Ball Bearings
      b. AFBMA Std 11 Load Ratings and Fatigue Life for Roller Bearings
   2. AMCA (Air Movement and Control Association, Inc.)
      a. AMCA 99 Standards Handbook
      b. AMCA 210 Laboratory Methods of Testing Fans for Rating Purposes
      c. AMCA 300 Test Code for Sound Rating Air Moving Devices
      d. AMCA 301 Method of Calculating Fan Sound Ratings from Laboratory Test Data
   3. NEMA (National Electrical Manufacturers Association):
      a. NEMA MG-1 Motors and Generators
   4. American Society of Heating, Refrigeration and Air-Conditioning Engineers (ASHRAE):
      a. ASHRAE Handbook Equipment, CH Duct Construction
      b. ASHRAE Handbook Fundamentals, CH Duct Design
   5. American Society for Testing and Materials (ASTM):
      a. ASTM A36 Standard Specification for Carbon Structural Steel
      b. ASTM A90 Standard Test Method for Weight of Coating on Iron and Steel Articles with Zinc or Zinc-Alloy Coatings
      c. ASTM A653 Standard Specification for Steel Sheet, Zinc-Coated (Galvanized) or Zinc-Iron Alloy- Coated (Galvanized) by the Hot-Dip Process
      d. ASTM A924 Standard Specification for General Requirements for Steel Sheet, Metallic-Coated by the Hot-Dip Process
      e. ASTM E84 Standard Test Method for Surface Burning Characteristics of Building Materials.
   6. National Fire Protection Association (NFPA)
      a. NFPA 70 National Electrical Code (NEC)
   7. Sheet Metal and Air Conditioning Contractors National Association (SMACNA):

a. SMACNA, HVAC Air Duct Leakage Test Manual
b. SMACNA, HVAC Duct Construction Standards, Metal and Flexible
c. Seismic Restraint Manual: Guidelines for Mechanical Systems

8. Underwriters Laboratories, Inc. (UL):
   a. UL 181, Standard for Safety, Factory-Made Air Ducts and Connectors
9. California Building Code (CBC)
10. California Mechanical Code (CMC)

1.03 SYSTEM DESCRIPTION

A. Single Source Responsibility: In general, all fans, exhausters, and ventilators shall be the products of a single manufacturer. All units of each particular type shall be the products of a single manufacturer.
   1. Fabrication: Conform to AMCA 99.
   2. Performance Ratings: Based on tests made in conformance with AMCA 210.
   3. Sound Ratings: Determined by AMCA 301, tested per AMCA 300.
   4. NEMA Compliance: Provide electric motors and components that are NEMA listed and labeled.
   5. Performance and Sound Rating Certification: Manufacturers shall certify that their products comply with specified requirements.

1.04 SUBMITTALS

A. Provide shop drawings and technical literature covering all equipment and accessories being furnished under this Section. The data shall include information to demonstrate compliance with all of the requirements of these Specifications. Submittals shall include but not be limited to the following:
   1. Manufacturer's drawings detailing equipment assemblies and indicating dimensions, weights, required clearances, components, and location of field connections.
   2. Fan curves for proposed units, with system operating conditions clearly indicated.
   3. Sound power ratings for both fan inlet and outlet at rated capacity.
   4. Manufacturer's installation and maintenance instructions.
   5. Complete operation and maintenance (O&M) manuals shall be in accordance with the requirements of Section 01700. It shall be the responsibility of the Contractor to correct deficiencies and provide an overall system manual. Manuals shall consist of a set of documents containing, but not limited to, the following:
      a. A detailed description, both physical and functional, of all devices, including equipment operation.
      b. Preventive maintenance instructions.
      c. Preventive maintenance shall include instructions for lubrication, motor and drive replacement, spare parts list, schematics, logic, and timing diagrams and wiring diagrams.
      d. Corrective maintenance instructions including diagnostic exercises, troubleshooting guides, repair procedures, removal and replacement, and assembly and disassembly instructions. Include drawings of block diagrams, schematics, wiring diagrams, logic and timing diagrams.
      e. A complete parts list, cross-references, if necessary, to standard component numbers.
   6. Motor ratings and electrical characteristics, plus motor and fan accessories.
   7. Manufacturer's product certification, where applicable.

8. Submit product data for insulation, jackets, coverings, adhesives, sealants, cements and other materials being installed on this project. List materials and thickness for each service application.
   a. Provide shop and installation drawings of field fabricated covers.
   b. Submit samples of products, if requested.
9. Submit product descriptive data for flexible connection materials, sealing materials, access door, duct liner, flexible ducting and factory-fabricated devices.

B. Manuals: Furnish manufacturer's installation, lubrication and maintenance manuals, bulletins and parts lists. Furnish separate list of recommended spare parts, motor and drive replacement part numbers, service depot location and telephone number.

C. Affidavits: Furnish affidavits from the manufacturers stating that the equipment has been properly installed and tested and each is ready for full time operation.

D. One copy of all submittals and construction documents shall be maintained on the construction site.

1.05 QUALITY ASSURANCE

A. Codes: Comply with all rules and regulations of authorities having jurisdiction over the work specified herein.

B. Permits and inspection shall be in accordance with Division 1 of these Specifications.

C. All equipment furnished under this Section shall: (1) be of a design and manufacturer who has been regularly engaged in the design and manufacture of the equipment for a minimum of 3 years; and (2) be demonstrated to the satisfaction of the Engineer that the quality is equal to equipment made by those manufacturers specifically named herein.

D. The Installer shall be a company specializing in performing the work of this Section with a minimum of 3 years of documented experience.

E. The Drawings shall be taken in a sense as diagrammatic. Size of ducts and pipes including general method of running them are shown, but it is not intended to show every offset and fitting nor every structural difficulty that may be encountered.

F. Ductwork construction and air system performance shall be in accordance with:
   1. CMC.
   2. ASHRAE Handbook Equipment, Chapter 1.
   3. ASHRAE Handbook Fundamentals, Chapter 32.
   4. SMACNA HVAC Duct Construction Standards, Metal, and Flexible.

G. Provide hangers and support in accordance with SMACNA HVAC Duct Construction Standards:
   1. Hangers and support devices shall be designed, suitable, and appropriate for respective application, installed in compliance with product manufacturer’s recommendations.
   2. Comply with guidelines for SMACNA seismic restraint manual requirements.

H. Insulation:
   1. Applicator: A company specializing in, and experienced in, mechanical equipment and system insulation application.

2. Fire performance characteristics: Insulation, facings, cements, and adhesives shall have 25/50 maximum flame spread/smoke developed rating in accordance with ASTM E84, except insulation outside may be rated 75/150 maximum. Insulation shall be tested by and bear label of U.L. or other testing organization acceptable to authority having jurisdiction.

I. Design and Performance Requirements:
1. Design Criteria: Drawings indicate sizes, profiles, connections, and dimensional requirements of fans, exhausters, and ventilators, based on referenced products. Products having equivalent performance characteristics by other manufacturers may be considered, provided deviations in dimensions, profiles and efficiencies are suitable for the application and do not change the design concept access, service requirements, or intended performance as judged by the Engineer.
2. Furnished Fans: Capable of accommodating static pressure variations of plus or minus 10% shall have performance that does not vary from specified criteria more than the following:
   a. Not have decreased motor size, or increased noise level.
   b. Not have tip speed increased by more than 20%.
   c. Not have inlet air velocity increased by more than 20%.
3. Type, Size, Performance, Characteristics, Arrangement, Accessories: As scheduled or noted on Drawings for respective application; acceptable equivalent to products referenced on Drawings.
4. Fans and Shafts: Statically and dynamically balanced and designed for continuous operation at maximum rated fan speed and motor horsepower.
5. Motors: Comply with applicable general provisions of Section 16050:
   a. Designed for continuous operation in 40°C environment.
   b. For temperature rise in accordance with NEMA MG-1 limits for insulation class, service factor, and motor enclosure type.
   c. Type specified, scheduled or noted for respective units.
   d. Open drip proof type, except where specifically specified or noted otherwise for respective fans.
6. Provide ductwork and equipment supports, hangers, guides and anchors as on the Drawings, and as specified herein. When standard hangers, supports, and accessories are not adequate the Contractor shall employ a California registered Structural Engineer to prepare design calculations for all such supports, hangers and accessories for seismic restraint needed for the ductwork and equipment installation. Calculations and shop drawings shall be signed by the above named engineer and submitted to the Engineer.
9. Disconnect Switch: Nonfusible type, with thermal overload protection, unless indicated otherwise for a particular unit.

1.06 SEISMIC PROTECTION

A. Equipment specified in this Section is classified as essential for seismic protection. See Section 01190 for seismic requirements.

B. Seismic Restraints: All ductwork and piping shall be provided with seismic restraint in accordance with Seismic Hazard Level (SHL) “A” of the Seismic Restraint Manual: Guideline For Mechanical Systems, as published by SMACNA and in accordance with Section 01190.

1.07 DELIVERY, STORAGE AND HANDLING

A. The Contractor shall make his own provisions for properly storing and protecting all material and equipment against theft, injury, or damage from any and all causes. Damaged material and equipment shall not be used in the work.

B. Protect motors, shafts, and bearings from weather and construction dust.

C. If units must be stored outside for a prolonged period, remove motors and belts and store them inside a weathertight structure.

D. Deliver sealants used for ductwork in original unopened containers, clearly labeled with product description and identification. Labeling shall include expiration date for use, pot life, curing time, and mixing instructions when applicable. Store and handle per manufacturer's instructions.

PART 2 - PRODUCTS

2.01 GENERAL

A. Similar to items of equipment specified herein shall be the end product of one manufacturer.

B. Specific information relative to the various equipment, including identification numbers, capacities, horsepower, and other information shall be as listed on the Drawings.

C. All rooftop unit supply and return ductwork shall be acoustically lined.

2.02 DUCTWORK AND ACCESSORIES

A. Ductwork: Unless otherwise indicated, ductwork shall be galvanized steel.
   1. Ductwork shall be of lock forming quality, ASTM A653 and ASTM A924, coating designation G90. Zinc coating in accordance with ASTM A90. Provide mill phosphatized finish for exposed surfaces of ducts exposed to view.
      a. Carbon steel sheets: ASTM A366, cold-rolled sheets, commercial quality, oiled exposed matte finish.
      b. Reinforcements shapes and plates: Unless indicated otherwise, galvanized steel where installed on galvanized sheet metal duct. Where installed on duct of other material, shapes and plates shall be of compatible materials.
      c. Other sheet metal materials: Included in this Section.
   2. Rectangular duct fabrication:
      a. General: Except as indicated otherwise, fabricate rectangular ducts of galvanized sheet steel in accordance with SMACNA "HVAC Duct Construction Standards," Tables 1-3 through 1-19, including associated details. Conform to requirements of referenced standard for metal thickness, reinforcing types and intervals, tie rod applications, and joint types and intervals.
      b. Materials: Free from visual imperfections such as roller marks, seam marks, pitting, stains, and discolorations.
      c. Size ductwork as indicated on Drawings, coordinate with structure and other installations.

1) Lined ductwork: Dimensions indicated on lined ducts are nominal inside dimensions. Lined ductwork shall be fabricated approximately 2 inches larger in each direction than sizes indicated on Drawings.

d. Duct lengths: Appropriate to reinforcement and rigidity class required for pressure classification.

e. Static pressure classifications: Except where indicated otherwise, construct duct systems to following pressure classifications:
   1) Supply ducts: *3* inches water gauge.
   2) Return ducts: 2 inches water gauge, negative pressure.
   3) Exhaust ducts: 2 inches water gauge, negative pressure.

f. Crossbreaking or cross beading: Crossbreak or bead duct sides as indicated in SMACNA "HVAC Duct Construction Standard," Figure 1-4, on following ducts, unless they are lined or externally insulated:
   1) 20 gauge or less duct sides, 19 inches and larger with more than 10 square feet of unbraced panel area.

g. Low pressure ductwork joints:
   1) Transverse stiffeners and joints shall be appropriately spaced to maintain duct cross-section integrity in accordance with the pressure class specified and at the prevailing operating velocities.
   2) After joints are crimped, they shall be further secured by bottom punching or riveting. Longitudinal seams shall be Pittsburgh locked, and shall be cross-broken outward. Intake or exhaust side ducts shall be cross-broken inward. Discharge ducts shall be cross-broken outward. All plenums and casings shall be similarly cross-broken and further reinforced with 1-inch by 1-inch by 0.125-inch angles, running diagonally between joints, riveted to the casings.
   3) Girth joints shall be secured with "S" clips and drive cleats.
      a) Stiffen girth joints on ducts with any dimension larger than 15 inches to prevent bulging or sagging.
      b) "Ductmate" connector flanges are acceptable and, when used, all duct sealing tests as required by this specification shall hold with no variation.

h. Low pressure duct construction:
   1) Increase duct sizes gradually, not exceeding 15 degrees divergence wherever possible. Divergence upstream of equipment shall not exceed 30 degrees, convergence downstream shall not exceed 45 degrees.
   2) Ductwork fabrication:
      a) All ductwork shall be constructed, erected, and tested in accordance with the most restrictive of local regulations, procedures detailed in the ASHRAE Handbook of Fundamentals, or the applicable SMACNA standards. Provide duct material, gages, reinforcing, and sealing for operating pressure indicated.
      b) Joints shall be sealed, as required, to limit total system leakage to a maximum of 3-1/2% of the specified equipment airflows.
      c) All connections to main ducts shall be made with low loss fittings.

d) Decrease in duct size shall be made by a uniformly tapering section. The change in direction of the tapering section shall not be more than 1 inch for every 5-inches of run, unless otherwise specified.

e) Tee's, bends, and elbows shall be constructed with radius of not less than one times width of duct on centerline. Where not possible and where rectangular elbows are used, turning vanes shall be provided, unless otherwise indicated on drawings.

i. The Contractor shall provide all ductwork, plenums, and auxiliary work and products necessary to make the HVAC systems complete and ready for operation. Ductwork shall comply with the following restrictions and conditions:

1) Snap lock seams will not be permitted.

2) Where space conditions permit, full radius turns shall be used at offsets.

3) Visible duct deflection, loss of shape, or unwarranted noise or vibration resulting from faulty or inadequate support, reinforcing, metal gauge, fabrication, or joint spacing shall not be permitted.

4) Joints shall not interfere with airflow in the ducts.

5) Ducts over 17 inches in largest dimension shall be cross-broken or beaded on all four sides. Sway rods, 0.375-inch diameter, shall be installed at each transverse joint in ducts over 72-inches. The spacing between rods or the rods on the side of ducts shall not exceed 48 inches.

3. Rectangular duct fittings: Fabricate fittings (elbows, transitions, offsets, branch connections) and other duct construction in accordance with SMACNA “HVAC Duct Construction Standard,” Figures 2-1 through 2-10.

B. Sealing Materials:

1. Sealant shall be non-hardening, water resistant, fire resistant, compatible with mating material; liquid used alone or with tape, or heavy mastic, meeting the fire hazard classification rating of 25/50 when tested in accordance with ASTM E84.

2. Duct Sealer: Miracle #D-618, United McGill “UNI-WELD,” United Sheet Metal “Duct-Sealer.”

3. Flanged joint mastics: One-part, acid-curing, silicone elastomeric joint sealants; ASTM C 920, Type S, Grade NS, Class 25, Use O.

C. Duct Supports: Duct support details and spacing shall conform to the most current edition of the SMACNA “HVAC Duct Constructions Standard, Metal and Flexible,” Figures 5 1 to 5 7 of SMACNA Low Pressure Duct Standards. .

D. Duct Liner:

1. General: Comply with NFPA Standard 90A and B and TIMA Standard AHC 101.

2. Liner shall be like Knauf Duct Liner E-M; or equal.

3. Liner materials: ASTM C 1071, Type I; 1-inch thick, 1-1/2 pound density; 0.25 or better K-Factor, at 75°F mean temperature. Have surface exposed to air stream coated to prevent erosion of glass fibers at air velocity up to 3000 FPM; coat air surface with acrylic coating treated with EPA registered anti-microbial agent proven to resist microbial growth as determined by ASTM

G21 and G22. Flame spread rating not over 25, smoke developed rating not over 50 (ASTM C411).
    a. When ductwork is installed outdoors, liner thickness shall be 2 inches.
4. Liner adhesive: Comply with NFPA Standard 90A and ASTM C916.
5. Mechanical fasteners: Galvanized steel, suitable for adhesive attachment, mechanical attachment, or welding to duct, shall not damage liner when applied as recommended by manufacturer, cause leakage in duct, indefinitely sustain a 50-pound tensile dead load test perpendicular to duct wall; have pin length as required for insulation thickness without projecting more than 1/8-inch into air stream.
    a. Fastener adhesive: Comply with duct liner fire hazard classification.
6. Duct dimensions shown shall be net inside clear after lining.
7. Adhere a single layer of indicated thickness of duct liner with 90% coverage of adhesive at liner contact surface area. Multiple layers of insulation to achieve indicated thickness are prohibited.
8. Apply a coat of adhesive to liner facing in direction of airflow not receiving metal nosing.
9. Butt transverse joints without gaps and coat joints with adhesive.
10. Fold and compress liner in corners of rectangular ducts or cut and fit to assure butted edge overlapping.
11. Longitudinal joints shall not occur, except at corners of ducts, unless duct size and standard liner product dimensions make longitudinal joints necessary. Apply an adhesive coating to longitudinal seams in ducts exceeding 2,500 FPM air velocity.
12. Secure liner with mechanical fasteners, 4 inches from corners and at intervals not exceeding 12 inches transversely around perimeter; 3 inches from transverse joints and at intervals not exceeding 18 inches longitudinally.
13. Secure transversely oriented liner edges facing airstream with metal nosing of either channel or “Z” profile or integrally formed from duct wall, at following locations.
    a. Fan discharge.
    b. Intervals of lined duct preceding unlined duct.
    c. Upstream edges of transverse joints in ducts with velocities over 2,500 FPM.

E. Flat Oval Duct Fabrication:
1. General: “Basic Round Diameter” as used in this article is the diameter of the size of round duct that has a circumference equal to perimeter of a given size of flat oval duct. Except where interrupted by fittings, provide round and flat oval ducts in lengths not less than 12 feet.
    a. Acceptable manufacturers: Semco; LaPine; Tangent Air; United McGill (United Sheet Metal).
2. Round ducts: Fabricate round supply ducts using seam types identified in SMACNA “HVAC Duct Construction Standards,” Figure 3-1, RL-1, RL-4, or RL05. Figure RL-2 or RL-3 seam types may be used if spot-welded on 1-inch intervals. Comply with SMACNA “HVAC Duct Construction Standards,” Table 3-2 for galvanized steel gauges.
3. Flat oval ducts: Fabricate flat oval ducts with standard spiral lockseams (without intermediate ribs) or with butt-welded longitudinal seams in gauges listed in SMACNA “HVAC Duct Construction Standards,” Table 3-4.

F. Flat Oval Supply and Exhaust Fittings Fabrication:

1. 90 degree tees and laterals and conical tees: Fabricate to conform to SMACNA "HVAC Duct Construction Standards," Figures 3-4 and 3-5 with metal thicknesses specified for longitudinal seam straight duct.
2. Elbows: Fabricate in die-formed, gored, pleated, or mitered construction. Fabricate bend radius of die-formed, gored, and pleated elbows 1.5 times the elbow diameter. Unless elbow construction type is indicated, provide elbows meeting following requirements.
   a. Mitered elbows: Fabricate mitered elbows with welded construction in gauges specified below:
      1) Mitered elbows radius and number of pieces: Unless otherwise indicated, construct elbow to comply with SMACNA "HVAC Duct Construction Standards," Table 3-1.

Pressure Class -2 Inches to +2 Inches	
3 - 26	24
27 - 36	22
37 - 50	20
52 - 60	18
62 - 84	16

      2) Flat oval mitered elbows: Solid welded, same metal thickness as longitudinal seam flat oval duct.
      3) 90 degree, two-piece, mitered elbows: Use only for supply systems or exhaust systems for material handling classes A and B, and only where space restrictions do not permit use of 1.5 bend radius elbows. Fabricate with a single thickness turning vane.
   b. Mitered elbows are not approved for medium and high-pressure ductwork.
   c. Flat oval elbows gauges: Same as longitudinal seam flat oval duct.

G. Ductwork Hangers and Supports:
   1. Manufacturers:
      a. Acceptable manufacturers, subject to compliance with requirement.
      b. B-Line Systems, Inc.; Elcen Metal Products Company; Fee & Mason Manufacturing Company; Anvil International, Inc.; Michigan Hanger Company; PHD Manufacturing, Inc.; or equal.
   2. Reference product(s): Listed with respective product specification.
   3. Building attachments: Concrete inserts, powder actuated fasteners, or structural steel fasteners appropriate for building materials.
      a. Concrete inserts for suspended hangers: Galvanized formed "U" channel concrete insert and threaded clamping nut; Michigan #C-12 CONCT and #SPRC or #NUTC; or equal.
      b. Clamps for attachment to steel framework: Steel C-clamp, equipped with setscrew, locknut, and retaining strap; Michigan #200L +200C; or equal.
   4. Hangers and Supports:
      a. Hangers: Galvanized steel straps or bands or round steel threaded rod, sized according to Figures 5-1 to 5-9 of SMACNA Standards, suitable trapeze arrangement appropriate for the location for large or multiple ducts, fire resistant as required for applications involving fire-rated ceilings.

b. Hanger rod shall be fabricated from ASTM A36, steel, galvanized, continuously threaded, use double nuts and lock washers on threaded support rods.
c. Hangers installed in corrosive atmospheres: Electro-galvanized, all-thread rod or hot-dipped-galvanized rods with threads painted after installation.
d. Duct attachments: Sheet metal screws, blind rivers, or self-tapping metal screws; compatible with duct materials.
e. Trapeze and riser supports:
1) With galvanized steel ducts: Hot-dipped galvanized.

H. Duct Accessories:
1. Regulatory Requirements:
a. Products requiring electrical connection shall be in accordance with CCR, Title 8, and shall be listed and classified by UL as suitable for the purpose specified and indicated.
2. Ductwork and accessories shall be installed to provide a system free from buckling, warping, breathing, and vibrating. Ductwork installation shall permit installation of other required services without piercing, crimping, or reducing duct sizes. Where space conditions permit, full radius turns shall be used at offsets.
3. To ensure airtight ducts, seams shall be sealed with liquid- or mastic-type sealants. Taped joints will not be permitted. All joints shall be in accordance with SMACNA Seal Class A.
4. Duct sealants shall not be installed when surface and ambient temperatures are less than those recommended by sealant manufacturers. Temperatures during and after installation of duct sealants shall be maintained as recommended by the manufacturer.
5. No power actuated anchors shall be used.
6. Flexible duct connections:
a. Flexible connection material: Fire-retardant, waterproof, airtight, abrasion proof, ozone-resistant, neoprene coated woven glass fabric that is not affected by temperature as low as -10°F or as high as 200°F and manufactured for pressures involved. The coating shall not weigh less than 24 ounces per square yard.
b. Flexible duct connections shall be Venfabrics, Inc. “Ventglas”; Duro-Dyne Corporation “Neoprene”; or equal.
c. Fabric shall conform to the requirements of NFPA 90A, maximum flame spread rating of 25, smoke developed rating of 50 for all materials, including connecting tape and sealant when tested in accordance with the requirements of ASTM E84. Minimum density shall be 30 ounces per square yard.
d. Flexible connectors shall be UL-listed.
e. Flexible connectors shall be provided with the necessary angle, straps, bolts, clips, or other fasteners to secure the flexible material to the equipment and ducts.
f. Duct connections exposed to the weather shall be provided with approved sheet metal weather covers.
g. Flexible connections shall be designed to be removed and reinstalled without disassembling adjacent ductwork.

h. Flexible duct connectors shall be fabricated in accordance with SMACNA HVAC Duct Construction Standards – Metal and Flexible, and as indicated on the Drawings.

2.03 FANS

A. In-Line Centrifugal Fans:

1. In-line centrifugal fans shall be factory-fabricated assemblies having fan, fan motor, and fan housing. Fan capacities, electrical characteristics, special features and accessories shall be as indicated in the fan schedules. Fans shall bear the AMCA seal. Direct drive fans shall be Greenheck type SQ; or equal.
2. Centrifugal in-line fans: Belt driven or direct drive as indicated on Drawings for respective applications, bear AMCA Certified Ratings Seal for sound and air performance.
3. Housing: Square design, heavy gauge galvanized steel, equipped with square duct collars, two (2) removable access panels sized and arranged to permit easy access to all interior components, and universally adjustable mounting brackets for horizontal and vertical mounting. Provide fiberglass duct liner on interior of fan and motor housings.
4. Fan wheel: Constructed of aluminum, centrifugal backward inclined with wheel core, matched to inlet cone, statically and dynamically balanced.
5. Direct drive fans: Provide fan wheel mounted on motor shaft.
   a. Motor: Permanently lubricated, compatible for use with speed controls, open type with motor cover.
   b. Motor cover: Provide to separate motor from air stream as indicated.
6. Disconnect switch: Provide with each unit. Provide factory wiring from motor to junction box.
7. Isolator kits: Provide with each unit for hanging or base mounting as required, neoprene or spring type, unless specific type is indicated or required for a particular unit.
8. Accessories: Provide following with respective fans where indicated: Remote Fan Speed Control, solid state, capable of controlling fan speed from full speed to approximately half speed.
9. Suspend fans from structure above, unless respective unit is indicated on Drawings to be base mounted. Mount fans on vibration isolators and provide flexible duct connections.
10. Coordinate fan housing access panel orientation with access path.

PART 3 - EXECUTION

3.01 GENERAL

A. Examination, Coordination and Incorporation of Related Work:

1. Examine areas and conditions, with installer present, for compliance with requirements for installation tolerances, roof curbs, existing roof openings, equipment supports, ductwork, and other conditions affecting performance of fans.
2. Contractor shall notify Engineer of deficiencies that impact his ability to complete his work. The deficiencies will be corrected as directed by the Engineer.

3. Louvers: Where so indicated on Drawings, louvers will be furnished as a part of general construction work. Ductwork trades shall cooperate with general trades and coordinate louver features and performance.
4. Before installing insulation, verify that respective work to be insulated is complete, has been tested and cleaned, and is ready to be insulated.
5. Contractor shall obtain wall and ceiling construction information from General Construction Drawings and Specifications and coordinate diffusers, register and grille mounting arrangement and accessories with respect to adjacent construction.

B. Protection: Fully protect all surfaces exposed to the air stream and all unfinished parts of the materials and equipment against damage from whatever cause during the progress of the work and until final completion. All materials and equipment shall be covered while in storage and during construction in such manner that no finished surfaces shall be damaged or marred and all moving parts shall be kept perfectly clean and dry.
1. When installing insulation, use tarpaulins or other coverings to protect equipment, uncovered piping and ductwork from dirt and rubbish that may be caused by insulation installation operations.
2. Prior to starting insulation installation operations and while performing work, verify that environmental conditions are within manufacturer's recommendations for sealants, tapes, and other adhesives to be used.

3.02 DUCTWORK INSTALLATION

A. All sheet metal ductwork shall be erected in a first class and workmanlike manner and shall be in accordance with the applicable sections of CBC, CMC, and CEC, and in accordance with "Low Pressure Duct Standards" of the Sheet Metal and Air Conditioning Contractors National Association, Inc., and as specified above. No ductwork shall be fabricated or installed until it has been carefully coordinated with other trades. Ducts shall be located with sufficient space around equipment to allow normal operations and manufacturing activities. All transverse duct joints shall be taped airtight. Duct dimensions shown are "net" inside clear. Each air supply outlet and each air return or outside air intake shall have either an integral volume control device or shall be furnished with a volume damper.
1. Duct installation, general:
   a. Duct system pressure class: Construct and install each duct system for the specific duct pressure classification indicated.
   b. Install ducts with fewest possible joints.
   c. Secure joints with sheet metal screws.
   d. Seal all joints and seams. Apply sealer to male end connectors before insertion, and afterwards to cover entire joint and sheet metal screws.
   e. Flanged joints: Seal with neoprene rubber gaskets.
   f. Use fabricated fittings for all changes in directions, changes in size and shape, and connections.
   g. Install couplings tight to duct wall surface with projections into duct at connections kept to a minimum.
   h. Install ductwork generally in the location and manner shown and detailed on Drawings, with all fittings and connections made in accordance with applicable SMACNA Standards. Modifications or deviations required by job conditions must be approved by the Engineer prior to fabrication.

i. Provide and install duct accessories (dampers, turning vanes, and access doors) where called for and where shown on Drawings and where required.
   1) Ductwork and accessories shall be installed to provide a system free from buckling, warping, breathing, and vibration. Ductwork installation shall permit installation of other required services without piercing, crimping, or reducing duct sizes. Where space conditions permit, full radius turns shall be used at offsets.
   2) To ensure airtight ducts, seams shall be sealed with liquid- or mastic-type sealants. Taped joints will not be permitted. All joints shall be in accordance with SMACNA Seal Class A.
   3) Duct sealants shall not be installed when surface and ambient temperatures are less than those recommended by sealant manufacturers. Temperatures during and after installation of duct sealants shall be maintained as recommended by the manufacturer.
   4) No power actuated anchors shall be used.

j. Locate ducts, except as indicated otherwise, vertically and horizontally, parallel and perpendicular to building lines. Avoid diagonal runs. Install duct systems in shortest route that does not obstruct usable space or block access for servicing building and its equipment.

k. Install ducts close to walls, overhead construction, columns, and other structural and permanent enclosure elements of building.

l. Provide 1-inch minimum clearance between structure components, furring, and outside of duct insulation and outside of uninsulated duct.

m. Ductwork mounted lower than 7 feet – 0 inches above finished floor: Cover standing seams and other duct protrusions below 7 feet – 0 inches with an approved flexible bumper material, such as split Armaflex pipe insulation.

n. Provide flexible connections between sheet metal assemblies such as ductwork and plenums, and operating machines and/or mechanisms such as fans and air handlers.
   1) Flexible connections not less than 8 inches long (net) between connected sections of ductwork shall be held in place by 1-inch by 1/8 inch band iron bolted in place around entire perimeter of connecting ductwork.

o. Joint sealing during fabrication and assembly:
   1) Thoroughly seal all air ducts and taps against air leakage and all exterior and outside air ducts against moisture leakage. Paint or trowel sealer on joints before assembly.
   2) Thoroughly streamline all fittings in rectangular ducts around joints by applying a filler to cover all edges extending into the air stream.
   3) Butted flanged joints in ductwork shall be wiped smooth with a filler compound.
   4) Seal terminal box joints with field applied duct sealer.
   5) Flanged joints: Seal with neoprene rubber gaskets.

p. Adjusting and cleaning:
   1) Adjust volume control devices as required by testing and balancing procedures to achieve required airflow.
   2) Vacuum duct systems prior to final acceptance to remove dust and debris. Duct systems shall be cleaned with high power

vacuum machines. Equipment that may be harmed by excessive dirt shall be protected with filters, or bypassed during cleaning. Adequate access into ductwork shall be provided for cleaning purposes.

3.03 DUCTWORK HANGERS AND SUPPORTS

A. Preparation
   1. Coordinate locations of inserts, anchors, and clamps with supported work and with other work and related supports.
   2. Contractor shall be responsible for correcting omissions and conflicts that are due to failure to coordinate his hanger and support work.

B. Attachment to Structure:
   1. Follow manufacturer's load ratings and application data for products.
   2. Upper attachments to structures shall have an allowable load not exceeding 1/4 of failure (proof test) load, but are not limited to the specific methods indicated.
   3. Support duct hangers from building structural members. Do not attach hangers to roof deck or ceiling construction.
   4. Powder actuated concrete fasteners: Utilize only for attaching strap or band hangers to structure, following manufacturer's recommendations and instructions. Do not use for attachments to lightweight aggregate concrete or for attachments to slabs less than 4 inches thick. Install only after concrete is completely cured.

C. Installation of Duct Hangers and Supports:
   1. Install duct hangers and supports at proper intervals for the pressure class and conditions specified and prevailing in the system according to SMACNA Manual requirements, unless another arrangement is detailed or noted on Drawings. Supports shall be spaced to prevent visible duct deflection and loss of system integrity.
   2. Support horizontal ducts within 2 feet of each elbow and within 4 feet of each branch intersection.
   3. Support vertical ducts at maximum intervals of 16 feet and at every floor. Ductwork shall be supported by metal-strap hangers secured to the wall, with screw attachment to the sides of ducts. There shall be a minimum of one strap on each exposed side.

3.04 DUCT ACCESSORIES

A. General: Provide and install duct accessories where called for, where shown Drawings, and where required according to manufacturer's installation instructions, applicable portions of details of construction in SMACNA Standards, and applicable provisions of ductwork sections and drawings.

B. Application and Installation of Flexible Connections for Ductwork:
   1. Flexible connections in ducts shall be installed in folds, and of sufficient length to accommodate the maximum deflection resulting from vibration and contraction without causing strain.
   2. Minimum length in folded position shall be 6 inches. Allow for at least 1-inch of slack.

3. Provide flexible connections between sheet metal assemblies and equipment, and between different sheet metal assemblies, as called for in respective specifications and as shown on respective Drawings.
4. Installation: Governed by respective application specifications and details.

3.05 INSTALLATION OF INSULATION, GENERAL

A. Insulation Work shall be performed by qualified tradesmen, following manufacturer's written instructions for insulation products, in compliance with applicable building codes and industry standards.

B. Environmental Requirements: Ambient temperatures and conditions during insulation installation operations and curing period, when applicable, shall comply with manufacturer's requirements for products such as adhesives, mastics, and insulation cements.

3.06 INSTALLATION OF DUCT INSULATION

A. Continue insulation and vapor barrier through walls, sleeves, and other duct penetrations, except where prohibited by code. Coordinate installation with firestopping.

B. Install insulation over clean, dry surfaces with adjoining sections firmly butted together and covering all surfaces. Properly fill voids and holes and properly seal raw edges. Neatly finish insulation at supports, protrusions, and interruptions.

C. Where service access is required, bevel and seal ends of insulation.

D. Glue and pin insulation to ductwork with fireproof adhesive so that there is no sagging and no vapor barrier penetration. Apply adhesive so as to attain no less than 50% contact coverage of all sheet metal surfaces. All joints shall have 1 1/2 inch minimum lap and shall be taped with 100% coverage of fireproof adhesives.

E. Insulation on underside of duct 24 inches wide or greater shall be secured with mechanical fasteners and speed clips spaced approximately 18 inches on center. Protruding ends of fasteners shall be cut off flush after speed clips are installed. Where duct is exposed and where vapor seal is required, seal with same tape used for joints.

3.07 INSTALLATION (FANS)

A. Installation shall be in strict accordance with the best practice of the several trades and with the respective manufacturer's instructions and recommendations. Installation shall include furnishing the required oil and grease for initial operation in accordance with the manufacturer's instructions.

B. Install units level and plumb. Align, lubricate, start, and balance units in accordance with manufacturer's written instructions, with proper clearance and access for inspection and servicing.

C. Install units with resilient mountings and flexible electrical leads.

D. Provide flexible duct connections between fans and connecting ductwork. Ensure metal components of flexible connections are parallel and have 1-inch minimum flex between ductwork and fan while running.

E. Install fan related items in a manner that will ensure vibration isolation provisions are not short circuited.

F. Do not operate fans for any purpose until ductwork is clean, bearings lubricated, and fan has been test run under supervision.

G. Install fan-restraining snubbers where side torque or thrust may develop and where indicated on Drawings. Flexible connections shall not be in tension while fan is running.

H. Provide safety screen where fan inlet or outlet is exposed.

I. Provide speed controllers where indicated on Drawings for particular fans.

3.08 INSTALLATION OF VIBRATION CONTROL PRODUCTS

A. Performance of Isolators:
   1. General: Comply with minimum static deflections recommended by ASHRAE for selection and application of vibration isolation materials and units as indicated.
   2. Manufacturer's recommendations: Except as otherwise indicated, comply with manufacturer's recommendations for selection and application of vibration isolation materials and units.

B. Applications:
   1. General: Except as otherwise, indicated, select vibration control products in accordance with the latest edition of ASHRAE Handbook, HVAC Applications, "Sound and Vibration Control." Where more than one type of product is offered, selection is Installer's option.

C. Installation:
   1. General: Except as otherwise indicated, comply with manufacturer's instructions for installation and load application to vibration control materials and units. Adjust to ensure that units have equal deflection, do not bottom out under loading, and are not short-circuited by other contacts or bearing points. Remove space locks and similar devices intended for temporary support during installation.
   2. Install units between substrate and equipment as required for secure operation and to prevent displacement by normal forces, and as indicated.
   3. Adjust leveling devices as required to distribute loading uniformly onto isolators. Shim units as required where substrate is not level.

3.09 TESTING AND ADJUSTING EQUIPMENT AND CONTROLS

A. Perform following operations and checks before units are operated for any purpose:
   1. Verify shipping blocking and bracing have been removed.
   2. Verify unit is secure on mountings and supporting devices and connections for ductwork, electrical, etc. are complete. Verify proper thermal overload protection is installed in motors, starters and disconnects.
   3. Perform specified cleaning and adjusting.
   4. Disconnect fan drives from motors, verify proper motor rotation, and verify fan wheel free rotation and smooth operation of bearings. Reconnect fan drive systems, align belts, and install belt guards.

B. The equipment and controls of this Section shall be completely tested, adjusted and placed in operating condition.

C. Retest equipment and controls, as necessary, during the progress of the work. No work shall be covered until it is properly tested and made tight.

D. Supply the testing apparatus and make all necessary connections for applying the tests.

E. When about to turn the apparatus over to the Owner, put all parts of the apparatus in perfect working order and thoroughly clean out all parts of the equipment.

F. Clean exterior and interior surfaces of each unit. Vacuum clean fan wheel and surfaces exposed to the air handled by the unit.

3.10 TESTING, ADJUSTING AND BALANCING OF HEATING, VENTILATING AND AIR CONDITIONING SYSTEMS

A. Testing Ductwork for Air Leakage:

1. Test procedure:

a. When all of the main duct runs have been installed, but prior to grilles, diffuser and terminal devices being installed, perform a ductwork leakage test. Perform tests before insulation is applied.

b. Submit to the Engineer for approval the appropriate forms indicating the system that was tested, conditions under which ductwork was tested, and conclusions as a result of testing.

c. Construct, erect, and leak test a representative sample of the duct construction to be used as selected by the Engineer.

d. The sample specimen shall include the complete air distribution system for this project.

e. The leak test shall be at the specific duct pressure classification indicated.

f. Leakage test procedures shall follow the outline and classifications in the SMACNA HVAC Duct Leakage Test Manual.

g. The leakage amount shall not exceed the allotted amount for the pressure class or the allotted amount for the sample specimen.

h. Where a system fails to meet allotted leakage level, the Contractor shall correct all deficiencies to bring each system into compliance and shall retest it until acceptance leakage is demonstrated.

i. Leakage classification shall be Leakage Class 12 (for up to 3 inch duct construction class) and Seal Class B.

j. Contractor shall seal all leaks that generate noise even if the system leakage amount does not exceed the allowable limit.

k. Test apparatus shall be a high pressure portable blower with an orifice flow measuring device. Accurately calibrate each orifice assembly with its own calibration curve.

l. Tests and necessary repair shall be completed prior to concealment of ducts and prior to starting testing, adjusting, and balancing work.

B. Retest equipment, as necessary, during the progress of the work. Do not cover work until it is properly tested and made tight.

C. Methodology: Perform testing and balancing in complete accordance with NEBB National Standards for Field Measurements and Instrumentation.

D. Adjust and balance supply, return and exhaust fans to design requirements and to tolerance as specified. Change sheaves and belts required to obtain design air quantities, using belts and sheaves furnished by fan supplier.

1. Examine and record motor electrical characteristics, RPM, service factor, horsepower, brake horsepower, actual amperage and voltage for each leg, and full load amperes. Check and record starter heater sizes and rating and replacement belt sizes.
2. Make pitot tube traverse (minimum of 16 point) of main supply duct and adjust fan drives to obtain design CFM at fans. Seal all test holes with suitable hole plugs.
3. Adjust system for design CFM recirculated air.
4. Adjust system for design CFM outside air.
5. Adjust all main supply and return air ducts to proper design CFM.
6. Adjust all zones to proper design CFM, supply and return.

E. In the event that system deficiencies prevent balancing and adjusting system and equipment to design conditions, Contractor shall provide required corrective measures to bring systems to design conditions at no change in contract price.
   1. Should corrective measures made necessary by system deficiencies require retesting, adjusting and balancing, that work shall be performed by the Testing and Balancing Contractor at no additional cost.

F. Balancing Contractor: Arrange with the Owner a time and provide instruction of Owner's personnel as to the proper operation and maintenance of equipment.

G. Restoration:
   1. Restore work affected by test procedures.
   2. Patch insulation, ductwork and housings using materials identical to those removed.
   3. Seal ducts and test for and repair leaks.
   4. Seal insulation to re-establish integrity of vapor barriers.

H. Provide a final written report that shows conformance to the Specifications. Clearly note any deviations from the Specifications and known reasons for the differences.

3.11 DEMONSTRATION

A. Demonstrate equipment operation to Owner's operating and maintenance personnel. Instruct personnel in procedures and schedules related to startup and shutdown, troubleshooting, servicing, preventive maintenance, and how to obtain replacement parts.

B. Familiarize personnel with contents of Operating and Maintenance Manuals.

C. Schedule demonstration and instruction with at least 7 days advance notice.

END OF SECTION

THIS PAGE INTENTIONALLY BLANK

SECTION 16010

GENERAL ELECTRICAL REQUIREMENTS

PART 1 - GENERAL

1.01 SECTION INCLUDES

A. Work Included:

1. Provide all required labor, project equipment and materials, tools, construction equipment, safety equipment, transportation, and test equipment, and satisfactorily complete all electrical work shown on the Drawings, included in these Specifications, or required for a complete and fully operating facility. In addition, provide wiring for the equipment that will be provided under other Divisions of these Specifications.
2. Provide conduit, wire and field connections for all motors, motor controllers, control devices, control panels and electrical equipment furnished under other Divisions. Coordinate with the supplier of electrical equipment specified under other Divisions.
3. Provide all conduit, wiring and terminations for all field-mounted instruments furnished and mounted under other Divisions, including process instrumentation primary elements, transmitters, local indicators and control panels. This also includes lightning and surge protection equipment wiring at process instrumentation transmitters if required. Contractor shall install vendor furnished cables specified under other Divisions.
4. Provide a complete raceway system for the specialty cable systems. Install the specialty cable systems in accordance with the system manufacturer’s installation instructions. Review of the raceway layout, prior to installation, with the system supplier and cable manufacturer to ensure raceway compatibility with the system and materials being furnished. Where redundant cables are furnished, install them in separate raceways.
5. Provide raceway and power wiring for all heating, ventilation and air conditioning equipment furnished under other related Divisions. Refer to HVAC drawings and related specifications for power requirements. .
6. Auxiliary Devices: Provide conduit and wire for power and control for all auxiliary devices such as solenoid valves, pressure switches, and instruments that are included as part of a manufacturer's packaged system (i.e., all systems specified in Divisions 11 through 15. Contractor shall be responsible for conduit and wire to these auxiliary devices even if not specifically shown on the Drawings or specified herein.
7. Provide concrete, excavation, backfill and steel reinforcement required for encasement, installation or construction of the WORK of the various Sections of Division 16 as a part of the WORK under the respective Sections, including duct banks, manholes, handholes, equipment housekeeping pads and light pole bases.

1.02 CODE COMPLIANCE AND REFERENCE STANDARDS

A. Electric equipment, materials and installation shall comply with the National Electrical Code (NEC) and with the latest edition of the following codes and standards:

1. National Electrical Safety Code (NESC)

2. Occupational Safety and Health Administration (OSHA)
3. National Fire Protection Association (NFPA)
4. National Electrical Manufacturers Association (NEMA)
5. American National Standards Institute (ANSI)
6. Insulated Cable Engineers Association (ICEA)
7. Instrument Society of America (ISA)
8. Underwriters Laboratories (UL)
9. Factory Mutual (FM)
10. Institute of Electrical and Electronics Engineers
11. American Society of Testing Materials (ASTM)
12. California Electrical Code
13. Local Utility Company requirements

B. Where reference is made to one of the above standards, the revision in effect at the time of bid opening shall apply.

C. All materials and equipment for which a UL standard exists, shall bear a UL label. No such material or equipment shall be brought onsite without a UL label affixed.

D. If the issue of priority is due to a conflict or discrepancy between the provisions of the Contract Documents and any referenced standard, or code of any technical society, organization or association, the provisions of the Contract Documents will take precedence if they are more stringent or presumptively cause a higher level of performance. If there is any conflict or discrepancy between standard specifications, or codes of any technical society, organization or association, or between Laws and Regulations, the higher performance requirement shall be binding on the Contractor, unless otherwise directed by the Owner/Engineer.

E. In accordance with the intent of the Contract Documents, the Contractor accepts the fact that compliance with the priority order specified shall not justify an increase in Contract Price or an extension in Contract Time nor limit in any way, the Contractor's responsibility to comply with all Laws and Regulations at all times.

1.03 SUBMITTALS

A. Shop Drawings shall be custom prepared for this project and submitted as listed in each of the Electrical Specification Sections. Shop drawings shall include the following:
1. Complete materials list stating manufacturer, brand name and catalog number of each item or class of material.
2. For equipment, panels, boxes, control devices, wiring devices, and other uniquely-tagged items as indicated on the Drawings, include the respective tag(s) on each applicable shop drawing and cut sheet.
3. Shop drawings for grounding work not specifically indicated on the drawings but required under the NEC.
4. Front, side and rear elevations along with top views with required dimensional data.
5. Location of conduit entrances and access plates.
6. Catalog cuts defining component data.
7. Connection diagrams, terminal numbers, internal wiring diagrams, conductor size and cable numbers.
8. Method of anchoring, seismic requirements and weight.
9. Types of materials and finish.
10. Nameplates.

11. Temperature limitations, as applicable.
12. Voltage requirements, phase and current, as applicable.
13. Front and rear access requirements.
14. Test reports.

B. O&M Manuals and other documentation, shall be submitted in accordance with these contract documents. The manuals shall be prepared specifically for this installation and shall include catalog data sheets, drawings, equipment lists, descriptions, parts lists, etc. to instruct operating and maintenance personnel unfamiliar with such equipment. All manuals and other documentation shall be submitted as listed in each of the Electrical Specification Sections and include the following:
1. A comprehensive index.
2. A complete "As-built" set of approved shop drawings.
3. A complete list of the equipment supplied, including serial numbers, ranges and pertinent data.
4. A table listing of the "as left" settings for all timing relays and alarm and trip set points.
5. System schematic drawings "As-Built", illustrating all components, piping and electrical connections of the system supplied under this Section.
6. Detailed service, maintenance and operation instructions for each item supplied.
7. Special maintenance requirements particular to this system shall be clearly defined, along with special calibration and test procedures.
8. The operating instructions shall also incorporate a functional description of the entire system, with references to the systems schematic drawings and instructions.
9. Complete parts list with stock numbers, including spare parts.

C. Record Drawings shall be promptly furnished when the equipment installation is complete. Payment may be withheld until Record Drawings have been furnished and approved.

D. At the time of delivery of the equipment, the Contractor shall have an approved shop drawing in his possession for the Owner's Inspector and/or Owner's Engineer for verification.

E. As-Built Drawings: As the work progresses, legibly record all field changes on a set of Project Contract Drawings, hereinafter called "As-Built Drawings". The As-Built Drawings and specifications shall be kept up to date throughout the project. As-Built Drawings shall accurately show the installed condition of the following items at a minimum:
1. One-line Diagram(s).
2. Raceways and pullboxes.
3. Conductor sizes and conduit fills.
4. Panelboard Schedule(s).
5. Control Wiring Diagram(s).
6. Luminaire Schedule(s)
7. Luminaire, receptacle and switch outlet locations.
8. Underground raceway and duct bank routing including manhole/handhole locations.
9. Plan view, sizes and locations of switchgear, switchboards, distribution transformers, motor control centers and panelboards.

1.04 TESTS

A. The Contractor shall be responsible for factory and field tests indicated in Division 16, as required by the Engineer and as required by other authorities having jurisdiction.

B. Furnish necessary testing equipment

C. Pay the costs of the tests, including replacement parts and labor due to damage resulting from damaged equipment or from testing and correction of a faulty installation.

D. Reporting
   1. Where test reporting is indicated, submit proof-of-design test reports for mass-produced equipment with the Shop Drawings.
   2. Submit factory performance test reports for custom-manufactured equipment for approval prior to shipment.
   3. Submit field test reports for review prior to Substantial Completion.

E. Remove and replace equipment or material that fails a test, or, if the Engineer approves, repair and retest for compliance.

F. Connections to equipment or materials with a factory warranty shall be as recommended by the manufacturer and shall be performed in a manner that does not void the warranty.

1.05 PERMITS AND INSPECTIONS

A. Obtain permits and pay all fees required for permits inspections.

B. Pay inspection, connection and turn-on service charges required by the utility company.

C. The Engineer may inspect the fabricated equipment at the factory before shipment to job site. Provide the Engineer with sufficient prior notice so that an inspection can be arranged at the factory.

D. Inspection of the equipment at the factory by the Engineer will be made after the manufacturer has performed satisfactory checks, adjustments, tests and operations.

E. Favorable review of the equipment at the factory only allows the manufacturer to ship the equipment to the project site. The Contractor shall be responsible for the proper installation and satisfactory startup operation of the equipment to the satisfaction of the manufacturer and the Engineer.

1.06 DEMOLITION AND RELATED WORK

A. General
   1. Perform electrical demolition work as indicated.
   2. The Contractor is cautioned that demolition work may also be indicated on non-electrical Drawings.
   3. Coordinate with all trades regarding electrical de-energization, disconnection and removal, and the overall sequence of construction.

B. Electrical Requirements for Removed Equipment
   1. Remove dedicated wiring and exposed conduits back to the source.

2. Where control wiring to be demolished shares a conduit with other wiring to remain, the control wiring shall be abandoned in place. Where power wiring to be demolished shares a conduit with other wiring to remain, the power wiring shall be removed.
3. Remove power wiring from the power source to the first pullbox or manhole remote from the panel and abandon in place the remaining wiring.
4. Abandon in place wiring routed through encased conduits and cut encased conduits flush to the floor and grout flush with the floor.
5. Remove remote mounted starters, disconnect switches, circuit breakers, sensors and transmitters

C. Where new lighting and receptacles are installed in existing structures, remove old lighting, receptacles, switches, wiring and conduits.

D. Junction Boxes
1. Wiring and conduits indicated to be extended shall be terminated in a new junction box with terminal strips.
2. Provide a junction box with a NEMA rating in accordance with the area in which it is located and sized as required by the NEC.
3. Properly identify wires and terminals before disconnection.

E. Removed materials and equipment not indicated to be returned to the Owner shall, upon removal, become the Contractors property and shall be disposed of off-site.

F. Remove and relocate material and equipment indicated to be relocated or reused, and reinstall with care in order to prevent damage.

G. Place materials indicated to be returned to the Owner in boxes, with the contents clearly marked, and store at a location determined by the Engineer.

H. Identification
1. Where switchgear, motor control centers, switchboards or panelboards are indicated to have components, assemblies or circuits removed and/or reconnected, provide the affected equipment compartments with new engraved nameplates matching the existing. Modify panelboard schedule(s) to indicate revised circuits.
2. Pencil or magic marker markings directly on equipment will not be acceptable.

1.07 COORDINATION

A. Coordinate the electrical work with the other trades, code authorities, utilities, and the Owner.

B. Where connections must be made to existing installations, properly schedule all the required work with the Owner, including the power shutdown periods. Schedule and carry out shutdowns so as to cause the least disruption to operation of the plant and privately owned facilities.

C. Submit a written sequencing request indicating the sequence and duration of activities to be performed during the plant shutdown.

D. Switching, safety tagging and other project related tasks required for shutdown or to isolate existing equipment, shall be performed by the Contractor.

E. In no case shall the Contractor begin any work in, on or adjacent to existing equipment without written authorization from the Owner.

F. Modifications
   1. Perform modifications or alterations to existing electrical facilities as required to successfully install and integrate the proposed electrical equipment as indicated.
   2. Perform modifications to existing equipment, panels and cabinets in a professional manner. Repair coatings of existing equipment to match existing
   3. The costs for modifications to existing electrical facilities that are required for a complete and operable system shall be included as part of the Work.

G. Existing Utilities
   1. Exercise extreme caution when digging trenches to not damage existing underground utilities.
   2. The cost of repairs of damages caused during construction shall be included as a part of the Work.

H. Field Verifications
   1. Visit the site before submitting a Bid to become better acquainted with the Work of this Contract.
   2. The lack of knowledge will not be accepted as justification for extra compensation to perform the Work.
   3. The Contractor shall be responsible for identifying available existing circuit breakers in lighting panel for the intended use as required.
   4. The Contractor shall be responsible for field verifying the available space in switchgear, switchboards and/or motor control centers to integrate new overcurrent protective devices meeting the requirements of these Specifications.
   5. The cost for the above field verifications shall be included as part of the Work.

I. Installation of Temporary Power
   1. To facilitate the continuous operation of existing equipment, provide temporary equipment as indicated.
   2. Submit installation and connection details for favorable review and acceptance by the Engineer.
   3. Costs associated with these temporary installations shall be included as part of the Work.
   4. Temporary wiring and equipment shall remain the property of the Contractor unless indicated otherwise.

1.08 ELECTRICAL SERVICE

A. Contact the serving utility and verify compliance with requirements before construction.

B. Coordinate schedules and payments for Work by utilities.

1.09 LOCATIONS

A. General: Use equipment, materials and wiring methods suitable for the types of locations in which they are located, as defined in Paragraph B. herein.

B. Definitions of Types of Locations:
   1. Dry Locations: All those indoor areas which do not fall within the definitions below for Wet, Damp, Hazardous, or Corrosive Locations and which are not otherwise designated on the Drawings.

2. Wet Locations: All locations exposed to the weather, whether under a roof or not, unless otherwise designated on the Drawings.
3. Damp Locations: All spaces wholly or partially underground, or having a wall or ceiling forming part of a channel or tank, unless otherwise designated on the Drawings.
4. Hazardous Locations: All areas in which fire or explosion hazards may exist, normally or accidentally, due to flammable gases or vapors, flammable liquids, combustible dust, or ignitable fibers or flyings. These areas are shown on the Drawings, together with the Class and Division designations as defined in the NEC, determining the enclosure types and wiring methods required.
5. Corrosive Locations: Areas where chlorine or sulfur dioxide gas under pressure, sulfuric acid, or liquid polymer are stored or processed. These areas are shown on the Drawings.

C. Unless otherwise specified herein or shown on the Drawings, electrical enclosures and associated installations shall have the following ratings:
1. NEMA 1 gasketed or 12 for dry, non-process indoor above grade locations
2. NEMA 3R for outdoor installations identified not to be hazardous or corrosive.
3. NEMA 4X enclosures of Type 316 stainless steel in corrosive areas except in chlorine and HFS areas where non-metallic enclosures shall be provided.
4. NEMA 7 enclosures (and listed for use in the area classifications shown) for "Class 1 Div. 1 Group D" and "Class 1 Div. 2 Group D" hazardous locations shown on the Drawings or as defined in NFPA 820 or other codes.
5. NEMA 9 enclosures (and listed for use in the area classifications shown) for "Class 1 Div. 1 Group E, F and G" and "Class 1 Div. 2 Group E, F and G" hazardous locations shown on the Drawings or as defined in NFPA 820 or other codes.

D. Equipment, materials and installation in areas designated as hazardous on the Drawings shall comply with NEC Articles 500, 501, 502 and 503.

E. Equipment and materials installed in areas designated as hazardous on the Drawings shall be UL Listed for the appropriate hazardous area classification.

1.10 PHASE BALANCING

A. The Drawings do not attempt to balance the electrical loads across the phases. Circuits on motor control centers and panelboards shall be field connected to result in evenly distributed loads across all three phases.

B. Field balancing of circuits shall not alter the conductor color coding requirements defined in Section 16120.

1.11 SIZE OF EQUIPMENT

A. Investigate each space in the structure through which equipment must pass to reach its final location. Coordinate shipping splits with the manufacturer to permit safe handling and passage through restricted areas in the structure.

B. The equipment shall be kept upright at all times during storage and handling. When equipment must be tilted for passage through restricted areas, brace the equipment to ensure the tilting does not impair the functional integrity of the equipment.

PART 2 - PRODUCTS

2.01 GENERAL

A. Products that are specified by manufacturer, trade name or catalog number establish a standard of quality and do not prohibit the use of equal products of other manufacturers provided they are favorably reviewed by the Engineer prior to installation.

B. It is the intent of these Specifications and Drawings to secure high quality in all materials and equipment in order to facilitate operation and maintenance of the facility. All equipment and materials shall be new and the products of reputable suppliers having adequate experience in the manufacture of these particular items. For uniformity, only one manufacturer will be accepted for each type of product. All equipment shall be designed for the service intended and shall be of rugged construction, of ample strength for all stresses, which may occur during fabrication, transportation, erection, and continuous or intermittent operation. All equipment shall be adequately stayed, braced and anchored and shall be installed in a neat and workmanlike manner. Appearance and safety, as well as utility, shall be given consideration in the design of details.

C. All components and devices installed shall be standard items of industrial grade, unless otherwise noted, and shall be of sturdy and durable construction suitable for long, trouble-free service. Light-duty, fragile and competitive grade devices of doubtful durability shall not be used.

D. Where a NEMA enclosure type is indicated in a non-hazardous location, use that type of enclosure despite the fact that certain modifications such as cutouts for control devices may negate the NEMA rating.

E. Temperature Ratings of Equipment Terminations and lugs shall be rated for use with 75-degree C conductors. Wire sizes in the Contract Documents are based on NEC ampacity tables using the 75-degree C ratings.

2.02 MOUNTING HARDWARE

A. Miscellaneous Hardware
   1. Provide nuts, bolts and washers constructed of stainless steel.
   2. Provide threaded rods for trapeze supports constructed from continuous threaded galvanized steel, 3/8-inch diameter minimum.
   3. Slotted channel
      a. Construct struts for mounting of conduits and equipment of stainless steel.
      b. Where contact with concrete or dissimilar metals may cause galvanic corrosion, use suitable non-metallic insulators in order to prevent such corrosion.
      c. Slotted channel manufacturer shall be Unistrut, B-Line or approved equal.
   4. Provide plastic protective end caps for all exposed slotted channel ends. End caps shall be manufactured by Unistrut P2860-33 or approved equal
   5. Provide stainless steel expansion anchors for attaching equipment to concrete walls, floors and ceilings. Expansion anchors shall be manufactured by Power Fasteners, Inc and be the "Power-Bolt" or "Power-Stud" series or approved equal.

2.03 LENS COLOR SCHEME

A. Indicating light lens colors shall be red for “Run”, “Open” or “On”; green for “Stop”, “Close” or “Off”; and amber for alarm.

2.04 NAMEPLATES

A. For each piece of electrical equipment, provide a manufacturer's nameplate showing his name, location, the pertinent ratings and the model designation.

B. Identify each piece of equipment and related controls with a rigid laminated engraved phenolic nameplate. Engrave nameplates with the inscriptions indicated on the Drawings and, if not so indicated, with the equipment name. Securely fasten nameplates in place using fasteners constructed of brass, cadmium plated steel or stainless steel and screwed into inserts or tapped holes as required. Where no inscription is indicated on the Drawings, furnish nameplates with an appropriate inscription furnished by the Engineer upon prior request by the Contractor.

C. Provide engraved characters of the block style, with no characters smaller than 1/8 inch top to bottom.

D. Each control device, including pushbuttons, control switches, and indicating lights, shall have an integral legend plate or nameplate indicating the device function. These shall be inscribed as indicated on the Drawings or as favorably reviewed by the Engineer.

E. At the service entrance equipment, provide sign OR signs inscribed with 1/4 inch letters: "EMERGENCY STANDBY POWER IS SUPPLIED FROM THE GENERATOR BUILDING OR FROM PORTABLE GENERATOR CONNECTION PANEL".

2.05 PAINTING

A. Equipment: Refer to each electrical equipment section of these Specifications for painting requirements of equipment enclosures. Repair any final paint finish, which has been damaged or is otherwise unsatisfactory, to the satisfaction of the Engineer.

B. Wiring System: Paint all exposed conduits, boxes and fittings to match the color of the surface to which they are affixed. Paint finishes shall include proper surface preparation, prime coat and a final finish coat, and shall conform to Section 09960.

PART 3 - EXECUTION

3.01 REQUIREMENTS

A. All electrical installations shall conform to the codes and standards outlined in this Section.

3.02 WORKMANSHIP

A. Assign a qualified representative who shall supervise the electrical construction work from beginning to completion and final acceptance.

B. Perform all labor using qualified craftsmen, who have had experience on similar projects. Provide first-class workmanship for all installations.

C. Ensure that all equipment and materials fit properly in their installations.

D. Perform any required work to correct improperly fit installations at no additional expense to the Owner.

E. Provide materials and incidental required for a complete and operable system, even if not required explicitly by the Contract Documents.

F. Typical incidentals are terminal lugs not furnished with vendor-supplied equipment, compression connectors for cables, splices, junction and terminal boxes, and control wiring required by vendor-furnished equipment to connect with other equipment indicated in the Contract Documents.

3.03 EXCAVATION AND BACKFILL

A. Provide the excavations for electrical equipment foundations and trenches for conduits as shown on the Drawings.

B. Exercise caution during all excavation work and avoid damage to existing underground pipes. Exercise extreme caution when working near existing electrical conduits and facilities. Field verify the location of all electrical facilities before proceeding with any nearby work.

C. Refer to Division 2, Earthwork, of these Specifications and/or Structural Contract Documents for all excavation and backfilling work.

3.04 CONCRETE

A. Where shown on the Drawings or specified, provide the required concrete installations for conduit encasement and equipment foundations.

B. Refer to Division 3, Concrete, of these Specifications and/or Structural Contract Documents for all concrete work.

3.05 CONDUCTOR IDENTIFICATION

A. Identify all wires and cables in conformance with the requirements of Sections 16120 and 16124. This requirement applies to all equipment provided under this contract, regardless of Division, as well as to all conductors provided or worked on during this contract.

3.06 CONCRETE HOUSEKEEPING PADS

A. Provide concrete housekeeping pads for indoor floor-standing electrical equipment.

B. Install all floor-mounted equipment on 4-inch-high reinforced concrete pads. The Contractor, suppliers, and fabricators shall take this requirement into consideration when designing, fabricating, and installing panels, motor control centers, and other enclosures so that height above the floor of the operating handles of electrical devices meets the requirements of these Specifications and applicable codes.

C. Provide concrete housekeeping curbs 3-inches above the finished floor or grade for conduit stub-ups in indoor locations that are not concealed by equipment enclosures.

3.07 CUTTING, DRILLING, AND WELDING

A. Provide any cutting, drilling, and welding that is required for the electrical construction work.

B. Structural members shall not be cut or drilled, except when favorably reviewed by the Engineer. Use a core drill wherever it is necessary to drill through concrete or masonry.

C. Provide the required welding for equipment supports. Conduits and fittings shall not be welded to structural steel.

D. Perform patch work with the same materials as the surrounding area and finish to match, as specified in Division 3 of these Specifications.

3.08 METAL PANELS

A. Mount all metal panels which are mounted on or abutting concrete walls in damp locations or any outside walls 1/4 inch from the wall, and paint the back sides of the panels with a high build epoxy primer. Film thickness shall be 10 mils minimum.

3.09 PROTECTIVE DEVICE COORDINATION

A. Perform power system studies and provide protective device coordination in accordance with Section 16961.

3.10 TESTING

A. Perform acceptance testing in accordance with Section 16950.

B. Perform additional testing as indicated within specific equipment sections.

3.11 EQUIPMENT STORAGE AND PROTECTION

A. During construction, provide adequate storage for all equipment and materials that will become part of the completed facility so that it is protected from weather, dust, water, and other environmental impacts, or damage from construction operations.

B. Store and protect products in accordance with manufacturer's instructions. Seals and labels shall be intact and legible.

C. Store moisture sensitive products including electrical equipment, instruments and controls in weathertight, humidity and temperature-controlled enclosures to avoid condensation and dust buildup.

D. Arrange storage of products to permit access for inspection. Periodically inspect to assure products are undamaged and are maintained under specified conditions.

E. Exercise care at all times after installation of equipment, motor control centers, etc., to keep out foreign matter, dust, dirt, debris, or moisture. Use protective sheet-metal covers, canvas, heat lamps, etc., as needed to ensure equipment protection.

3.12 CLEANING EQUIPMENT

A. Before final acceptance, thoroughly clean the electrical Work of cement, plaster and other materials.

B. Clean out and vacuum all construction debris from the bottom of all equipment.

C. Provide and touch-up to original condition any factory painting that has been marred or scratched during shipment or installation, using paint furnished by the equipment manufacturer.

D. Remove temporary tags, markers, stickers and the like.

E. Remove all oil and grease spots with a non-flammable cleaning solvent by carefully wiping and scraping cracks and corners.

F. Clean luminaires inside and out.

G. Dispose of cleaning debris and refuse off-site.

END OF SECTION

SECTION 16110

ELECTRICAL RACEWAY SYSTEMS

PART 1 - GENERAL

1.01 SCOPE OF WORK

A. Furnish and install complete raceway systems as shown on the drawings and as specified herein.

B. Raceways and conductors that are listed on the conduit and cable schedules are generally not shown on the Drawings, except where they are required to pass through a restricted or designated space and the Contractor would benefit from additional information. Conduit block diagrams indicate exposed conduits as solid lines and shall be run near the ceilings or along walls of the areas through which they pass and shall be routed to avoid interferences with HVAC ducts, cranes and hoists, lighting fixtures, doors and hatches, etc. Conduit block diagrams indicate concealed or buried conduits as dashed lines and shall be run in underground duct banks, center of concrete floor slabs, in partitions, or above hung ceilings as required.

C. In the event that individual equipment loads provided are larger than indicated in the Contract Documents, revise raceways, conductors, starters, overload elements, and branch circuit protectors as necessary in order to control and protect the increased connected load in conformance to NEC requirements as part of the WORK.

1.02 REFERENCE STANDARDS

A. American National Standards Institute (ANSI) Publications:
1. C80.1 Specification for Zinc Coated Rigid Steel Conduit
2. C80.5 Specifications for Rigid Aluminum Conduit

B. Federal Specifications (FS):
1. FS W C 1094 W C 1094A Conduit and Conduit Fittings, Plastic, Rigid
2. FS WW C 540 WW C 540A Conduit, Metal, Rigid, (Electrical, Aluminum)
3. WW C 540C Conduit, Metal, Rigid & Coupling, Elbow & Nipple, Electrical Conduit, Aluminum
4. FS WW C 566 WW C 566C Flexible Metal Conduit

C. National Electrical Manufacturers Association (NEMA) Publications:
1. RN 1 Polyvinyl Chloride Externally Coated Galvanized Rigid Steel Conduit and Electrical Metallic Tubing
2. TC2 Electrical Polyvinyl Chloride (PVC) Conduit
3. TC 6 PVC and ABS Plastic Utilities Duct for Underground Installation
4. TC14 Reinforced Thermosetting Resin Conduit (RTRC) and Fittings

D. Underwriters Laboratories (UL) Standards:
1. 6 Rigid Metal Electrical Conduit
2. 6A Electrical Rigid Metal Conduit – Aluminum, Red Brass and Stainless Steel

3. 360 Liquid-Tight Flexible Metal Conduit
4. 651 Electrical Rigid Nonmetallic Conduit and Fittings
5. 651A Type EB and A Rigid PVC Conduit and HDPE Conduit
6. 2515 Aboveground Reinforced Thermosetting Resin Conduit

1.03 SUBMITTALS

A. Submit complete catalog cuts of raceways, fittings, boxes, supports, and mounting hardware, marked where applicable to show proposed materials and finishes.

B. Prepare as-built drawings of encased concealed and exposed raceways, ducts, raceways, junction boxes, pull boxes, and electrical and instrumentation equipment.

1.04 LOCATIONS

A. Refer to Section 16010 for definitions of types of locations.

PART 2 - PRODUCTS

2.01 GENERAL

A. Pull and junction boxes, fittings and other indicated enclosures that are dedicated to the raceway system shall comply with the requirements of this Section.

B. Provide exposed conduit of 3/4-inch minimum trade size and encased conduit of 1-inch minimum trade size.

C. The use of short sections of 1/2-inch flexible conduit for final termination of field control devices and instrumentation is permitted. They may not be longer than 36 inches in length, and may only transition to the smaller size junction boxes or condulets at the field device.

2.02 CONDUIT RACEWAYS

A. Galvanized Rigid Steel Conduit (GRS) shall be manufactured from mild steel, hot-dip galvanized inside and out, conforming to ANSI C80.1 and UL 6. Couplings shall be threaded type. Manufacturers shall be Allied Tube and Conduit, Wheatland Tube or approved equal.

B. PVC coated rigid steel conduit (PGRS) shall meet the requirements of GRS above. A PVC coating shall be bonded to the outer surface with a thickness not less than 40 mils. The inside surfaces and threads of the conduit shall be provided with a 2-mil urethane coating. PGRS shall be manufactured in accordance with UL-6, ANSO C80.1 and NEMA RN1. Manufacturers shall be Robroy Industries Perma-Cote or Plasti-Bond series, Thomas & Betts Ocal Blue or approved equal.

C. Liquidtight Flexible Conduit shall be constructed of a flexible galvanized metal core with a sunlight-resistant thermoplastic outer jacket. Conduit shall be manufactured• in accordance with UL 360. Flexible conduit in hazardous areas shall be rated for the Class, Division and Group in which its installed. Manufacturers shall be Anaconda Sealtite, Electriflex Liquatite or approved equal.

D. Rigid Nonmetallic Conduit: Rigid nonmetallic conduit shall be PVC Schedule 40 (PVC 40) or PVC Schedule 80 (PVC 80) and sunlight resistant. Conduit shall be approved for underground use and for use with 90°C wires, and shall conform to NEMA TC-2 and UL 651. Manufacturers shall be Carlon, Cantex or approved equal.

E. Fiberglass conduit shall be manufactured using the single circuit filament winding process. The resin shall be epoxy-based, with no fillers. All additives for increasing flame spread and lowering smoke density shall be halogen free. Conduit shall be manufactured in accordance with NEMA TC 14. Manufacturers shall be Champion Fiberglass, United Fiberglass or approved equal.

2.03 CONDUIT SUPPORTS

A. For indoor, dry locations, supports for individual conduits shall be galvanized malleable iron one-hole type with conduit back spacer. All other locations shall be Type 316 stainless steel.

B. For indoor, dry locations, supports for multiple conduits shall be hot-dip galvanized Unistrut or Superstrut channels, or equal. All associated hardware shall be hot-dip galvanized. All other locations shall be Type 316 stainless steel.

C. All channels, strut, threaded rods, nuts and clamps in corrosive areas shall be of epoxy resin reinforced fiberglass material. Provide Robroy, Superstrut, or equal.

2.04 FITTINGS

A. General
   1. For use with metallic conduit, provide cast and malleable iron fittings of the threaded type with 5 full threads.
   2. Fittings
      a. Provide fittings with neoprene gaskets and non-magnetic stainless steel screws.
      b. Attach covers by means of holes tapped into the body of the fittings.
      c. Covers for fittings attached by means of clips or clamps will not be accepted.
   3. Terminations
      a. In outdoor areas, terminate conduit in rain-tight hubs as manufactured by Myers, O.Z. Gedney, Appleton or approved equal.
      b. In other than outdoor areas, provide sealed locknuts and bushings.

B. Fittings for use with rigid steel shall be hot dipped galvanized steel or galvanized cast ferrous metal; access fittings shall have gasketed cast covers and be Crouse-Hinds Condulets, Appleton Unilets, or equal. Provide threaded-type couplings and connectors; set-screw type and compression-type are not acceptable.

C. Fittings for use with aluminum shall be cast aluminum with less than 0.40 percent copper content, and suitable for use with aluminum conduit. Manufactures shall be O.Z. Gedney, Appleton, Crouse-Hinds or approved equal.

D. Fittings for use with PVC-coated GRS conduit shall be PVC-coated that are the products of the same manufacturer as the conduit. Both male and female threads and internal surfaces shall contain a 2-mil urethane coating.

E. Fittings for use with rigid nonmetallic conduit shall be PVC and have solvent-weld-type conduit connections. Boxes shall be manufactured of PVC or fiberglass reinforced polyester (FRP). Manufactures shall be Carlon, Crouse-Hinds, Hoffman or approved equal. If such are not available, then the Specification for PVC coated galvanized rigid steel fittings shall apply.

F. Fittings for flexible conduit shall be Appleton Type ST, O.Z. Gedney Series 4Q, or approved equal.

G. Fittings for use with fiberglass conduit shall be fiberglass and as recommended by the conduit manufacturer.

H. Combination expansion-deflection fittings with internal grounding shall be installed where conduit movement is expected in more than one dimension, and where conduits transition out of structures in locations where differential settlement may occur. Combination expansion/deflection fittings shall be manufactured by Crouse-Hinds Type XJGD or approved equal.

I. Expansion fittings with internal grounding shall be installed wherever exposed raceway cross building expansion joints. Expansion fittings shall be Crouse Hinds Type XLGSA or approved equal.

J. Union couplings for conduits shall be the Erickson type and shall be Appleton Type EC, O.Z. Gedney 3-piece Series 4, or approved equal. Threadless couplings shall not be used.

K. Bushings:
   1. Bushings shall be the insulated type.
   2. Bushings for rigid steel conduit shall be hot dip galvanized insulated grounding type, O.Z. Gedney Type HBLG, Appleton Type GIB, or approved equal.

L. Conduit seals in hazardous areas shall have zinc electroplate and shall be Crouse-Hinds Type EYS or EZS; Appleton Type EYS, ESU, or EY series; or approved equal.

M. Conduit seals in areas where chlorine, ammonia, sulfur dioxide and/or hydrofluosilicic areas shall be Link Seal or approved equal.

2.05 BOXES

A. Boxes specified herein are for use with raceway systems only. Boxes used for housing electrical and instrumentation equipment shall be as described elsewhere in these Specifications.

B. NEMA 1 Areas: NEMA 1 terminal boxes, junction boxes, pull boxes, etc. shall be either sheet or cast malleable iron or aluminum depending on raceway material. Boxes shall be suitable for wall mounting or have feet where self-standing. Boxes shall have continuously welded seams and welds shall be ground smooth. Box bodies shall be flanged and shall not have holes or knockouts. Box bodies shall not be less than 14 gauge metal and covers shall not be less than 12 gauge metal. All boxes shall have hinged gasketed doors with quarter turn latches or 3-point latch (single operator) system on enclosures larger than 36 inches wide or 32 inches tall. Terminal boxes shall be furnished with terminal mounting straps and brackets. Terminal blocks shall be NEMA type, not less than 20A, 600V. Boxes

shall be Concept Series as manufactured by Hoffman Engineering Co. or approved equal.

C. NEMA 4X Areas: NEMA 4X terminal boxes, junction boxes, pull boxes, etc. shall be Type 316 stainless steel. Boxes shall be suitable for wall mounting or have feet where self-standing. Boxes shall have continuously welded seams and welds shall be ground smooth. Box bodies shall be flanged and shall not have holes or knockouts. Box bodies shall not be less than 14 gauge metal and covers shall not be less than 12 gauge metal. All boxes shall have hinged gasketed doors with quarter turn latches or 3-point latch (single operator) system on enclosures larger than 36 inches wide or 32 inches tall. Terminal boxes shall be furnished with terminal mounting straps and brackets. Terminal blocks shall be NEMA type, not less than 20A, 600V. Boxes shall be Concept Series as manufactured by Hoffman Engineering Co. or approved equal.

D. NEMA 7 Areas: Explosion-proof boxes shall be designed for the Class, Division and Group with which it is to be installed. Boxes shall have O-ring seals to meet NEM 4 requirements. Boxes shall be aluminum, with stainless steel hinged covers and stainless steel bolts. Boxes shall be as manufactured by Crouse Hinds Type EJB-N4, Appleton Electric, Adalet PLM or approved equal.

E. Boxes for use in chemically corrosive areas shall be of rigid PVC. Construction shall be the same as specified for NEMA 4X areas as specified above.

2.06 WIREWAYS AND AUXILIARY GUTTERS

A. General: Wireways shall consist of a prefabricated channel-shaped trough with hinged or removable covers, associated fittings, and supports. Straight sections shall not be longer than 5 feet. Separate power, control, signal and communications cables by grounded metallic dividers in wireways or run in separate wireways. Cross-sectional dimensions shall be as indicated on the Drawings. Fittings shall consist of elbows, tees, crosses, and closing plates as required.

B. Interior Locations: All components shall be constructed from sheet steel not less than 14 gauge and coated with a corrosion-resistant gray paint. Covers shall be held closed with hinges and clamps.

C. Exterior Locations: Wireway and associated fittings shall be NEMA rated for the area in which it is to be installed. Wireways shall be supplied with gasketed closing end plates and gasketed hinged covers.

D. Corrosive Locations: In corrosive locations provide enclosure type boxes for use as wireways. Enclosures and associated fittings shall meet NEMA 4X classifications and shall be manufactured from reinforced injection molded fiberglass or formed and welded stainless steel and shall have gasketed closing plates and hinged and gasketed covers with spring loaded latches.

E. Ground the steel and aluminum wireway bodies. Provide steel dividers with steel wireways or aluminum dividers with aluminum wireways, and ground by means of an individual grounding conductor.

F. Terminate conduits in all wet and damp locations with rain-tight hubs as manufactured by O.Z. Gedney, Myers or approved equal. In finished areas, provide sealed locknuts and bushings.

2.07 CONDUIT SEALANTS

A. Moisture Barrier Types: Sealant shall be a non-toxic, non-shrink, non-hardening, putty type hand applied material providing an effective barrier under submerged conditions.

B. Fire Retardant Types: Fire stop material shall be a reusable, non-toxic, asbestos-free, expanding, putty type material with a 3 hour rating in accordance with UL 1479. Provide products indicated by the manufacturer to be suitable for the type and size of penetration.

PART 3 - EXECUTION

3.01 CONDUIT, RACEWAY AND FITTING INSTALLATION

A. No wire shall be pulled until the raceway system is complete in all details; in the case of concealed work, until all rough plastering or masonry has been completed; in the case of exposed work, until the raceway system has been completed in every detail.

B. From pull point to pull point, the sum of the angles of all of the bends and offsets shall not exceed 270 degrees.

C. Coat threads with a conductive lubricant before assembly.

D. Provide joints that are tight, thoroughly grounded, secure and free of obstructions by use of a mandrel. Adequately ream the conduit in order to prevent damage to the wires and cables inside. Use strap wrenches and vises to install the conduit in order to prevent wrench marks on the conduit. Any conduit with wrench marks shall be replaced.

E. The ends of all conduits shall be tightly plugged to exclude dust and moisture during construction. Duxseal, or 3M seal spray shall be used in all applications. Plugging with tape is prohibited, even for short periods of time.

F. For power, control and signal circuits, provide conduit per Conduit Use Tables below, unless specifically indicated otherwise on the Drawings:
   1. Exception: For raceways leaving a building above grade and then going below grade, provide PVC-coated GRS from a point 3 feet above grade to a point 5 feet from the building wall.

G. Unless boxes have cast, threaded hubs, provide insulated type metallic grounding bushings for metallic conduits at all boxes. Bond together all conduits to provide continuity of the equipment grounding system. Size bonding conductor per NEC.

H. Provide flexible conduit in lengths of not more than 36 inches at connections to motors, valves and any equipment subject to vibration or relative movement. All flexible conduits, regardless of length or manufacturer rating, shall have a dedicated ground bonding conductor pulled through, whether it is included in the conduit fill schedules or not.

I. Conduits embedded in concrete floors on grade shall be installed between grids of reinforcing steel, or shall be encased below the floors, provided the concrete is thickened in a manner satisfactory to the Engineer. Installation of conduit below the bottom of this slab is not acceptable; embedding or encasing is required.

J. Damage to PVC coating of coated conduits or fittings shall be repaired with factory-approved PVC patching material to the original factory condition.

K. Install fiberglass conduit in accordance with the manufacturer's instructions. Connections between sections of conduit may be either glued or threaded, at the Contractor's option.

L. Underground Raceways: Slope all underground raceways to provide drainage; for example, slope conduit from equipment located inside a building to the handhole located outside the building. For additional requirements see Section 16402.

M. Conduit Supports: Properly support all conduits as required by the NEC. Run all conduits exposed except where the Drawings indicate that they are to be embedded in the floor slab, walls, or ceiling, or to be installed underground.

1. Exposed Conduits:

a. Support exposed conduits within 1 foot of any outlet and at intervals not exceeding NEC requirements; wherever possible, group conduits together and support on common supports. Support exposed conduits fastened to the surface of the concrete structure by one-hole clamps, or with channels. Use conduit spacers with one-hole clamps. Coordinate conduit locations with piping, equipment, fixtures, and with structural and architectural elements. Conduits attached to walls or columns shall be as unobtrusive as possible and shall avoid windows. Run all exposed conduits parallel to building lines. No diagonal runs will be accepted. Bends in parallel runs shall be concentric and shall be run straight and true.

b. Group together exposed conduits in horizontal runs located away from walls and support on trapeze hangers. Arrange such conduits uniformly and neatly. Trapeze hangers shall consist of channels of adequate size, suspended by means of minimum 3/8” diameter rods or other suitable means from the ceiling or from pipe hangers. Install such runs so as not to interfere with the operation of valves or any other equipment, and keep at least 6 inches clear of any pipe which may operate at more than 100°F. Treat cut surfaces or damaged ends with corrosion-resistant coatings such as "Devcon Z", prepared by Subox Coatings; "Galvanox Type I", prepared by Pedley-Knowles; or approved equal. Application shall follow manufacturer's recommendation.

N. All penetrations through walls into or out of corrosive locations, as defined in Section 16010 shall be made gas-tight. In concrete walls, pour concrete after the conduit is in place, if possible. If not, core drill concrete or CMU walls, install conduit and caulk around it with non-shrink grout. Install conduit seal in each conduit near the penetration.

O. All conduit penetrations through interior walls and floors shall be sealed with fire retardant type conduit sealant.

P. Conduit Identification: In each handhole, pullbox, cabinet, motor control center or other equipment enclosure, identify each conduit using the conduit number shown on the Drawings by means of a stamped brass tag affixed with stainless steel wire; where affixing a tag is not feasible, identify conduits by affixing a brass tag with epoxy or other approved method of stenciling to the wall or structure adjacent to the conduit terminus.

Q. Conduit Seals:
   1. Moisture Seals: Provide in accordance with NEC Paragraph 300.5(g).
   2. Gas Seals: Provide in accordance with NEC Paragraph 501.5.

R. Rigid PVC conduit shall be stored on a flat surface and shielded from the sun.

CONDUIT USE TABLE 1

	Inside Buildings						
	Exposed			**Concealed**			
Circuit Type	Standard	Corrosive	Hazardous	Above Suspended Ceilings	In Stud Walls	Embedded In Concrete	Slab On Grade
Power & 120 Vac Control	GRS	PVC Coated GRS	PVC Coated GRS	GRS	GRS	PVC-40	PVC-40
Signal	GRS	PVC Coated GRS	PVC Coated GRS	GRS	GRS	GRS	GRS
Fiber Optic Cable	GRS	PVC Coated GRS	PVC Coated GRS	GRS	GRS	PVC-40	PVC-40

CONDUIT USE TABLE 2

	Outside Buildings			**Transition**
Circuit Type	Exposed	Buried In Soil	Duct Bank Encased In Concrete	Within 5 Feet of Building
Power & 120 Vac Control	PVC Coated GRS or Fiberglass**	PVC Coated GRS	PVC-40	PVC Coated GRS
Signal	PVC Coated GRS, or Fiberglass**	PVC Coated GRS	GRS	PVC Coated GRS
Fiber Optic Cable	PVC Coated GRS, or Fiberglass**	PVC Coated GRS	PVC-40	PVC Coated GRS

* Provide ground wire sized per NEC requirements for all circuits.
** Aluminum and/or Fiberglass may be used in corrosive locations where environmental conditions warrant its use.

Notes:
1. Generally, the Conduit Use Tables apply.
2. Signal circuits are those subject to RF interference or induced current. MSPs, TSPs, telephone cable, coaxial cable, and manufacturer's cables specially designed for low level signals are all presumed to be part of signal circuits.
3. Provide fiberglass conduit where indicated on the Drawings.

3.02 WIREWAY INSTALLATION

A. Straight sections and fittings shall be solidly bolted together to be mechanically rigid and electrically continuous. Dead ends shall be closed. Unused conduit openings shall be plugged.

B. Wireways shall be supported every 5 feet.

C. Wireways and auxiliary gutters shall not contain wiring or control devices and shall not extend over 30 feet in length.

END OF SECTION

THIS PAGE INTENTIONALLY BLANK

SECTION 16120

LOW VOLTAGE WIRE AND CABLE

PART 1 - GENERAL

1.01 SCOPE OF WORK

A. Furnish labor, materials, equipment and incidentals necessary to install field wire and cable specified under this Section. Electrical work shall be in accordance with Specification 16010 – General Electrical Requirements.

B. Work shall include building wire, cable, wiring connections and terminations and modular wiring systems.

1.02 REFERENCE STANDARDS

A. American Society for Testing and Materials (ASTM):
   1. B3-74 Specification for Soft or Annealed Copper Wire
   2. B8-77 Specification for Concentric Lay Stranded Copper Conductors, Hard, Medium-Hard, or Soft
   3. B173-71 Specification for Rope Lay Stranded Copper Conductors Having Concentric Stranded Members

B. Insulated Cable Engineers Association (ICEA):
   1. S-66-524 Cross-Linked Thermosetting Polyethylene Insulated Wire and Cable

C. International Electrical Testing Association (NETA):
   1. ATS Acceptance Testing Specifications

D. National Electrical Manufacturers Association
   1. WC-3 Rubber Insulated Wire and Cable for the Transmission and Distribution of Electrical Energy
   2. WC-5 Thermoplastic-Insulated Wire and Cable for the Transmission and Distribution of Electrical Energy

E. Underwriters Laboratories (UL) Standards:
   1. 62 Flexible Cords and Fixture Wire
   2. 510 Insulating Tape
   3. 1063 Stranded Conductors for Machine Tool Wire

1.03 SUBMITTALS

A. Submit the following material or equipment data:
   1. Each type of cable and wire to be used.
   2. Cable and wire splices
   3. Wire markers

1.04 DELIVERY, STORAGE AND HANDLING

A. The Contractor shall protect all cable and wire from being damaged at all times.

B. Cable ends shall be protected from water entry in accordance with the manufacturer's recommended procedures. Cable ends shall not be left open in manholes or other locations subject to submergence. If the cable ends become submerged prior to splicing or termination, the cables shall be replaced in their entirety.

C. Cables shall be pulled into raceways in accordance with the manufacturer's requirements. Under no circumstances shall cable pulling tensions exceed the manufacturer's written instructions.

D. Pulling tensions on raceway cables shall be within the limits recommended by the cable manufacturer. Wire pulling lubricant, where needed, shall be UL approved.

PART 2 - PRODUCTS

2.01 CONDUCTORS

A. General: Conductors, include grounding conductors, shall be stranded copper. Aluminum conductor and/or solid conductor wire and cable will not be permitted. Insulation shall bear the UL label, the manufacturer's trademark, and identify the type, voltage, and conductor size. Conductors except flexible cords and cables, fixture wires, and conductors that form an integral part of equipment such as motors, controllers, and industrial control panels shall conform to the requirements of Article 310 of the National Electric Code, latest edition, for current carrying capacity. Flexible cords and cables shall conform to Article 400, and fixture wires shall conform to Article 402. Wiring shall have wire markers at each end.

B. Power and Control Conductors, 600 volts and Below:
   1. Solid copper wires shall be 600 volt Type XHHW, sizes #12 and #10 AWG for use with lighting and receptacle circuits only.
   2. Stranded copper wire for power circuits shall be 600 volt Type XHHW or RHW, Class B stranding, sizes #12 AWG and larger.
   3. Stranded copper wire for control circuits shall be 600 volt Type XHHW or RHW, Class B stranding, size #14 AWG.
   4. Control wires inside panels and cabinets shall be machine tool grade type MTW, UL approved, rated for 90 degrees C at dry locations.
   5. Fixture wire shall be 600 volt, silicone rubber insulated, 200°C, UL Type SF 2, with stranded copper conductors.
   6. Cords shall be 600 volt, 2 conductor plus ground, Type SO, hard service, of adequate length and with grounding type plug attached, rated in amperes as shown on the Drawings.
   7. Conductors for feeders as defined in Article 100 of the NEC shall be sized to prevent a voltage drop exceeding 3 percent at the farthest outlet of power, heating, and lighting loads, or combinations of such loads, and where the maximum total voltage drop on both feeders and branch circuits to the farthest connected load does not exceed 5 percent.
   8. Conductors for branch circuits as defined in Article 100 of the NEC shall be sized to prevent voltage drop exceeding 3 percent at the farthest connected load or combinations of such loads and where the maximum total voltage

drop on both feeders and branch circuits to the farthest connected load does not exceed 5 percent.

2.02 SPLICES AND TERMINATIONS OF CONDUCTORS

A. Splices:
   1. Wire and Cable Splicing Materials and Applications:
      a. For Lighting Systems and Power Outlets: Wire nuts shall be twist-on type insulated connectors utilizing an outer insulating cover and a means for connecting and holding the conductors firmly. They shall be UL listed and suitable for connecting two to four solid copper conductors of #14 or #12 AWG size or two or three #10 AWG solid copper conductors.
      b. All Equipment: Crimp type connectors shall be insulated type with nylon jacket, suitable for the size and material of the wires and the number of wires to be spliced and for use with either solid or stranded conductors. They shall be UL listed.
      c. Division 16 Equipment and Power Conductors: Bolted pressure connectors shall be suitable for the size and material of the conductors to be spliced. They shall be UL listed and of the split bolt or bolted split sleeve type in which the bolt or set screw does not bear directly on the conductor.
      d. All Equipment: Epoxy splice kits shall include epoxy resin, hardener, and mold, and shall be suitable for use in wet locations and hazardous locations.

B. Terminations:
   1. Low Voltage Terminations:
      a. Crimp type terminals shall be UL listed, self-insulating sleeve type, with ring or rectangular type tongue, suitable for the size and material of the wire to be terminated, and for use with either solid or stranded conductors.
      b. Terminal lugs shall be UL listed and of the split bolt or bolted split sleeve type in which the bolt or set screw does not bear directly on the conductor. Tongues shall have NEMA standard drilling.
      c. Crimp with manufacturer recommended ratchet-type tool with calibrated dies. Hand crimping tools are not acceptable.

C. Tape used for splices and terminations shall be compatible with the insulation and jacket of the cable and shall be of plastic material. Tape shall conform with UL 510. Varnished cambric, rubber and thermoplastic tape shall be used for all split-bolt terminations.

D. Wire markers shall be heat shrink type (Raychem; T&B; or equal). Wire identification numbers shall be permanently imprinted on the markers. In locations which are not practical for heat shrink type labels, such as conduit bodies and small pull boxes, machine-printed, adhesive backed wire markers shall be used. Markers shall be custom-printed with the full identification string. Individual character markers and clip-on wire markers are not acceptable.

PART 3 - EXECUTION

3.01 CONDUCTOR INSTALLATION

A. The Contractor shall provide, terminate and test all power, control, and instrumentation conductors.

B. The Contractor shall, as a minimum, provide the number of control wires listed in the conduit schedule or on the Contract Drawings. Excess wires shall be treated as spares for future use.

C. Conductors shall not be pulled into any raceway until raceway has been cleared of moisture and debris.

D. Wire in panels, cabinets, and wireways shall be neatly grouped using nylon tie straps, and shall be neatly fanned out to terminals.

E. Single conductor cable in cable trays shall be No. 1/0 or larger and shall be of a type listed and marked for use in cable trays. Tray cable smaller than 1/0 shall be multi-conductor, with outer jacket.

F. Provide the following types and sizes of conductors for the uses indicated for 600 volts or less:
   1. Solid Copper, Sizes #12 and #10 AWG: As shown on the Drawings for circuits for receptacles, switches and light fixtures with screw-type terminals.
   2. Stranded Copper, Size #14 AWG and Larger, Individual Conductors or CC: As shown on the Drawings for the control of motors or other equipment. Size #14 shall not be used for power supplies to any equipment.
   3. Stranded Copper, Sizes #12 AWG and Larger: As shown on the drawings for motors and other power circuits.
   4. Stranded Copper, #6 AWG and Larger.
   5. Fixture Wire: For connections to all fixtures in which the temperature may exceed the rating of branch circuit conductors.

G. Color Coding: All wire shall be coded with specific colors infused in the conductor insulation at the time of manufacture. If a conductor is specified in a gauge not available with integrally colored insulation, it shall be marked by the Contractor at the time of installation using colored electrical coding tape or an approved marking paint. Where tape or paint is used as the conductor identification system, it shall clearly distinguish the conductor over its entire exposed length in all junction boxes, manholes, conduit bodies, or other accessible intermediate locations, and at every termination. Wiring shall conform to the following wiring color code, unless part of a proprietary cable assembly such as a manufacturer-specific cable which uses a special connector:

SYSTEM	CONDUCTOR	COLOR
120/240 volt AC, 1-Phase, 3 Wire	Neutral Line 1 Line 2	White Black Red
120/208 volt AC, 3-Phase, 4 Wire;	Neutral Phase A Phase B Phase C	White Black Red Blue

SYSTEM	CONDUCTOR	COLOR
277/480 volt AC, 3-Phase 4 Wire	Neutral Phase A Phase B Phase C	Grey Brown Orange Yellow
All Systems	Earth, System, or Equipment Ground	Green Insulation, Green w/ Yellow Tracer, or Bare Conductor
120 volt AC Control Power Circuits (In field or in Control Cabinets)	Neutral Line 1 Line 2	White Black Red
120 volt AC UPS-derived Control Power (secondary side)	Neutral Line	White w/ Red Tracer Red w/ White Tracer
24 volt AC Control Power Circuits (In field or in Cabinets)	Neutral Line	White or Grey, w/ Yellow Tracer Brown
12 or 24 volt DC Control Wiring (PLC Discrete I/O, etc.)	DC Negative DC Positive DC Switched (DI/DO)	Yellow Orange Blue
120 volt AC Control Wiring inside or outside cabinets to/from PLC Discrete I/O	Common or Neutral 120 VAC discrete inputs 120 VAC relay or discrete outputs	White or Grey, w/ Blue Tracer Blue Red
Instrumentation Twisted-shielded Cabling (PLC Analog I/O @ 4-20mA, or 1-5 volt DC, etc.) Process Signals to/from Transmitters, Analyzers, etc.	Negative Polarity Positive Polarity (1st Conductor) Positive Polarity (2nd Conductor) Shield Drain Wire	Black White (or clear) Red Bare Conductor, or covered w/ heat-shrink tubing of a unique color
Instrumentation wiring in cabinets (PLC Analog I/O from field terminations of shielded cables).	PLC Analog Input Connections PLC Analog Output Connections	Grey Brown

H. Exercise care in pulling wires and cables into conduit or wireways so as to avoid kinking, putting undue stress on the cables or otherwise abrading them. No grease will be permitted in pulling cables. Only soapstone, talc, or UL listed pulling compound will be permitted. The raceway construction shall be complete and protected from the weather before cable is pulled into it. Swab conduits before installing cables and exercise care in pulling, to avoid damage to conductors.

I. Wrap all cables in manholes with fireproofing tape. Extend tape 1-inch into ducts.

J. Cable bending radius shall be per applicable code. Install feeder cables in one continuous length unless splices are favorably reviewed.

K. Provide an equipment grounding conductor, whether or not it is shown on the Drawings, in any flexible conduit or any raceway in which all or any portion of a run consists of non-metallic duct or conduit. For flexible conduit, an external bonding jumper is an acceptable alternative.

L. In panels, bundle incoming wire and cables, No. 6 AWG and smaller, lace at intervals not greater than 6 inches, neatly spread into trees and connect to their respective terminals. Allow sufficient slack in cables for alterations in terminal connections. Perform lacing with plastic cable ties or linen lacing twine. Where plastic panel wiring duct is provided for cable runs, lacing is not necessary when the cable is properly installed in the duct.

M. For cables crossing hinges, utilize extra flexible stranded wire, make up into groups not exceeding 12, and arrange so that they will be protected from chafing and excess flexing when the hinged member is moved.

3.02 CONDUCTOR SPLICES AND TERMINATIONS

A. Splices: Install all conductors without splices unless necessary for installation, as determined by the Engineer. Splices, when permitted, and terminations shall be in accordance with the splice or termination kit manufacturer's instructions. Splice or terminate wire and cable as follows:

1. Watertight Splices: Splices in concrete pullboxes, for any type of cable or wire, shall be watertight and rated for continuous submergence. Make splices in low voltage cables using epoxy resin splicing kits rated for application up to 600 volts.

B. Terminations:

1. Terminate stranded #14 wire using crimp type terminals where not terminated in a box lug type terminal. Terminals must be coordinated with type of terminal board where provided.
2. Excess control wire shall be long enough to terminate at any terminal block in the enclosure, be properly taped, be identified with origin and be neatly coiled.

3.03 CONDUCTOR IDENTIFICATION

A. Except for interior lighting and receptacle circuits, identify each wire or cable at each termination and in each pullbox, junction box, handhole, and manhole using numbered and lettered wire markers. All electrically common conductors shall have the same number. Each electrically different conductor shall be uniquely numbered. Identify panelboard circuits using the panelboard identification and circuit number. Identify motor control circuits using the equipment identification number assigned to the control unit by the motor control center manufacturer and the motor control unit terminal number. Identify other circuits as shown in the circuit schedule or as favorably reviewed by the Engineer.

B. Conductors between terminals of different numbers shall have both terminal numbers shown at each conductor end. The terminal number closest to the end of the wire shall be the same as the terminal number.

3.04 FIELD TESTS

A. Refer to Specification 16950 – Electrical Tests for all cable testing requirements.

END OF SECTION

THIS PAGE INTENTIONALLY BLANK

SECTION 16124

SIGNAL CABLE

PART 1 - GENERAL

1.01 SECTION INCLUDES

A. Provisions: Applicable provisions of Section 16010 become a part of this Section as if repeated herein.

1.02 REFERENCE STANDARDS

A. American National Standards Institute (ANSI)/Telecommunications Industry Association (TIA):
   1. 568-C.2 Balanced Twisted-Pair Telecommunications Cabling and Components Standards

B. American Society for Testing and Materials (ASTM):
   1. B8-11 Specification for Concentric-Lay-Stranded Copper Conductors, Hard, Medium-Hard, or Soft

C. Institute of Electrical and Electronic Engineers (IEEE):
   1. 1143 Shielding Practice for Low Voltage Cables, Guide on

D. Insulated Cable Engineers Association (ICEA)
   1. S-73-532 Standard for Control, Thermocouple, Extension, and Instrumentation Cable

E. National Fire Protection Association (NFPA):
   1. 262 Standard Method of Test for Flame Travel and Smoke of Wires and Cables for Use in Air-Handling Spaces

F. Underwriters Laboratories Incorporated (UL):
   1. 13 Standard for Power-Limited Circuit Cables
   2. 83 Thermoplastic-Insulated Wires and Cables
   3. 444 Communications Cables
   4. 1666 Standard for Test for Flame Propagation Height of Electrical and Optical-Fiber Cables Installed Vertically in Shafts

1.03 SUBMITTALS

A. Submit material or equipment data in accordance with the Product Information category of the General Conditions and the submittal requirements of Section 16010.

PART 2 - PRODUCTS

2.01 INSTRUMENTATION CABLE

A. Provide UL listed, twisted pair instrumentation Tray Cable (TC) conforming to ICEA S-73-532, and suitable for transmission of 4-20mA analog, low voltage signals.

B. The cable shall be two-conductor (2/C), three-conductor (3/C), four-conductor (4/C), or more as indicated on the Drawings.

C. Each conductor in the cable shall be #16 AWG 7x24 stranded bare copper, or as indicated on the Drawings.

D. Conductor insulation: Polyvinyl Chloride/Nylon

E. Shield: Aluminum Foil, 100 percent coverage

F. Drain wire: #18 AWG, stranded, tinned copper

G. Jacket material: Polyvinyl Chloride, minimum thickness 0.047 inches.

H. Insulation shall be rated at 600 volts.

I. Temperature rating: UL dry, 90 degrees C; UL web, 75 degrees C

J. Instrumentation cable installed in underground conduits shall be rated as suitable for the application.

K. Instrumentation cable shall be Belden 3090A, 3091A, or approved equal.

2.02 ETHERNET (TCP/IP) CABLE

A. Industrial use, shielded:
   1. Provide UL listed, Category 6 shielded twisted pair (STP) Ethernet cable conforming to ANSI/TIA-568-C.2 and suitable for use in electrically noisy environments.
   2. Conductors: 4 pairs of #23 AWG solid bare copper
   3. Conductor insulation: Polypropylene, minimum thickness 0.01 inches
   4. Inner jacket material: Polyvinyl Chloride, minimum thickness 0.02 inches
   5. Shield: Aluminum Foil, 100 percent coverage
   6. Drain wire: #24 AWG, stranded, tinned copper
   7. Outer jacket material: Industrial grade Polyvinyl Chloride, factory marked at regular intervals indicating verifying organization and performance level. Minimum thickness 0.03 inches.
   8. Insulation shall be 300 volt class.
   9. Insulation temperature range: -25 to +75 degrees C
   10. Electrical Characteristics: Cable shall have a maximum attenuation of 20 dB per 100 meters at 100 MHz and 33 dB per 100 meters at 250 MHz
   11. Terminations/Connectors: Cables shall terminate in ruggedized Category 6 RJ-45 connectors, or at Category 6 punch down blocks at both ends. Connector body shall be diecast zinc alloy, and nickel plated for corrosion resistance. Contacts shall be gold plated.
   12. Cable shall be riser-rated for flammability in accordance with UL 1666, not suitable for use in plenum spaces.
   13. Ethernet cable installed in underground conduits shall be rated as suitable for the application.
   14. Industrial, shielded network cable shall be Belden 7953A or approved equal.

PART 3 - EXECUTION

3.01 CABLE INSTALLATION

A. Signal cable shall be installed by personnel who have a minimum of 3 years' experience in terminating and splicing shielded twisted pair cables and coaxial cables.

B. Adequate care shall be exercised by the installers to prevent cable damage or sheath distortion. Bending radius shall not be less than 10 times the cable outside diameter.

C. Raceways shall be swabbed before installation of cable to remove moisture and debris.

D. Cables shall be continuous from initiation to termination without splices except where specifically indicated.

E. Cable shielding shall be grounded at one end only of the cable. Bonding shall be to a single ground point only. Bonding from cable to cable in multiple run installations shall not be permitted.

F. Heat shrinkable sleeving shall be installed on all cables to insulate shielding at the ungrounded cable terminations.

G. Signal cable shall not be run in the same raceway with power and control wiring except where specifically indicated.

H. Where installed in control consoles containing power circuits, cables shall be routed a minimum of 2 inches distant. Color coding shall be strictly observed throughout the installation.

I. Cable in panels, cabinets, and wireways shall be neatly grouped using nylon tie straps, and shall be fanned out to terminals.

J. For telephone cables, provide station cable to outlets. Use backbone cable for connection between telephone patch panels. Allow at least 25% spare capacity between patch panels.

K. Manufacturer's cable pulling tension shall not be exceeded.

L. Pulling lubricant shall be UL approved.

3.02 CONDUCTOR SPLICES AND TERMINATIONS

A. Splices: Install all conductors without splices unless necessary for installation, as determined by the Engineer. Splices, where approved, and terminations shall be in accordance with the splice or termination kit manufacturer's instructions.

B. Terminations:
   1. Crimp-type terminals shall be UL listed, self-insulating, sleeve type with ring or rectangular tongue, suitable for size and material of the wire to be terminated and for use with either stranded or solid wire. Spade type lugs are acceptable with telephone cable systems only.
   2. Crimp with manufacturer's recommended ratchet-type tool with calibrated dyes. Hand crimping tools are not acceptable.
   3. Coaxial cable and connectors shall be terminated in accordance with the manufacturer's instructions.

3.03 CONDUCTOR IDENTIFICATION

A. Identify each wire or cable at each termination, in each pullbox, and in each handhole using numbered and lettered wire markers. All electrically common conductors shall have the same number. Each electrically different conductor shall be uniquely numbered. Identify panelboard circuits using the panelboard identification and circuit number. Identify motor control circuits using the equipment identification number assigned to the control unit by the motor control center manufacturer and the motor control unit terminal number. Identify other circuits as shown in the circuit schedule or as favorably reviewed by the Engineer.

B. Conductors between terminals of different numbers shall have both terminal numbers shown at each conductor end. The terminal number closest to the end of the wire shall be the same as the terminal number.

3.04 FIELD TESTS

A. Perform testing in accordance with Section 16950 – Electrical Tests.

END OF SECTION

SECTION 16205

STANDBY DIESEL ENGINE-GENERATOR SETS

PART 1 - GENERAL

1.01 DESCRIPTION

A. Provisions: Applicable provisions of Section 16010 become a part of this Section as if repeated herein.

B. Work Included: Furnish all labor, materials, equipment, services, and incidentals required to provide a complete and operable standby diesel engine-generator system. Materials and equipment shall be new and of best quality, as specified and shown on the Drawings. The work shall include, but not be limited to:
   1. Standby diesel engine-generator set (hereinafter called engine-generator) complete with all appurtenances. Unit shall be complete with all standard accessories for the manufacturers and models listed in Paragraph 2.01G in addition to those additional and special features described.
   2. Fuel system including UL Listed 142 under-belly tank with leak detection and low-level signals.
   3. Automatic starting and shutdown controls, starting batteries, battery rack, charger, and generator controls.
   4. Exhaust system complete with flexible connectors, silencer, exhaust piping, and insulation and supports for silencer and exhaust pipe.
   5. Radiator mounted load bank and sound attenuated exhaust to existing acoustic louver.

1.02 QUALITY ASSURANCE

A. Comply with all rules and regulations of authorities having jurisdiction over work specified herein.

B. Permits and inspection shall be in accordance with City General Provisions. Contractor shall be responsible for obtaining and paying permit fees with San Diego Air Pollution Control District (APCD) for an Authority to Construct and Permit to Operate a Stationary Source for the standby engine generator.

C. The Drawings are diagrammatic. Size of equipment and pipes and general method of routing are shown, but it is not intended to show every offset and fitting nor every structural difficulty that may be encountered.

1.03 REFERENCE STANDARDS

A. ASTM International (ASTM) Publication:
   1. A386 Zinc Coating (Hot-Dip) on Assembled Steel Products, Specifications for

B. Federal Communications Commission (FCC):
   1. Part 15 Subpart B Unintentional Radiators

C. National Electrical Manufacturers Association (NEMA) Publications:
   1. ICS-1 General Standards for Industrial Controls and Systems
   2. ICS-2 Standards for Industrial Control Devices, Controllers and Assemblies

3. 250 Enclosures for Electrical Equipment (1,000 Volts Maximum)
4. MG 1 Motors and Generators

D. National Fire Protection Association (NFPA) Publications:
1. 30 Flammable and Combustible Liquid Code
2. 37 Standard for the Installation and Use of Stationary Combustion Engines and Gas Turbines

E. Underwriters Laboratory (UL) Standard:
1. 142 Steel Aboveground Tanks for Flammable and Combustible Liquids
2. 508 Electric Industrial Control Equipment
3. 2200 Stationary Engine Generator Assemblies

1.04 SUBMITTALS

A. Submit material or equipment data in accordance with the Product Review category of the General Conditions and the submittal requirements of Section 16010 .

B. Shop Drawings: Submit shop drawings and include the following information:
1. Floor layout drawings for the engine-generator, with location dimensions for all connections including electrical, fuel, and exhaust, with base dimensions and weights.
2. Composite assembly drawing of engine-generator showing location of all auxiliary equipment, dimensions and weight.
3. Front, rear, and both side elevations of the complete engine-generator unit assembly, including radiator exhaust air duct and radiator mounted load bank.
4. Specification sheets with performance data and engineering details adequate to determine compliance with Specifications of:
   a. Engine (including engine cranking amperes at 20°F)
   b. Radiator
   c. Generator and voltage regulator
   d. Base assembly, housing, and vibration isolation mounts
   e. Control panel with all components
   f. Jacket water heater
   g. Day tank assembly
   h. Engine-mounted fuel pump
   i. Governor
   j. Battery system
   k. Exhaust silencer
   l. Roof thimble (for exhaust pipe)
   m. Battery charger
   n. Load Bank
   o. Alarms
5. Electrical interconnection diagram including generator, voltage regulator, control panel, circuit breaker, batteries, jacket heater, switches load bank and accessories.
6. Complete identification of all components and materials by manufacturer, model number, rating and material.
7. Complete engine and generator voltage dip and load data. Provide calculations to show compliance with specified performance requirements specifically prepared for this project.

8. Single-line generator power diagrams.
9. Wiring diagrams for generator excitation and regulation circuits, alarm circuits, and instrument circuits.
10. Elementary control diagram and separate wiring diagram for automatic engine starting and protective shutdown controls. These diagrams shall show a wire number for every control circuit wire. Include a comprehensive description of operation.
11. Complete surface preparation and finish data for the engine, generator, cabinet, panels, frame, housing, and other surfaces.
12. Detailed description of factory testing program, testing equipment, reporting procedure, and criteria for test passing or failing.
13. Detailed description of field testing program, including description of tests, testing equipment, reporting procedure, and criteria for test passing or failing. (This may be a separate submittal made at a later time, but not later than 30 days before the actual tests.)
14. Check the shop drawing submittal to verify that all the details and data required above are included. If the submittal is not complete, it will not be reviewed and will be returned for completion.
15. Submit seismic design certifications and anchorage calculations for the genset and subbase fuel tank that meet the seismic requirements defined by Specification 01190 and Structural S1.

C. Factory Test Report: After fabrication and testing but before shipping from the factory, submit results of the factory test for review. Do not ship any generator units until the factory test results have received favorable review.

D. Field Test Report: Submit field test report for review within 15 days of the time of completion of the field test.

E. Manual: Provide in conformance with Section 16010.

PART 2 - PRODUCTS

2.01 ENGINE-GENERATOR SET

A. General: The engine-generator shall be a factory fabricated and assembled package of new and current equipment, and shall consist of engine, generator, controls, and other accessories as specified and as may be required for a complete and operable assembly, capable of automatic startup and shutdown. Elevation of installation is 100 feet with ambient temperatures between 0 and 77F. Install the engine-generator permanently on a welded steel base for anchoring to a subbase fuel tank.

B. The engine-generator and subbase fuel tank shall have only one source of supply and responsibility. The assembly and complete installation shall comply with the National Electrical Code and Title 8 of the California Code of Regulations.

C. Ratings and Performance: The unit shall be capable of providing power for motors, lighting, and controls.
1. The engine-generator shall be capable of starting and operating the sequentially started loads as follows:
   a. With an initial load (listed in Paragraph 2.01G) on the generator unit, the engine-generator shall be capable of starting and running the additional

electrical load as listed in Paragraph 2.01G. The instantaneous voltage dip shall not exceed the percentage listed in Paragraph 2.01D.

b. The generator will not be required to parallel any other source.

c. The generator shall provide the voltage, phase and number of wires as listed in Paragraph 2.01G. The engine-generator speed shall not exceed that listed in Paragraph 2.01G. The Contractor shall submit detailed calculations on voltage dip characteristics on this specific application. Generalized catalogs are not sufficient to meet this requirement. The voltage dip characteristics shall also be confirmed in the field. Failure of this field test shall constitute evidence that the equipment has not met the voltage dip criterion. The equipment shall be replaced or modified until the installed equipment operates successfully as specified herein. Under no circumstances will equipment with a voltage dip greater than specified be acceptable.

D. Engine:

1. Type: The engine shall be for operation on No. 2 diesel fuel, four cycle, water-cooled, while operating with a nominal speed of 1800RPM. The engine will utilize in-cylinder combustion technology, as required, to meet applicable EPA non-road mobile regulations and/or EPA NSPS rule for stationary reciprocating compression ignition engines. Additionally the engine shall comply with State Emission regulations at the time of installation/commissioning. Actual engine emission values must be in compliance with applicable EPA emission standards per ISO 8178-D2 Emissions Cycle at specified ekW/bHP rating. The engine shall include a mounted radiator with duct flange, pusher-type fan. Provide engine speed isochronous electric governor to control engine speed within 0.25% from no load to full rated output and water pump.

2. Engine Controls:

a. Normal Controls: Provide a complete automatic engine start-stop control which shall start engine on closing remote contact and initiate engine cool down and shutdown on opening contact. The engine controls shall also include a three-position selector switch with the following positions: RUN/STOP/AUTOMATIC; the STOP position shall shut the engine down immediately, bypassing the cool down cycle.

b. Safety Shutdowns: Provide a cranking limiter to open the starting circuit in approximately 45 to 60 seconds if the engine fails to start in that time. Provide sensing elements to shut the engine down immediately when conditions reach a level deemed harmful to the unit. Provide an individual signal light and alarm terminals for each condition. Provide an alarm relay and horn. Safety shutdowns shall include:

1) Low lubricating oil pressure
2) High water temperature
3) Overspeed
4) Overcrank
5) Low water level
6) Low cooling water flow
7) Any additional conditions standard with the manufacturer.

c. Alarm Outputs: Provide one set of normally open and one set of normally closed dry (i.e., non-energized) output contacts for connections to the Plant alarm system as a "Composite Generator Alarm." The contacts shall be actuated for any one or more of the

shutdown conditions or for overcurrent trip of the generator main breaker; provide alarm signal light for such overcurrent trip. The contacts shall remain activated during the entire period of the abnormal condition, and reset shall be automatic. The contacts shall be wired to a terminal strip inside a closed, gasketed box. See the Drawings for external alarm system connections.

3. Batteries: Provide starting batteries mounted in attached battery racks with non-conducting floor. Guarantee the batteries for one year or more and provide a new battery for any battery found defective within the guarantee period. Mount batteries above the concrete floor level. Batteries shall be the lead-acid storage type, selected to provide engine break-away current for one second at a voltage of 0.85 volts per cell at a battery temperature of 20 degrees F. Engine shall be at the temperature maintained by the jacket heater for a 20 degrees F ambient.
4. Battery Charger: Provide a current limiting charger to automatically recharge the batteries. The charger shall be dual charge rate with automatic switching to boost the rate when required. The battery charger shall be mounted to the genset package. The charger shall operate on 120 Vac. Charger output shall be current limited to 140% of rated current.
5. Provide an exhaust silencer of the critical silencing type capable of not less than 30 dBA attenuation, sized by the engine manufacturer to provide silencing without harmful back-pressure. Install silencer to match existing installation to the extent possible and as shown on the Drawing Details. The silencer shall be mounted such that its weight is not being supported by the engine nor will the exhaust system growth due to thermal expansion be imposed on the engine. Thermally insulate silencer and exhaust piping to match or exceed current installation.
6. Jacket Water Heater: Provide single-phase jacket water heater with one thermostat. Heater shall be rated 120V and 2500VA maximum to match current field conditions.
7. Exhaust Stack Pipe
    a. Description: The system will be comprised of a flexible coupling at turbocharger, piping to connect flexible coupling to silencers, piping to carry gases through a rain cap. The silencer, stack, and exhaust piping shall be sized to insure that measured exhaust back pressure does not exceed the manufacturer minimum or maximum limitation.
    b. Materials:
        1) Manufacturer to furnish black steel standard weight (Schedule 40) discharge pipe conforming to ASTM A53 grade A or ASTM A120 for engine exhaust system.
        2) Flexible metal connections for junctions between turbocharger, piping and silencer.
    c. Rain cap shall be all ASTM 304L Stainless steel or higher grade with adjustable counter weights.
8. Fuel Supply System:
    a. The fuel system shall be integral with the engine. In addition to the standard fuel filters provided by the engine manufacturer, there shall also be installed a primary fuel filter/water separator in the fuel inlet line to the engine. All fuel piping shall be black iron or flexible fuel hose rated for this service. No galvanizing piping will be permitted. Flexible fuel lines shall be minimally rated for 300 degrees F and 100 PSI.

b. Sub-base Fuel Tank:
   1) The subbase fuel tank shall be double-walled, UL 142, custom made and be an integral part of the genset. Capacity shall match or exceed the existing tank capacity of 336 gallons, but shall not exceed 660 gallons.
   2) Contractor shall be aware of the existing equipment pad constraints limit the length and width of the tank to fit on the existing equipment pad of 4'-8" wide and 10'-11" long.
   3) The height of the existing entrance is 12'-0", so the combined height of the generator and subbase fuel tank must be able to be installed within this opening without modifications to the opening.
   4) Tank shall incorporate the following appurtenances:
      a) Fuel level sight gauge
      b) Fuel tank high-level and low-level switches with dry output contacts for remote indication
      c) Fill line extended through the enclosure and provided with a lockable cap.
      d) 2-inch normal vent riser for primary tank and 4-inch emergency vent for both the primary and containment tanks. Normal vent riser shall be piped outside of building and shall terminate not less than 12 feet above surrounding grade.
      e) Drain petcock valve.
      f) Fuel strainer.
      g) Fuel tank overfill protection alarm: Provide a sensor with an audible alarm that indicates when fuel level is at approximately 85% capacity. OMNTEC Manufacturing L2PD4 panel and L-1 sensor, or equal
      h) Fuel Leak Detection System: Provide a fuel leak detection system to monitor any fuel leaks from the fuel tank. The system shall be fully automatic and shall include, but not be limited to, sensor, cable, visual alarms, remote test and self-diagnostic trouble alarm, intrinsic safety barrier, auxiliary relay output for input to the PLC remote alarm and false alarm suppression. Unit shall be FM (Factory Mutual) approved. Electrical service shall be 120 volt, 60 Hz.

9. Provide diesel exhaust treatment system conforming to CARB orders (CCR Title 17, Section 93115)
10. Starting System: A DC electric starting system with positive engagement shall be furnished. The motor voltage shall be as recommended by the engine manufacturer.
11. Initial Fills:
    a. Provide crankcase oil.
    b. Provide initial fill of engine coolant as recommended by the manufacturer to protect engine cooling system to a minimum temperature of 20 degrees F, and as required to inhibit corrosion in the cooling system.
    c. Fuel Oil: Supply the fuel oil for testing of operation.

E. Generator:
   1. The synchronous generator shall be single bearing, self-ventilated, drip-proof design in accordance with NEMA MG 1 and directly connected to the engine flywheel housing with flex coupling. The generator shall meet the

performance class G2 of ISO 8528. The excitation system shall be brushless construction.

2. Generator Performance:
   a. Frequency regulation shall be isochronous ±0.25% from no-load to rated load.
   b. Steady-state, automatic voltage regulation shall maintain generator output voltage within ±0.5% for any constant load between no load and full load. Voltage regulator shall include electronic voltage buildup, over-excitation protection, shall limit voltage overshoot on startup and shall be environmentally sealed. Voltage regulation shall be selectable to be either volts per hertz or by load adjustment module.

c. The maximum allowable short term voltage dip, looking at waveform peaks on an oscillograph, shall not exceed a total of 30%. Preload and step load conditions are tabulated in Paragraph 2.01G.

3. Generator Control Panel: The panel will be shop wired and tested and separately mounted as shown and shall be UL labeled per UL 891. Provide panel lighting and manual reset control power circuit breaker. Control power shall be 120 Vac. Provide the following relays and instruments: frequency meter, running time meter, ac voltmeter, ac ammeter, voltmeter switch with off position, ammeter switch with off position, kilowatt transducer with 4-20 mA output for remote indication, synchronizing check relay (ANSI #25), undervoltage/phase-sequence relay (ANSI #27/47), directional power (anti-motoring) relay (ANSI #32), instantaneous and time-overcurrent relay (ANSI #50/51), overvoltage relay (ANSI #59), over and under frequency relays (ANSI #81O and #81U), lockout relay (ANSI #86), solid state voltage and frequency controllers, and line synchronizer circuit. Meters shall be 250-degree circular switchboard type, 1% accuracy class.

4. Generator Main Power Circuit Breaker: Main power circuit breaker shall be molded case, 3-pole, 480 V, 600-amp trip, 65,000 amp interrupting capacity and 100% rated. The UL Listed breaker shall be housed in a NEMA 1 gasketed enclosure mounted on the generator set and isolated from vibrations induced by the generator set. Mechanical lugs shall be provided to terminate two sets of 350MCM cables and 1#1GND connection.

5. Provide exerciser and all appurtenances for periodic automatic running of the engine-generator set.

F. Vibration Isolation System for Engine-Generator Unit:
   1. Isolation system shall be a combination reinforced concrete inertia pad supported on earthquake-restrained spring vibration isolators.
   2. Vibration isolation shall be greater than 95%.
   3. Vibration isolation system shall be Korfund Dynamics Corporation Series L Isolators supporting a Type RCPF base frame, Mason Industries Type KSL Base supported on SSLFH Mounts with adjustable vertical limit stops, or equal.

G. Engine-generator and accessories manufacturers, model numbers and sizing data:
   1. Engine Manufacturer or equal:
      a. Caterpillar C9
      b. Kohler 250REOZJE
      c. Minimum standby rating: 250kW (at 0.8 power factor)
   2. Voltage dip characteristics:
      a. Initial load: 15 kVA, 08. pf.

b. Additional electric motor load to be started:
   1) Motor size: 125HP
   2) Phase: 3
   3) Motor Code: G
   4) Special features: Reduced Voltage starting.
c. Additional electric motor load to be started:
   1) Motor size: 125HP
   2) Phase: 3
   3) Motor Code: G
   4) Special features: Reduced Voltage starting.

3. Generator output:
   a. Voltage: 480Y/277
   b. Phase: 3
   c. Wires: 4
   d. Maximum engine speed: 1,800.

2.02 automatic load bank

A. Ratings:
   1. The total capacity of the load bank shall be rated 100 kW at 480 Volts, 3-Phase, 3-Wire, 60 Hertz, 120 Amps per Phase at unity Power Factor.
   2. The load step resolution shall be a nominal 20% of the load bank rating.
   3. The load bank shall be designed for continuous duty cycle operation with no limitations.

B. Material and Comstruction:
   1. The load bank shall be suitable for installation on the generator radiator core, within the radiator exhaust ductwork of the generator set.
   2. Due to the high radiator exhaust from the generator, the load bank shall be constructed of heavy gauge of aluminized steel per ASTM A463. Aluminized steel provides superior corrosion protection and extended service life, with a better tolerance to high heat exposure compared to the more common galvanized steel.
   3. The main input load bus, load step relays, fuses and control relays shall be located within the load bank enclosure.

C. Resistive Load Elements:
   1. Load elements shall be ASCO Helidyne, helically wound chromium alloy rated to operate at approximately ½ of maximum continuous rating of wire. Elements must be fully supported across the entire length within the air stream by segmented ceramic insulators on stainless steel rods. Element supports shall be designed to prevent a short circuit to adjacent elements or to ground.
   2. The change in resistance due to temperature shall be minimized by maintaining conservative watt densities.
   3. The overall tolerance of the load bank shall be –0% to +5% kW at rated voltage. A –5%, +5% rating allows the load bank to deliver less than rated kW and shall not be used. The load bank must deliver full rated kW at rated voltage.
   4. Sealed wire type elements (which have the internal resistance wire totally enclosed) prevent internal cooling of the element wire and shall not be used.

D. Cooling: The engine generator shall be equipped with fans capable of cooling the load bank. Generator manufacturer shall coordinate with the load bank manufacturer and size fans accordingly.

E. Protective Devices:
   1. An over-temperature switch shall be provided to sense the load bank exhaust. The switch shall be electrically interlocked with the load application controls to prevent load from being applied in the event of an over temperature condition.
   2. To provide for major fault protection, branch fuses shall be provided on all three phases of switched of all load steps. Branch fuses shall be current limiting type with an interrupting rating of 200K A.I.C.
   3. The exterior of the load bank shall have appropriate warning/caution statements on access panels.

F. Control System: An Automatic Load Controller shall be provided for maintaining a minimum load on the generator set. The controller shall monitor the connected downstream loads and shall automatically add or subtract load steps in response to building load changes as to maintain a minimum load level on the generator set. The controller includes an initial time-delay circuit, and automatic time delayed load step application circuit. A remote contact closure is required for activation and transfer of control. A separate current transformer shall be supplied loose for mounting and sensing of downstream loads.

G. The load bank shall be manufactured by ASCO/Avtron Manufacturing 1000 Series, Load Technology Inc., or approved equal.

PART 3 - EXECUTION

3.01 ENGINE-GENERATOR INSTALLATION

A. General: Mount and anchor the engine-generator set and subbase fuel tank as indicated on the Drawings and in accordance with the methods shown in the shop drawings.

B. Foundations, Installation and Grouting: Furnish the necessary materials and construct suitable concrete foundations.

C. Skilled mechanics shall install all such equipment in accordance with the instructions of the manufacturer.

D. In setting equipment, make an allowance of at least 1 inch for grout under the equipment bases. Shims used to level and adjust the bases shall be steel. Shims may be left embedded in the grout, in which case they shall be installed neatly and so as to be as inconspicuous as possible in the completed work.

E. Grout shall be non-shrink, non-metallic dimensionally stable, inorganic, premixed grout resistant to acids, alkalies and salt water, and shall be unaffected by water and oil. It shall have high strength even when used as a pourable mixture, and shall bond well with steel and cured concrete or be compatible with a suitable bonding agent which shall then be used to effect the bond. It shall be used in strict accordance with the manufacturer’s recommendations. It shall be similar, equivalent, and equal to "Five Star Grout" as manufactured by U.S. Grout Corporation; Bonsal Construction Grout, as manufactured by Bonsal Company; or equal.

F. Fuel and Lubricants: During testing and prior to acceptance, furnish all fuel and lubricants necessary for the proper operation of this equipment.

G. Tools: For each type of equipment to be furnished by the Contractor, provide a complete set of all special tools (including grease guns or other lubricating devices) which may be necessary for the routine adjustment, operation and maintenance of such equipment.

H. In the vicinity of terminations, lace all power conductors to resist short-circuit forces.

3.02 TESTING AND RUN-IN

A. General: Tests are to determine proper operation and capacity of the equipment and to demonstrate compliance with the Drawings and Specifications. All equipment that fails any test will be rejected, and complete re-testing will be required after the Contractor makes corrections or modifications to equipment which has previously failed any test. All field tests shall be witnessed by the Engineer.

B. Factory Tests: Factory test the engine-generator to assure compliance with the Drawings, Specifications, NEMA MG-1, and the manufacturer's quality control provisions. Provide three copies of all factory test reports.

C. Field Tests:
1. General: Fully field test the engine-generator to demonstrate that all components are in compliance with the Specifications and are ready for service.
2. Installation of the engine-generator shall be complete and the unit shall be serviced, tested, adjusted, and ready for use before the field tests are scheduled.
3. Provide written notice to the Engineer of the scheduled dates for the field test at least ten (10) working days prior to the field test date. The notice shall include a written test schedule listing the tests, the test procedure, the criteria for a satisfactory test, ratings of load bank to be used, and description of special measurement equipment to be employed.
4. Provide load bank testing in accordance with the manufacturer requirements. Tests shall include electrical functional testing, verifying conformance to assembly drawings and specifications. Each load step shall be cold resistance checked to verify proper calibration of resistive load steps and proper ohmic value. Tests using high potential equipment shall be performed to ensure isolation of the load circuits from the control circuits and to determine isolation of the load circuits from the load bank frame. Tests of all safety circuits shall be performed to verify conformance to the specification
5. Make repairs and adjustments as required to achieve satisfactory performance of the engine-generator unit. If repairs or adjustments are made during the tests, additional testing shall be performed as required by the Engineer, at no additional cost.
6. Make written records of the tests, and within ten (10) days after completion of the field test, submit three (3) copies of the test records to the Engineer. The test record shall indicate the test criteria and arrangement, the time of the test, the results, and pertinent data such as voltage, frequency, kilowatts, power factor, load current, oil pressure, water temperature, and ambient

temperature. Pertinent data shall be recorded for each test, and at least every thirty (30) minutes when the test requires more than thirty (30) minutes.

D. Alarm, Control, and Equipment Tests:
   1. Demonstrate each alarm and safety shutdown provision as being caused by the abnormal condition unless an alternative test condition has been favorably reviewed by the Engineer prior to the scheduling of the tests.
   2. Operate each control circuit and device to demonstrate its proper operation.
   3. Demonstrate the battery charger and jacket water heater operation successfully.

E. Operational Tests:
   1. Simulate a power failure in order to demonstrate the proper operation of the transfer switch and engine-generator.
   2. Demonstrate motor starting capability by applying the specified initial load and then the equivalent of starting and running the specified motor loads. Voltage dip shall be measured and recorded to demonstrate conformity to the Specifications.
   3. Show that phase rotation of the engine-generator and the utility power are compatible at the site.

F. Endurance Tests:
   1. Operate the engine-generator for 1/2 hour at one-half its kW rating.
   2. Operate the engine-generator for eight (8) hours continuously at 100% of its kW and kVA ratings.
   3. Measure the temperature rise of the windings of the generator using the resistance method.

G. Provide load banks, fuel, test equipment, labor, materials, and all other equipment and services required for all tests.

3.03 OWNER ORIENTATION

A. Provide instruction of Owner's representatives.

END OF SECTION

THIS PAGE INTENTIONALLY BLANK

SECTION 16250

AUTOMATIC AND MANUAL TRANSFER SWITCHES

PART 1 - GENERAL

1.01 SECTION INCLUDES

A. Provisions: Applicable provisions of Section 16010 become a part of this Section as if repeated herein.

B. Work Included. Provide transfer switch complete with controls and accessories, as shown on the Drawings at each location shown on the Drawings.

C. Related Work Specified in Other Sections:
1. Section 16205: Standby Diesel Engine-Generator Set

1.02 REFERENCE STANDARDS

A. American National Standards Institute (ANSI) Publication:
1. Z55.1 Gray Finishes for Industrial Apparatus and Equipment

B. National Electrical Manufacturers Association (NEMA) Publication:
1. ICS 1 General Standards for Industrial Controls and Systems
2. ICS 6 Standards for Industrial Control Devices, Controllers and Assemblies
3. CS 6 Enclosures for Industrial Controls and Systems
4. ICS10 AC Automatic Transfer Switches

C. Underwriters Laboratories (UL) Standard:
1. 1008 Standard for Transfer Switch Equipment
2. 508 Industrial Control Equipment

D. National Fire Protection Association (NFPA)
1. 70 National Electrical Code
2. 110 Emergency and Standby Power Systems

E. Institute of Electrical and Electronics Engineers (IEEE)
1. 446 Recommended Practice for Emergency and Standby Power Systems for Commercial and Industrial Applications

F. International Electrical Testing Association (NETA):
1. ATS Acceptance Testing Specifications for Electrical Power Distribution Equipment and Systems

1.03 SUBMITTALS

A. Submit material or equipment data in accordance with the Product Review category of the General Conditions and the submittal requirements of Section 16010.

B. Submit shop drawings which include:
1. Dimensioned drawings
2. Elementary diagrams
3. Wiring diagrams
4. Nameplate list

5. Evidence that the equipment will be provided with all specified accessories, options, features, and characteristics.
6. Certifications that the equipment is designed and manufactured in conformance with applicable codes and standards.
7. Regarding the seismic anchorage requirements:
   a. certification of compliance or written notice of noncompliance, and

C. Manual. Provide manufacturer's installation and maintenance instruction manuals in conformance with Section 16010.

PART 2 - PRODUCTS

2.01 AUTOMATIC TRANSFER SWITCH

A. General. The automatic transfer switch shall transfer from the normal service to a standby engine generator in the event of power failure. The switch shall transfer the system back to normal power after normal power has been restored. The switch shall include all controls and accessories. The switch shall be UL labeled, shall meet the requirements of UL Standard 1008 and shall be suitable for total system transfer including motor and lighting loads. The ATS shall be housed in a NEMA 1, gasketed enclosure.

B. Construction:
1. The automatic transfer switch shall be electrically operated and mechanically held. The electrical operator shall be a momentarily energized, single-solenoid mechanism. Main operators which include overcurrent disconnect devices, linear motors or gears shall not be acceptable. The switch shall be mechanically interlocked to ensure only two possible positions, normal or emergency.
2. The switch shall be positively locked and unaffected by momentary outages, so that contact pressure is maintained at a constant value and contact temperature rise is minimized for maximum reliability and operating life.
3. All main contacts shall be silver composition. Switches rated 800 amperes and above shall have segmented, blow-on construction for high withstand and close-on capability and be protected by separate arcing contacts.
4. Inspection of all contacts shall be possible from the front of the switch without disassembly of operating linkages and without disconnection of power conductors. Switches rated 800 amps and higher shall have front removable and replaceable contacts. All stationary and moveable contacts shall be replaceable without removing power conductors and/or bus bars.
5. Designs utilizing components of molded-case circuit breakers, contactors, or parts thereof, which are not intended for continuous duty, repetitive switching or transfer between two active power sources are not acceptable.
6. The transfer switch shall have the following features:
   a. Continuous rating of 480 volts, 3 phase, with 3 poles and full neutral bus. Current rating shall be as shown on the Drawings.
   b. Line Adequate line and load lugs for terminating the power conductors shown on the Drawings.
   c. A terminal strip with terminals for terminating all external control circuits. Number all terminals using the wire number for the wire terminated.
   d. Cable wiring with cable ties, secured in place and guarded where subject to mechanical injury.

e. Permanent identification of each wire at each point of connection using numbered wiring sleeves. Provide electrically common wires with the same number. Uniquely number electrically different wires.

C. Microprocessor Controller

1. A four line, 20 character LCD display and keypad shall be an integral part of the controller for viewing all available data and setting desired operational parameters. Operational parameters shall also be available for viewing and limited control through the serial communications input port. The following parameters shall only be adjustable via DIP switches on the controller:
   a. Nominal line voltage and frequency
   b. Single or three phase sensing
   c. Operating parameter protection
2. The controller's sensing and logic shall be provided by a single built-in microprocessor for maximum reliability, minimum maintenance, and the ability to communicate serially through an optional serial communication module.
3. A single controller shall provide twelve selectable nominal voltages for maximum application flexibility and minimal spare part requirements. Voltage sensing shall be true RMS type and shall be accurate to 1% of nominal voltage. Frequency sensing shall be accurate to 0.2%. The panel shall be capable of operating over a temperature range of -20 to +60 degrees C and storage from -55 to +85 degrees C.
4. The controller shall be connected to the transfer switch by an interconnecting wiring harness. The harness shall include a keyed disconnect plug to enable the controller to be disconnected from the transfer switch for routine maintenance. Sensing and control logic shall be provided on multi-layer printed circuit boards. Interfacing relays shall be industrial grade plug-in type with dust covers. The panel shall be enclosed with a protective cover and be mounted separately from the transfer switch unit for safety and ease of maintenance. The protective cover shall include a built-in pocket for storage of the operator’s manuals.
5. All customer connections shall be wired to a common terminal block to simplify field-wiring connections.

D. Time Delays

1. An adjustable time delay of 0 to 6 seconds shall be provided to override momentary normal source outages and delay all transfer and engine starting signals.
2. A time delay shall be provided on transfer to emergency, adjustable from 0 to 60 minutes, for controlled timing of transfer of loads to emergency.
3. Two time delay modes (which are independently adjustable) shall be provided on re-transfer to normal. One time delay shall be for actual normal power failures and the other for the test mode function. The time delays shall be adjustable from 0 to 60 minutes. Time delay shall be automatically bypassed if the emergency source fails and the normal source is acceptable.
4. A time delay shall be provided on shut down of engine generator for cool down, adjustable from 0 to 60 minutes.
5. A time delay activated output signal shall also be provided to drive an external relay(s) for selective load disconnect control. The controller shall have the ability to activate an adjustable 0 to 5 minute time delay in any of the following modes:

a. Prior to transfer only.
b. Prior to and after transfer.
c. Normal to emergency only.
d. Emergency to normal only.
e. Normal to emergency and emergency to normal.
f. All transfer conditions or only when both sources are available

6. All time delays shall be adjustable in 1 second increments, except the extended parallel time, which shall be adjustable in .01 second increments.
7. All time delays shall be adjustable by using the LCD display and keypad or with a remote device connected to the serial communications port.

E. Controls. Include the following controls and accessories:

1. Voltage and frequency on both the normal and emergency sources (as noted below) shall be continuously monitored, with the following pickup, dropout, and trip setting capabilities (values shown as % of nominal unless otherwise specified):

Parameter	Sources	Dropout / Trip	Pickup / Reset
Undervoltage	N&E,3PH	70 to 98%	85 to 100%
Overvoltage	N&E,3PH	102 to 115%	2% below trip
Underfrequency	N&E	85 to 98%	90 to 100%
Overfrequency	N&E	102 to 110%	2% below trip
Voltage unbalance	N&E	5 to 20%	1% below dropout

2. Repetitive accuracy of all settings shall be within ± 0.5% over an operating temperature range of -20C to 60C.
3. Voltage and frequency settings shall be field adjustable in 1% increments either locally with the display and keypad or remotely via serial communications port access.
4. The controller shall be capable (when activated by the keypad or through the serial port) of sensing the phase rotation of both the normal and emergency sources. The source shall be considered unacceptable if the phase rotation is not the preferred rotation selected (ABC or CBA).
5. Source status screens shall be provided for both normal & emergency to provide digital readout of voltage on all 3 phases, frequency, and phase rotation.
6. The controller shall include a user selectable algorithm to prevent repeated transfer cycling to a source on an installation which experiences primary side, single phase failures on a Grounded Wye – Grounded Wye transformer which regenerates voltage when unloaded. The algorithm shall also inhibit retransfer to the normal (utility) source upon detection of a single phasing condition until a dedicated timer expires, the alternate source fails, or the normal source fails completely and is restored during this time delay period. The time delays associated with this feature shall be adjustable by the user through the controller keypad and LCD.
7. A three position momentary-type test switch shall be provided for the test / automatic / reset modes. The test position will simulate a normal source failure. The reset position shall bypass the time delays on either transfer to emergency or retransfer to normal.
8. A SPDT contact, rated 5 amps at 30 VDC, shall be provided for a low-voltage engine start signal. The start signal shall prevent dry cranking of the engine

by requiring the generator set to reach proper output, and run for the duration of the cool down setting, regardless of whether the normal source restores before the load is transferred.

9. Auxiliary contacts, rated 10 amps, 250 VAC shall be provided consisting of one contact, closed when the ATS is connected to the normal source and one contact closed, when the ATS is connected to the emergency source.
10. LED indicating lights (16 mm industrial grade, type 12) shall be provided; one to indicate when the ATS is connected to the normal source (green) and one to indicate when the ATS is connected to the emergency source (red).
11. LED indicating lights (16 mm industrial grade, type 12) shall be provided and energized by controller outputs. The lights shall provide true source availability of the normal and emergency sources, as determined by the voltage sensing trip and reset settings for each source.
12. Communications Module – Shall provide remote interface module to support monitoring of vendor's transfer switch, controller and optional power meter. Module shall provide status, analog parameters, event logs, equipment settings & configurations over embedded webpage and open protocol. Features shall include:
    a. Email notifications and SNMP traps of selectable events and alarms may be sent to a mobile device or PC.
    b. Modbus TCP/IP, SNMP, HTTP, SMTP open protocols shall be simultaneously supported.
    c. Web app interface requiring user credentials to monitor and control the transfer switch supporting modern smart phones, tablets and PC browsers. User will be able to view the dynamic one-line; ATS controls status, alarms, metering, event logging as well as settings.
    d. Secure access shall be provided by requiring credentials for a minimum of 3 user privilege levels to the web app, monitor (view only), control (view and control) and administrator (view, control and change settings). 128-Bit AES encryption standard shall be supported for all means of connectivity.
    e. Shall allow for the initiating of transfers, retransfers, bypassing of active timers and the activating/deactivating of engine start signal shall be available over the embedded webpage and to the transfer switch vendor's monitoring equipment.
    f. An event log displaying a minimum of three hundred (300) events shall be viewable and printable from the embedded webpages and accessible from supported open protocols.
    g. Four (4) 100 Mbps Ethernet copper RJ-45 ports, five (2) serial ports, Termination dip-switches and LEDs for diagnostics.
    h. DIN rail mountable

2.02 MANUAL TRANSFER SWITCH

A. Transfer switch shall be manually operated and mechanically held, non-fusible, 3 pole, double throw, rated 600 Vac, with solid neutral, ampere rating as shown on the Drawings, UL 1008 compliant, and 50,000 RMS amperes symmetrical interrupting capacity. Enclosure shall be NEMA 4X, 316SS and equipped with strip heater and thermostat. Provide ASCO Series 300 (3MTS); or approved equal.

B. The switch shall be positively locked and unaffected by momentary outages so that contact pressure is maintained at a constant value and temperature rise at the contacts is minimized for maximum reliability and operating life.

C. All main contacts shall be silver composition.

D. Inspection of all contacts shall be possible from the front of the switch without disassembly of operating linkages and without disconnection of power conductors.

E. Designs utilizing components of molded-case circuit breakers, contactors, or parts thereof which are not intended for continuous duty, repetitive switching or transfer between two active power sources are not acceptable.

F. Where neutral conductors are to be solidly connected, a neutral terminal plate with fully-rated CU pressure connectors shall be provided.

G. The MTS shall be tested in accordance with UL 1008 for transfer switches. Switch ratings of 260 amperes and less shall have endurance rating of 6000 cycles, 400 ampere shall have endurance rating of 4000 cycles, and 600 – 1200 ampere shall have endurance rating of 3000 cycles.

PART 3 - EXECUTION

3.01 INSTALLATION

A. Securely anchor the automatic transfer switch both to the wall and floor to match the existing installation. The door shall open freely and close tightly. Repair any defect or damage to the switch, enclosure or paint, to the satisfaction of the Engineer.

B. Securely anchor the manual transfer switch to the equipment foundation as shown on the structural drawings. The door shall open freely and close tightly. Repair any defect or damage to the switch or enclosure to the satisfaction of the Engineer.

C. Lace all power conductors to resist short circuit forces.

3.02 SERVICE REPRESENTATION

A. The ATS and MTS manufacturer(s) shall maintain a national service organization of company-employed personnel located throughout the contiguous United States. The service center's personnel must be factory trained and must be on call 24 hours a day, 365 days a year.

B. The manufacturer shall maintain records of each switch, by serial number, for a minimum of 20 years.

3.03 FACTORY TESTING

A. The complete ATS and MTS shall be factory tested to ensure proper operation of the individual components and correct overall sequence of operation and to ensure that the operating transfer time, voltage, frequency and time delay settings are in compliance with the specification requirements.

B. The ATS and MTS manufacturer(s) shall be certified to ISO 9001:2008 International Quality Standard and the manufacturer shall have third party certification verifying quality assurance in design/development, production, installation and servicing in accordance with ISO 9001:2008.

3.04 FIELD TESTING

A. Field Tests shall be performed in accordance with 16950 – Electrical Tests.

END OF SECTION

THIS PAGE INTENTIONALLY BLANK

SECTION 16402

UNDERGROUND ELECTRICAL WORK

PART 1 - GENERAL

1.01 SECTION INCLUDES

A. Provisions: Applicable provisions of Section 16010 become a part of this Section as if repeated herein.

1.02 APPLICABLE STANDARDS

A. The publications listed below form a part of this specification to the extent referenced. The publications are referred to in the text by the basic designation only.

1. American Concrete Institute (ACI) Publication:
   a. 318 Building Code Requirements for Structural Concrete
2. American Society of Testing and Materials (ASTM) Publications:
   a. A36 Standard Specification for Carbon Structural Steel
   b. A153 Standard Specification for Zinc Coating (Hot-Dip) on Iron and Steel Hardware
   c. A615 Standard Specification for Deformed and Plain Carbon - Steel Bars for Concrete Reinforcement
   d. C33 Standard Specification for Concrete Aggregates
   e. C139 Standard Specification for Concrete Masonry Units for Construction of Catch Basins and Manholes
   f. C150 Standard Specification for Portland Cement
   g. C478 Standard Specification for Circular Precast Reinforced Concrete Manhole Sections
   h. C857 Standard Practice for Minimum Structural Design Loading for Underground Precast Concrete Utility Structures
   i. C858 Standard Specification for Underground Precast Concrete Utility Structures
   j. D882 Standard Test Method for Tensile Properties of Thin Plastic Sheeting
3. American Association of State Highway and Transportation Officials (AASHTO) Publication:
   a. HB Standard Specifications for Highway Bridges
4. American National Standard Institute (ANSI) Publication:
   a. C2 National Electrical Safety Code
5. National Fire Protection Association (NFPA) Publication:
   a. 70 National Electrical Code (NEC)

1.03 SUBMITTALS

A. Submit material or equipment data in accordance with the Product Review category of the General Conditions and the submittal requirements of Section 16010.

B. Manufacturer's Data and Shop Drawings:

1. Manhole and Handhole - Include a table of dimensions which shows proposed size of each manhole and handhole.
2. Manhole Frame and Cover
3. Handhole Frame and Cover
4. Sealing Material for Precast Manhole and Handhole Joints

C. Certificates
1. Test Reports: Submit for approval 30 days before the materials are used, copies of laboratory test reports for the following:
a. Arc-proofing test for cable fireproofing materials

PART 2 - PRODUCTS

2.01 GENERAL

A. Materials and equipment shall conform to the respective specifications and standards and to the specifications herein. Electrical ratings shall be as indicated.

B. Conduit: Provide per Section 16110.

C. Wire and Cable: Provide per Section 16120, and Section 16124.

2.02 HANDHOLES

A. Provide handholes of reinforced precast concrete, or injection molded composite plastic material. Handholes shall include a base, a body, extensions, and a cover. Handholes with a perimeter of 10 feet or more (e.g., 3 feet by 2 feet) shall have both pulling irons and cable racks. All hardware shall be stainless steel, or hot-dip galvanized after fabrication; cable racking hardware, however, shall be non-metallic and corrosion resistant as manufactured by Pacific Utilities Supply (415) 495-4940 (see PG&E Standard Detail Drawing 028077), or equal. If no handhole size is shown on the Drawings, size units per NEC or provide 12 inches by 24 inches by 18 inches deep, whichever is larger. Handholes containing fiber optic cables shall be 32 inches by 48 inches by 36 inches deep at a minimum. Structure shall be fabricated in accordance with ACI 318.

B. Handholes shall be HS 20-44 as given in AASHTO HB. Handholes shall withstand 350 pounds loading per square foot.

2.03 WARNING TAPE

A. Provide plastic-metallic, detectable warning tape for installation above underground duct banks. Tape shall be designed for both conductive and inductive locating procedures.

B. Construction:
1. Tape shall consist of a minimum of three layers: a polyolefin pigmented film, an aluminum foil core, and a clear encapsulating film.
2. The tape material and ink shall be chemically inert and resistant to acids, alkalis, and other destructive substances likely to be encountered in soils.
3. Thickness: 5-mil minimum.
4. Width: 6-inches.
5. Tensile strength: 130 pound-feet minimum, per ASTM D882.

C. Color coding and markings:

1. For use above duct banks containing copper power, control, signal, and/or telecommunication cables: Red tape imprinted with “CAUTION BURIED ELECTRIC LINE BELOW.”
2. For use above duct banks containing fiber optic cables: Orange tape imprinted with “CAUTION BURIED FIBER OPTIC LINE BELOW.”

D. Manufacturer: Terra Tape Sentry Line Diamond Detectable by Reef Industries, Inc.; Detectable Underground Warning Tape by Emedco; or approved equal.

PART 3 - EXECUTION

3.01 TRENCHING, BACKFILL, AND COMPACTION

A. See City Standard references

B. Warning Tape:
1. Install warning tape in backfill material, 6-inches above top of conduit or top of encasement for all underground duct banks.
2. Use clips from the tape manufacturer to ensure that splices or lateral tees in warning tape are electrically continuous for the entire length between accessible pulling point locations along the duct bank.
3. In duct bank segments containing both copper and fiber optic cable types, install both types of warning tape.

3.02 WIRE AND CABLE INSTALLATION

A. See Section 16120 and Section 16124.

3.03 UNDERGROUND RACEWAYS WITH CONCRETE ENCASEMENT

A. All underground raceways shall be encased in concrete unless otherwise specifically shown otherwise on the Drawings.
1. Concrete encasement shall be minimum of 3 inches around outer walls of raceways and minimum of 3 inches between raceways. Conduits shall be PVC Type EB.
2. Concrete shall be Portland Cement type with 4 sacks cement per cubic yard of concrete, maximum coarse aggregate size of 3/8-inches and shall have minimum strength of 3,000 psi after 28 days. Amount of water shall not exceed slump required for placement.
3. The concrete shall be dyed red throughout the ducts; surface treatment will not be acceptable. Colorant shall consist of an integral red-oxide coloring pigment in the proportion of 8 pounds per cubic yard of concrete. The costs, if any, of cleaning coloring pigment from the concrete delivery equipment and other related cleanings shall be considered as part of the work.
4. Underground raceways shall slope toward manholes, pullboxes, etc., at minimum rate of 3 inches per 100 feet unless indicated otherwise on Drawings. Raceway entrances in manholes, handholes, etc., shall be by means of bell ends and shall be sealed against entry of silt, debris, rodents, etc., into raceways.
5. Top of concrete encasement shall be minimum of 24 inches below grade.
6. Minimum radius of all horizontal bends in underground duct banks shall be 12 times nominal size of conduit for conduit sizes 3-inches and below and 24 times nominal size of conduits for conduits larger than 3-inches. Bends shall

be formed of factory made sweeps or continuous assembly of bend segments or curved segments, except that polyvinyl chloride conduits may be field formed. Minimum radius of all vertical bends in underground raceways shall be ten times nominal size of conduit. Vertical bends shall be made of rigid steel or permanently coated aluminum conduit.

8. Underground raceways within roadways shall be run parallel or perpendicular to road centerline.
9. Pull ropes left in underground raceways:
   a. General purpose raceways:1/8-inch nylon or 3/16-inch polypropylene rope.
10. Terminate conduits in end-bells where duct lines enter manholes and handholes. Provide structural support for concrete encased duct banks at the point where they terminate. Separators shall be of precast concrete, high impact polystyrene, steel, or any combination of these. Stagger the joints of the conduits by rows and layers so as to provide a duct line having the maximum strength. During construction, protect partially completed duct lines from the entrance of debris such as mud, sand and dirt by means of suitable conduit plugs. As each section of a duct line is completed, draw a brush through having the diameter of the duct, and having stiff bristles until the conduit is clear of all particles of earth, sand, and gravel; then immediately install conduit plugs. Unused conduits shall remain plugged.

B. Connections to Existing Ducts: Where connections to existing duct lines are indicated, excavate the lines to the maximum depth necessary. Cut off the lines and remove loose concrete from the conduits before new concrete encased ducts are installed. Provide a reinforced concrete collar, poured monolithically with the new duct line, to take the shear at the joint of the duct lines. Remove existing cables that constitute interference with the work. Abandon in place those used ducts and cables that do not interfere with the work.

C. Removal of Ducts: Where duct lines are removed from existing manholes, close the openings to waterproof the manhole. Chip out the wall opening to provide a key for the new section of wall.

D. See Section 16110 for additional requirements.

3.04 UNDERGROUND RACEWAYS WITHOUT CONCRETE ENCASEMENT

A. Provide raceways without concrete encasement only if specifically shown on the Drawings, otherwise, provide concrete encasement as above.

B. Provide sand backfill three inches all around the raceway.

C. Construct raceways per the applicable provisions above for underground raceways with concrete encasement.

D. See Section 16110 for additional requirements.

3.05 MANHOLES AND HANDHOLES

A. Provide handholes complete with all accessories, as indicated. Provide additional handholes as needed so that the spacing between handholes does not exceed 300 feet.

B. Identification:

1. Identify each casting by having the manufacturer's name and address cast into an interior face or permanently attached thereto.
2. Stencil manhole number inside the neck with 3-inch-high yellow letters.

C. Covers of dedicated fiber optic manholes and handholes shall have the words "Fiber Optic" in raised letters on the top.Manhole, Handhole, or Concrete Pullbox Grounding: Ground rods installed in electrical distribution system manholes, handholes, or concrete pullboxes shall be properly connected to the cable shielding, metallic sheath, and armor at each cable joint or splice by means of No. 4 AWG or equivalent braided tinned copper wire. Connections to metallic cable sheaths shall be by means of tinned terminals soldered to ground wires and to cable sheaths. Care shall be taken in soldering not to damage metallic cable sheaths or shields. Ground rods shall be protected with a double wrapping of pressure-sensitive plastic tape for a distance of 2 inches above and 6 inches below concrete penetrations. Ground wires shall be protected with a double wrapping of pressure-sensitive plastic tape for a distance of 2 inches above and 6 inches below concrete penetrations. Ground wires shall be neatly and firmly attached to manhole and handhole walls and the amount of exposed bare wire shall be held to a minimum.

D. Installation of Cable in Manholes and Handholes: Do not install cables utilizing the shortest route, but route along those walls providing the longest route and the maximum spare cable lengths. Form all cables to closely parallel walls, not to interfere with duct entrances, and support on brackets and cable insulators at a maximum of 18 inches. In existing manholes, handholes and vaults where new ducts are to be terminated or where new cables are to be installed, provide cable supports and grounding as required for a neat and workmanlike installation with all cables properly arranged and supported. Support cable splices in underground structures by racks, leaving top space open for future cables, except as otherwise indicated for existing installations. Provide one spare three-insulator rack arm for each cable rack in each underground structure. Provide additional cable racks in each existing underground structure through which new cable is run.

END OF SECTION

THIS PAGE INTENTIONALLY BLANK

SECTION 16450

ELECTRICAL GROUNDING

PART 1 - GENERAL

1.01 SECTION INCLUDES

A. Provisions: Applicable provisions of Section 16010 become a part of this Section as if repeated herein.

B. Work Included: Furnish all labor, material, equipment, tools and services necessary for the installation, connection and testing of all grounding as specified herein and as shown on the Drawings.

1.02 REFERENCE STANDARD

A. American Society for Testing and Materials (ASTM) Publication:
   1. B228 Copper Clad Steel Conductors Specification
   2. D178 Specifications for Rubber Insulating Matting

B. Institute of Electrical and Electronics Engineers:
   1. 142 Grounding of Industrial and Commercial Power Systems (Green Book)

C. International Electrical Testing Association (NETA) Publication:
   1. ATS Acceptance Testing Specifications for Electrical Equipment for Power Systems

D. National Fire Protection Association (NFPA):
   1. 70 National Electrical Code (NEC)

E. Telecommunications Industry Association (TIA)
   1. 607 Generic Telecommunications Bonding and Grounding (Earthing) for Customer Premises

F. Underwriters Laboratories (UL) Standards:
   1. 467 UL Standard for Safety Grounding and Bonding Equipment

1.03 SUBMITTALS

A. Submit material or equipment data in accordance with the Product Information category of the General Conditions and the submittal requirements of Section 16010.

PART 2 - PRODUCTS

2.01 GENERAL

A. The grounding systems shall consist of the ground rods, grounding conductors, ground bus, ground fittings and clamps, and bonding conductors to water piping, structural steel and UFER grounding as shown on the Drawings. One system shown provides service and separately derived system grounds. A second system is an electronic ground system to provide for the discharge of static electricity.

2.02 SYSTEM COMPONENTS

A. Ground Rods: Ground rods shall be cone pointed copper clad Grade 40 HS steel rods conforming to UL 467. The welded copper encased steel rod shall have a conductivity of not less than 27% of pure copper. Rods shall be not less than 3/4-inch in diameter and 10 feet long, unless otherwise indicated. Rods longer than 10 feet shall be made up of 10-foot units joined together with threaded couplings. The manufacturer's trademark shall be stamped near the top.

B. Ground Conductors: Buried conductors shall be medium-hard drawn bare copper; other conductors shall be soft drawn copper. Sizes over No. 6 AWG shall be stranded. Coat all ground connections except the exothermic welds with electrical joint compound, non-petroleum type, UL listed for copper and aluminum applications.

C. Ground Connections: Connection to ground rods and buried connections shall be made by irreversible, compression connectors, constructed of high-copper alloy, and manufactured specifically for the particular grounding application. Lugs for attachment of cables to steel enclosures shall be of the binding post type with a 1/2-13NC stud. Each post shall accommodate cables from #4 AWG to #4/0 AWG.

D. Ground Rod Boxes: Boxes shall be a 9-inch-diameter (minimum) precast concrete traffic rated unit with concrete traffic rated lid. Units shall be 12-inches deep. Covers shall be embossed with the wording "Ground Rod." OR Boxes shall be a 12-inch-diameter (minimum) precast concrete traffic rated unit with cast iron lid. Units shall be 12-inches deep. Covers shall be embossed with the wording "Ground Rod."

E. Ground Bus:
   1. Provide ground buses where indicated on the Drawings for the power system. Ground buses which are integral to a piece of equipment (such as switchgear, switchboards, panelboards, and industrial control panels) shall be provided with the equipment in accordance with the respective equipment specification.
   2. Ground buses shall be UL-listed high conductivity copper alloy bar conforming to ASTM B187-C11000.
      a. Ground buses for power systems:
         1) Minimum dimensions: 1/4-inch thick x 4 inches wide x 12 inches long, or as shown on the Drawings.
         2) Busbar shall be predrilled at regular intervals to accept 1/4-inch and 3/8-inch diameter bolts.
         3) Bus shall be equipped with fiberglass-reinforced molded polyester UL-compliant standoff insulators rated for 600V.
         4) Bus shall be mounted with 1/8” thick stainless steel brackets and 3/8” stainless steel bolts. The standoffs and brackets shall provide a minimum 2-inch spacing between the back of the busbar and the mounting surface.

F. Equipment Grounding Plates: Equipment grounding plates shall be of the irreversible compression type suitable for embedment in cast concrete. Equipment grounding plates shall be made of high-strength, high-conductivity cast copper alloy body with a pure wrought copper compression element. Equipment grounding plate shall be 4 hole and suitable for termination with size #2-250kcmil copper conductors. Ground Plates shall be Hubbell/Burndy Type YGF or approved equal.

G. Insulating Tape: Insulating tape for copper conductors passing through concrete slabs shall be UL Listed, premium grade, 10-mil thick, pressure-sensitive vinyl insulating tape. Tape shall have elastic backing with strong adhesive strength. Tape shall be 3M/Scotch Vinyl Insulation Tape 22, or approved equal.

PART 3 - EXECUTION

3.01 INSTALLATION

A. Ground all equipment for which a ground connection is required per NEC whether or not the ground connection is specifically shown on the Drawings.

B. Provide a ground wire in every conduit carrying a circuit of over 50 volts to ground.

C. Sizes shall be as indicated on the Conduit/Cable Schedule and in accordance with NEC Article 250.

D. Provide a grounding-type bushing for secondary feeder conduits that originate from the secondary section of each MCC section, switchboard, or panelboard.

E. Individually bond the raceway to the ground bus in the secondary section.

F. Provide a separate grounding conductor in each individual raceway for parallel feeders. Connect the parallel ground conductors together at each end of the parallel run, as required by the NEC.

G. Interconnect the secondary switchgear MCC or panelboard neutral bus to the ground bus in the secondary switchgear compartment only at the service entrance point. For wye connected, 3 phase, separately derived systems with 3 wire distribution, connect the transformer neutral to the grounding electrode system at the transformer. Connections shall be in accordance with the NEC.

H. Provide a ground ring with minimum burial depth of 36 inches or as indicated on the Drawings, whichever is greater.

I. Embed a grounding conductor in every duct bank as indicated. The ground conductor shall be terminated at the ground grid at each end of the duct bank. Where no ground grid is installed, terminate at a suitable grounding electrode conductor near the end of the duct bank in accordance with the NEC.

J. Provide a ground rod box for each ground rod so as to permit ready access for the connection and/or removal of any pressure connectors to facilitate testing.

K. Install ground enhancement material around each ground rod per GEM manufacturer's installation instructions. GEM shall extend 6 inches in all directions around the ground rod surface. GEM shall extend from 8 inches below top of ground rod to bottom of ground rod.

L. Bond metallic water piping at its entrance into each building. Ground separately derived electrical system neutrals to the metallic water piping in addition to the system driven ground, per NEC requirements.

M. Make embedded or buried ground connections, taps and splices with irreversible, compression connectors. Do not conceal or cover ground connections until the Engineer or an authorized representative has established that every grounding

connection conforms to the requirements of the Contract Documents and has given the Contractor written confirmation.

N. Effectively bond structural steel for buildings to the grounding system using exothermic welds.

O. Where bare copper ground conductor is installed through a new concrete slab, wrap the conductor with insulating tape before pouring concrete. Apply tape in half-lapped layers with sufficient tension to produce a uniform wind, with no tension on the last wrap to prevent flagging.

P. Provide a separate grounding conductor for each motor and connect at motor box. Provide a supplemental ground connection for motor shaft grounding rings, where applicable.

Q. Provide supplemental external bonding jumpers from equipment to the grounding electrode system as shown on the Drawings.

R. Ground buses
   1. Clean copper busbars to remove oxidation and apply an anti-oxidant compound immediately prior to termination of lugs.
   2. Provide a separate connection bolt or screw for each termination. Lugs shall not be stacked.

S. Shielded instrumentation cable shall have its shield grounded at one end only unless the approved Shop Drawings indicate otherwise. The grounding point shall be at the control panel or at the receiving end of the signal carried by the cable. The termination of the shield drain wire shall be on its own terminal. Form a instrument signal ground block by jumping together the shield drain wire terminals, using manufactured terminal block jumpers or a #14 AWG green insulated conductor. Bond the instrument signal ground block to the main ground bus for the panel via a #12 AWG green insulated conductor.

3.02 TESTING

A. Testing shall be in accordance with Specification 16950 – Electrical Tests.

B. Furnish to the Engineer a test report with recorded data of each ground rod location.

END OF SECTION

SECTION 16950

ELECTRICAL TESTS

PART 1 - GENERAL

1.01 SCOPE OF WORK

A. This Section specifies the work necessary to test, commission, and demonstrate that the electrical system satisfies the requirements of these Specifications and functions as required by the Contract Documents. The work of this Section is applicable to both pre and post energization testing required by the Manufacturer to facilitate sign-off on their respective equipment as well as pre and post energization testing performed by an independent third party entity independent of manufacturers, suppliers and installers of electrical equipment, installations and systems.

B. The Work shall include furnishing the labor, equipment, and power required to support the testing indicated in other Divisions of these Specifications. Electrical testing indicated herein and functional testing of power and controls as indicated on the Drawings. This scope may require the Contractor to activate circuits, shutdown circuits, run equipment, make electrical measurements, replace blown fuses, and install temporary jumpers, etc.

C. Carry out tests indicated herein for individual items of materials and equipment in other Sections. Testing shall be done in accordance with the manufacturer's instructions, these Specifications, and applicable NETA Acceptance Testing Specifications, NEMA, ANSI, NFPA, and ASTM Standards.

D. Factory Acceptance Testing and other off-site test requirements are included in other Sections.

E. Corrections and Replacements
   1. Before final acceptance, each part of the work shall be thoroughly tested, and each test shall be documented and submitted in accordance with the Contract Documents.
   2. Any materials or equipment failing any test shall be corrected or replaced as required to pass the test at no additional cost to the Owner.
   3. Any materials or equipment failing any test shall be re-tested after correction or replacement to verify compliance.
   4. Any failures shall again be corrected or replaced, and then re-tested.
   5. The correction/replacement/re-testing cycle shall continue until the item passes the required test(s).

1.02 REFERENCE STANDARDS

A. Electric equipment, materials, installation, and testing shall comply with the National Electrical Code (NEC), and shall also conform to the following codes and standards:
   1. American National Standards Institute (ANSI)
   2. InterNational Electrical Testing Association (NETA)

3. Institute of Electrical and Electronics Engineers (IEEE)
4. Occupational Health and Safety Administration (OSHA)
5. ASTM International Standard E329
6. IEEE 400, Guide for Field Testing and Evaluation of the Insulation of Shielded Power Cable Systems
7. IEEE 576, Recommended Practice for Installation, Termination, and Testing of Insulated Power Cable as Used in Industrial and Commercial Applications
8. National Fire Protection Association (NFPA) 70B, NEC for Maintenance
9. Telecommunications Industry Association (TIA) 568-C.2, Balanced Twisted-Pair Telecommunications Cabling and Components Standards.

1.03 SUBMITTALS

A. Submit complete system test procedures and test record forms for review. Test procedures shall include but not be limited to:
   1. Detailed procedures, both pre and post energization testing requirements of the Manufacturer and independent third-party entity, in sufficient detail to verify conformance with these Specifications.
   2. Incorporation of data collection and measurement values as shown in the sample test record forms provided at the end of this Section. Submitted test record forms shall include space for each of the fields listed, at a minimum.
   3. Detailed comprehensive testing schedule including:
      a. Electrical testing of each major area.
      b. Each major piece of electrical distribution equipment.
      c. Each major electrical subsystem.
      d. Duration of each test.
      e. Milestone test completion date.
      f. Date of test results submittals following completion of the tests.
      g. Names and qualifications of the individual(s) responsible for performing the testing, including a copy of current NETA Technician cards.
      h. Proof of NETA accreditation for the testing agency.

B. Following completion of the test submit the completed test results to the Engineer for review. The results shall include a dedicated section with the "as-left" settings of all devices, relays, circuit breakers, etc.

C. Test results shall be submitted in one submittal.

D. Test reports shall be based on NETA's latest Acceptance Testing Specifications having a sign-off, pass/fail data filed for each line item covered by NETA's Acceptance Testing Specifications latest edition.

1.04 QUALITY ASSURANCE

A. Testing Firm Qualifications:
   1. Corporately and financially independent organization functioning as an unbiased testing authority.
   2. Professionally independent of manufacturers, suppliers, and installers of electrical equipment and systems being tested.
   3. Employer of engineers and technicians regularly engaged in testing and inspecting of electrical equipment, installations, and systems.

4. Supervising engineer accredited as Certified Electrical Test Technologist by NICET or NETA and having a minimum of 5 years testing experience on similar projects.
5. Technicians certified by NICET or NETA.
6. Registered Professional Engineer to provide comprehensive project report outlining services performed, results of such services, recommendations, actions taken, and opinions.
7. In compliance with OSHA CFR 29, Part 1910.7 criteria for accreditation of testing laboratories or a full member company of NETA.

B. Test equipment shall have an operating accuracy equal to or greater than requirements established by NETA ATS.

C. Test instrument calibration shall be in accordance with NETA ATS.

1.05 FIELD TESTS

A. All testing shall be performed in the presence of the Owner.

B. Any system material or workmanship that is found to be defective on the basis of acceptance tests shall be reported directly to the Owner.

PART 2 - PRODUCTS

2.01 PRE-ENERGIZATION AND OPERATING TESTS

A. The complete electrical system for each phase of construction shall be performance tested when first installed on-site. Each protective, switching, and control circuit shall be adjusted in accordance with the recommendations of the Protective Device Coordination Study required by Section 16961 and tested by actual operation using current injection or equivalent methods as necessary to ensure that each and every such circuit operates correctly to the satisfaction of the Owner.
1. Instrument Transformers. All instrument transformers shall be tested to verify correct polarity and burden.
2. Protective Relays. Each protective relay shall be demonstrated to operate by injecting current or voltage, or both, at the associated instrument transformer output terminal and observing that the associated switching and signaling functions occur correctly and in proper time and sequence to accomplish the protective function intended.
3. Switching Circuits. Each switching circuit shall be observed to operate the associated equipment being switched.
4. Control and Signal Circuits. Each control or signal circuit shall be observed to perform its proper control function or produce a correct signal output.
5. Metering Circuits. All metering circuits shall be verified to operate correctly from voltage and current sources, similarly to protective relay circuits.
6. Acceptance Tests. Complete acceptance tests shall be performed, after the station installation is completed, on all assemblies, equipment, conductors, and control and protective systems, as applicable, to verify the integrity of all the systems.

7. Relays and Metering Utilizing Phase Differences. All relays and metering that use phase differences for operation shall be verified by measuring phase angles at the relay under actual load conditions after operation commences.

B. Test Report. A test report covering the results of the tests required in the Pre-Energization and Operating Tests shall be delivered to the Engineer prior to energization. Acceptance Testing shall be in accordance with NETA ATS-2021, *Standard for Acceptance Testing Specifications for Electrical Power Equipment and Systems*, published by the InterNational Electrical Testing Association. Tests shall be provided by both the manufacturer representative and independent third-party NETA accredited testing agency where required.

2.02 FIELD TESTS BY MANUFACTURER'S OR SUPPLIERS

A. All field tests shall be performed by the Manufacturers or Suppliers.

2.03 TEST REQUIREMENTS

A. The following test requirements supplement test and acceptance criteria that may be stated elsewhere.
   1. Lighting: Switching. Circuitry is in accordance with panel schedules. All interior and exterior lighting shall be checked for proper operation.
   2. Activate ground fault tripping by operating test features provided with ground current protective systems and by injecting a known and reasonable current in the ground current sensor circuit. In general, ground fault tripping should occur at a ground current equivalent to 20 percent of phase current. Current injection is not required of circuit 400 amperes or less.

B. Low Voltage Cables-600 volts Maximum
   1. Visual and Mechanical Inspection
      a. Compare cable data with Drawings and Specifications.
      b. Inspect exposed sections of cables for physical damage and correct connection in accordance with single-line diagram.
      c. Inspect bolted electrical connections for high resistance using one of the following methods:
         1) Use of low-resistance ohmmeter
         2) Verify tightness of accessible bolted electrical connections by calibrated torque-wrench method in accordance with manufacturer's published data or NETA ATS Table 100.12.
      d. Inspect compression-applied connectors for correct cable match and indentation.
      e. Inspect for correct identification and arrangements.
      f. Inspect cable jacket insulation and condition.
   2. Electrical Tests
      a. Perform insulation-resistance test on each conductor with respect to ground and adjacent conductors. Applied potential shall be 500 volts dc for 300 volt rated cable and 1000 volts dc for 600 volt rated cable. Test duration shall be 1 minute.
         1) Motor feeders tested with motors disconnected and controller open.

2) Motor control circuits tested and verified for proper operation with control stations and overcurrent devices connected.
3) Panelboard feeders tested with feeder breaker open and panelboard connected. If a lighting transformer is associated with the panelboard, it shall be connected and the test made for both primary and secondary sides.
4) Conductors of main lighting feeders, including lighting panel with branch circuits open.
5) Prior to performing insulation resistance tests on cables, verify that they are not connected to a solid state device.
6) Equipment which may be damaged during this test shall be disconnected.
7) The Engineer shall be consulted if minimum insulation values cannot be obtained.

b. Perform resistance measurements through all bolted connections with low-resistance ohmmeter, if applicable.
c. Perform continuity test to ensure correct cable connection.
d. Perform the following industry-standard operational and performance tests on each Category 6 Ethernet cable as detailed in ANSI/EIA-568-C:
1) Wire map (pass/fail)
2) Propagation delay (pass/fail)
3) Delay skew (pass/fail)
4) Cable length
5) Insertion loss (attenuation)
6) Return loss (pass/fail)
7) Near-end crosstalk (NEXT) (pass/fail)
8) Power sum near-end crosstalk (PSNEXT) (pass/fail)
9) Equal level far-end crosstalk (ELFEXT)
10) Power sum equal level far-end crosstalk (PSELFEXT).

3. Test Values - Visual and Mechanical
a. Compare bolted connection resistance to values of similar connections. Investigate values which deviate from those of similar bolted connections by more than 50 percent of the lowest value.
b. Bolt-torque levels shall be in accordance with NETA ATS Table 100.12 unless otherwise specified by the manufacturer.

4. Test Values - Electrical
a. Compare bolted connection resistance values to values of similar connections. Investigate values which deviate from those of similar bolted connections by more than 50 percent of the lowest value.
b. Insulation-resistance values shall be in accordance with manufacturer's published data. In the absence of manufacturer's published data, use NETA ATS Table 100.1. Values of insulation resistance less than this table or manufacturer's recommendations shall be investigated.
c. Cable shall exhibit continuity.
d. Deviations in resistance between parallel conductors shall be investigated.
e. Compare Category 6 Ethernet test values against TIA 568-C for determination of pass/fail status.

C. Low Voltage Safety Switches

1. Visual and Mechanical Inspection
   a. Compare equipment nameplate data with drawings and specifications.
   b. Inspect physical and mechanical condition.
   c. Inspect anchorage, alignment, grounding, and required clearances.
   d. Verify the unit is clean.
   e. Verify correct blade alignment, blade penetration, travel stops, and mechanical operation.
   f. Verify that fuse sizes and types are in accordance with drawings, short-circuit studies, and coordination study.
   g. Verify that each fuse has adequate mechanical support and contact integrity.
   h. Inspect bolted electrical connections for high resistance using one or more of the following methods:
      1) Use of a low-resistance ohmmeter.
      2) Verify tightness of accessible bolted electrical connections by calibrated torque-wrench method in accordance with manufacturer's published data or NETA ATS Table 100.12
   i. Verify operation and sequencing of interlocking systems.
   j. Verify correct phase barrier installation.
   k. Verify correct operation of all indicating and control devices.
   l. Verify appropriate lubrication on moving current-carrying parts and on moving and sliding surfaces.
2. Electrical Tests
   a. Perform resistance measurements through bolted electrical connections with a low-resistance ohmmeter, if applicable.
   b. Measure contact resistance across each switchblade and fuse holder.
   c. Perform insulation-resistance tests for one minute on each pole, phase-to-phase and phase-to ground with switch closed, and across each open pole. Apply voltage in accordance with manufacturer's published data. In the absence of manufacturer's published data, use NETA ATS Table 100.1
   d. Measure fuse resistance.
3. Test Values – Visual and Mechanical
   a. Compare bolted connection resistance values to values of similar connections. Investigate values which deviate from those of similar bolted connections by more than 50 percent of the lowest value.
   b. Bolt-torque levels shall be in accordance with manufacturer's published data. In the absence of manufacturer's published data, use NETA ATS Table 100.12.
4. Test Values – Electrical
   a. Compare bolted connection resistance values to values of similar connections. Investigate values which deviate from those of similar bolted connections by more than 50 percent of the lowest value.
   b. Microohm or dc millivolt drop values shall not exceed the high levels of the normal range as indicated in the manufacturer's published data. If manufacturer's published data is not available, investigate values that

deviate from adjacent poles or similar switches by more than 50 percent of the lowest value.

c. Insulation-resistance values shall be in accordance with manufacturer's published data. In the absence of manufacturer's published data, use NETA ATS Table 100.1. Values of insulation resistance less than this table or manufacturer's recommendations should be investigated. Dielectric withstand voltage tests shall not proceed until insulation-resistance levels are raised above minimum values.

d. Investigate fuse-resistance values that deviate from each other by more than 15 percent.

D. Molded and Insulated Case Circuit Breakers

1. Visual and Mechanical Inspection
   a. Compare equipment nameplate data with drawings and specifications.
   b. Inspect physical and mechanical condition.
   c. Inspect anchorage and alignment.
   d. Verify the unit is clean.
   e. Operate the circuit breaker to insure smooth operation.
   f. Inspect bolted electrical connections for high resistance using one or more of the following methods:
      1) Use of a low-resistance ohmmeter.
      2) Verify tightness of accessible bolted electrical connections by calibrated torque-wrench method in accordance with manufacturer's published data or NETA ATS Table 100.12
   g. Inspect operating mechanism, contacts, and arc chutes in unsealed units.
   h. Perform adjustments for final protective device settings in accordance with the coordination study.
2. Electrical Tests
   a. Perform resistance measurements through bolted connections with a low-resistance ohmmeter.
   b. Perform insulation-resistance tests for one minute on each pole, phase-to-phase and phase-to ground with the circuit breaker closed, and across each open pole. Apply voltage in accordance with manufacturer's published data. In the absence of manufacturer's published data, use NETA ATS Table 100.1.
   c. Perform a contact/pole-resistance test.
   d. Determine long-time pickup and delay by primary current injection.
   e. Determine short-time pickup and delay by primary current injection.
   f. Determine ground-fault pickup and time delay by primary current injection.
   g. Determine instantaneous pickup by primary current injection.
   h. Test functions of the trip unit by means of secondary injection.
   i. Perform minimum pickup voltage tests on shunt trip and close coils in accordance with manufacturer's published data.
   j. Verify correct operation of auxiliary features such as trip and pickup indicators, zone interlocking, electrical close and trip operation, trip-free, anti-pump function, and trip unit battery condition. Reset all trip logs and indicators

k. Verify operation of charging mechanism.

3. Test Values – Visual and Mechanical
   a. Compare bolted connection resistance values to values of similar connections. Investigate values which deviate from those of similar bolted connections by more than 50 percent of the lowest value.
   b. Bolt-torque levels shall be in accordance with manufacturer's published data. In the absence of manufacturer's published data, use NETA ATS Table 100.12.
   c. Settings shall comply with coordination study recommendations.
4. Test Values – Electrical
   a. Compare bolted connection resistance values to values of similar connections. Investigate values which deviate from those of similar bolted connections by more than 50 percent of the lowest value.
   b. Insulation-resistance values shall be in accordance with manufacturer's published data. In the absence of manufacturer's published data, use NETA ATS Table 100.1. Values of insulation resistance less than this table or manufacturer's recommendations should be investigated.
   c. Microohm or dc millivolt drop values shall not exceed the high levels of the normal range as indicated in the manufacturer's published data. If manufacturer's published data is not available, investigate values that deviate from adjacent poles or similar breakers by more than 50 percent of the lowest value.
   d. Insulation-resistance values of control wiring shall not be less than two megohms.
   e. Long-time pickup values shall be as specified, and the trip characteristic shall not exceed manufacturer's published time-current characteristic tolerance band, including adjustment factors. If manufacturer's curves are not available, trip times shall not exceed the value shown in NETA ATS Table 100.7.
   f. Short-time pickup values shall be as specified, and the trip characteristic shall not exceed manufacturer's published time-current tolerance band.
   g. Ground fault pickup values shall be as specified, and the trip characteristic shall not exceed manufacturer's published time-current tolerance band.
   h. Instantaneous pickup values shall be as specified and within manufacturer's published tolerances. In the absence of manufacturer's published data, refer to NETA ATS Table 100.8.
   i. Pickup values and trip characteristics shall be within manufacturer's published tolerances.
   j. Minimum pickup voltage of the shunt trip and close coils shall conform to the manufacturer's published data. In the absence of the manufacturer's published data, refer to NETA ATS Table 100.20.
   k. Breaker open, close, trip, trip-free, anti-pump, and auxiliary features shall function as designed.
   l. The charging mechanism shall operate in accordance with manufacturer's published data.

E. Instrument Transformers

1. Visual and Mechanical inspection
    a. Compare equipment nameplate data with drawings and specifications.
    b. Inspect physical and mechanical condition.
    c. Verify correct connection of transformers with system requirements.
    d. Verify that adequate clearances exist between primary and secondary circuit wiring.
    e. Verify the unit is clean.
    f. Inspect bolted electrical connections for high resistance using one or more of the following methods:
        1) Use of a low-resistance ohmmeter.
        2) Verify tightness of accessible bolted electrical connections by calibrated torque-wrench method in accordance with manufacturer's published data or NETA ATS Table 100.12
    g. Verify that all required grounding and shorting connections provide contact.
    h. Verify correct operation of transformer withdrawal mechanism and grounding operation.
    i. Verify correct primary and secondary fuse sizes for voltage transformers.
    j. Verify appropriate lubrication on moving current-carrying parts and on moving and sliding surfaces.
2. Electrical Tests – Current Transformers
    a. Perform resistance measurements through bolted connections with a low-resistance ohmmeter.
    b. Perform insulation-resistance test of each current transformer and its secondary wiring with respect to ground at 1000 volts dc for one minute. For units with solid-state components that cannot tolerate the applied voltage, follow manufacturer's recommendations.
    c. Perform a polarity test of each current transformer in accordance with ANSI/IEEE C57.13.1.
    d. Perform a ratio-verification test using the voltage or current method in accordance with ANSI/IEEE C57.13.1.
    e. Perform an excitation test on transformers used for relaying applications in accordance with ANSI/IEEE C57.13.1.
    f. Measure current circuit burdens at transformer terminals in accordance with ANSI/IEEE C57.13.1.
    g. When applicable, perform insulation-resistance tests on the primary winding with the secondary grounded. Test voltages shall be in accordance with NETA ATS Table 100.5.
    h. Perform dielectric withstand tests on the primary winding with the secondary grounded. Test voltages shall be in accordance with NETA ATS Table 100.9.
    i. Perform power-factor or dissipation-factor tests in accordance with test equipment manufacturer's published data.
    j. Verify that current transformer secondary circuits are grounded and have only one grounding point in accordance with ANSI/IEEE C57.13.3. That grounding point should be located as specified by the engineer in the project drawings.

3. Electrical Tests – Voltage Transformers
    a. Perform resistance measurements through bolted connections with a low-resistance ohmmeter.
    b. Perform insulation-resistance tests winding-to-winding and each winding-to-ground. Test voltages shall be applied for one minute in accordance with NETA ATS Table 100.5. For units with solid state components that cannot tolerate the applied voltage, follow manufacturer's recommendations.
    c. Perform a polarity test on each transformer to verify the polarity marks or H1- X1 relationship as applicable.
    d. Perform a turns-ratio test on all tap positions.
    e. Measure voltage circuit burdens at transformer terminals.
    f. Perform a dielectric withstand test on the primary windings with the secondary windings connected to ground. The dielectric voltage shall be in accordance with NETA ATS Table 100.9. The test voltage shall be applied for one minute.
    g. Perform power-factor or dissipation-factor tests in accordance with test equipment manufacturer's published data.
    h. Verify that voltage transformer secondary circuits are grounded and have only one grounding point in accordance with ANSI/IEEE C57.13.3. The grounding point should be located as specified by the engineer in the project drawings.
4. Test Values – Visual and Mechanical
    a. Compare bolted connection resistance values to values of similar connections. Investigate values which deviate from those of similar bolted connections by more than 50 percent of the lowest value.
    b. Bolt-torque levels shall be in accordance with manufacturer's published data. In the absence of manufacturer's published data, use NETA ATS Table 100.12.
5. Test Values – Current Transformers
    a. Compare bolted connection resistance values to values of similar connections. Investigate values which deviate from those of similar bolted connections by more than 50 percent of the lowest value.
    b. Insulation-resistance values of instrument transformers shall not be less than values shown in NETA ATS Table 100.5.
    c. Polarity results shall agree with transformer markings.
    d. Ratio errors shall be in accordance with C57.13.
    e. Excitation results shall match the curve supplied by the manufacturer or be in accordance with ANSI C57.13.1.
    f. Measured burdens shall be compared to instrument transformer ratings.
    g. Insulation-resistance values of instrument transformers shall be in accordance with manufacturer's published data. In the absence of manufacturer's published data, use NETA ATS Table 100.5.
    h. If no evidence of distress or insulation failure is observed by the end of the total time of voltage application during the dielectric withstand test, the primary winding is considered to have passed the test.

i. Power-factor or dissipation-factor values shall be in accordance with manufacturer's published data. In the absence of manufacturer's published data, use test equipment manufacturer's published data.
j. Test results shall indicate that the circuits have only one grounding point.

6. Test Values – Voltage Transformers
   a. Compare bolted connection resistance values to values of similar connections. Investigate values which deviate from those of similar bolted connections by more than 50 percent of the lowest value.
   b. Insulation-resistance values of instrument transformers shall not be less than values shown in NETA ATS Table 100.5.
   c. Polarity results shall agree with transformer markings.
   d. Ratio errors shall be in accordance with C57.13.
   e. Measured burdens shall be compared to instrument transformer ratings.
   f. If no evidence of distress or insulation failure is observed by the end of the total time of voltage application during the dielectric withstand test, the primary windings are considered to have passed the test.
   g. Power-factor or dissipation-factor values shall be in accordance with manufacturer's published data. In the absence of manufacturer's published data, use test equipment manufacturer's published data.
   h. Test results shall indicate that the circuits are grounded at only one point.

F. Metering Devices
1. Visual and Mechanical Inspection
   a. Compare equipment nameplate data with drawings and specifications.
   b. Inspect meters and cases for physical damage.
   c. Clean front panel and remove shipping restraint material.
   d. Verify tightness of electrical connections.
   e. Record model number, serial number, firmware revision, software revision, and rated control voltage.
   f. Verify operation of display and indicating devices.
   g. Record passwords.
   h. Verify unit is grounded in accordance with manufacturer's instructions.
   i. Verify unit is connected in accordance with manufacturer's instructions and project drawings.
   j. Set all required parameters including instrument transformer ratios, system type, frequency, power demand methods/intervals, and communications requirements.
2. Electrical Tests
   a. Apply voltage or current as appropriate to each analog input and verify correct measurement and indication.
   b. Confirm correct operation and setting of each auxiliary input/output feature including mechanical relay, digital, and analog.
   c. After initial system energization, confirm measurements and indications are consistent with loads present.
3. Test Values – Visual and Mechanical
   a. Nameplate data shall be per drawings and specifications.

b. Tightness of electrical connections shall assure a low resistance connection.
c. Display and indicating devices shall operate per manufacturer's published data.

4. Test Values – Electrical
   a. Measurement and indication of applied values of voltage and current shall be within manufacturer's published tolerances for accuracy.
   b. All auxiliary input/output features shall operate per settings and manufacturer's published data.
   c. Measurements and indications shall be consistent with energized system loads.

G. Grounding System
1. Visual and Mechanical Inspection
   a. Verify ground system is in compliance with drawings, specifications, and NFPA 70 National Electrical Code Article 250.
   b. Inspect physical and mechanical condition.
   c. Inspect bolted electrical connections for high resistance using one or more of the following methods:
      1) Use of low-resistance ohmmeter.
      2) Verify tightness of accessible bolted electrical connections by calibrated torque-wrench method in accordance with manufacturer's published data or NETA ATS Table 100.12.
   d. Inspect anchorage.
2. Electrical Tests
   a. Perform resistance measurements through bolted connections with a low-resistance ohmmeter.
   b. Perform fall-of-potential or alternative test in accordance with ANSI/IEEE 81 on the main grounding electrode or system.
   c. Perform point-to-point tests to determine the resistance between the main grounding system and all major electrical equipment frames, system neutral, and derived neutral points.
3. Test Values – Visual and Mechanical
   a. Grounding system electrical and mechanical connections shall be free of corrosion.
   b. Compare bolted connection resistance values to values of similar connections. Investigate values which deviate from those of similar bolted connections by more than 50 percent of the lowest value.
   c. Bolt-torque levels shall be in accordance with manufacturer's published data. In the absence of manufacturer's published data, use NETA ATS Table 100.12.
4. Test Values – Electrical
   a. Compare bolted connection resistance values to values of similar connections. Investigate values which deviate from those of similar bolted connections by more than 50 percent of the lowest value.
   b. The resistance between the main grounding electrode and ground shall be no greater than five ohms for large commercial or industrial systems and one ohm or less for generating or transmission station grounds

unless otherwise specified by the owner. (Reference ANSI/IEEE Standard 142)

c. Investigate point-to-point resistance values that exceed 0.5 ohm.

H. Battery System – Valve-Regulated Lead Acid

1. Visual and Mechanical Inspection Plan
   a. Verify that batteries are adequately located.
   b. Verify that battery area ventilation system is operable.
   c. Verify existence of suitable eyewash equipment.
   d. Compare equipment nameplate data with drawings and specifications.
   e. Inspect physical and mechanical condition.
   f. Verify adequacy of battery support racks or cabinets, mounting, battery spill containment system, anchorage, alignment, grounding, and clearances.
   g. Verify electrolyte level. Measure pilot-cell electrolyte temperature.
   h. Verify the units are clean.
   i. Verify application of an oxide inhibitor on battery terminal connections.
   j. Inspect bolted electrical connections for high resistance using one or more of the following methods:
      1) Use of a low-resistance ohmmeter.
      2) Verify tightness of accessible bolted electrical connections by calibrated torque-wrench method in accordance with manufacturer's published data or NETA ATS Table 100.12
2. Electrical Tests
   a. Perform resistance measurements through all bolted connections with a low-resistance ohmmeter.
   b. Measure negative post temperature.
   c. Measure charger float and equalizing voltage levels. Adjust to battery manufacturer's recommended settings.
   d. Verify all charger functions and alarms.
   e. Measure each cell voltage and total battery voltage with charger energized and in float mode of operation.
   f. Measure intercell connection resistances.
   g. Perform internal ohmic measurement tests.
   h. Perform a load test in accordance with manufacturer's published data or ANSI/IEEE 1106.
   i. Measure the battery system voltage from positive-to-ground and negative-to-ground.
3. Test Values – Visual and Mechanical
   a. Compare bolted connection resistance values to values of similar connections. Investigate values which deviate from those of similar bolted connections by more than 50 percent of the lowest value.
   b. Bolt-torque levels shall be in accordance with manufacturer's published data. In the absence of manufacturer's published data, use NETA ATS Table 100.12.
4. Test Values – Electrical
   a. Compare bolted connection resistance values to values of similar connections. Investigate values which deviate from those of similar bolted connections by more than 50 percent of the lowest value.

b. Negative post temperature shall be within manufacturer's published data or IEEE 1188.
c. Charger float and equalize voltage levels shall be in accordance with battery manufacturer's published data.
d. The results of charger functions and alarms shall be in accordance with manufacturer's published data.
e. Cell voltages shall be in accordance with manufacturer's published data.
f. Compare bolted connection resistance values to values of similar connections. Investigate values which deviate from those of similar bolted connections by more than 50 percent of the lowest value.
g. Cell internal ohmic values (resistance, impedance, or conductance) shall not vary by more than 25 percent between identical cells that are in a fully charged state, or shall be in accordance with manufacturer's published data.
h. Results of load tests shall be in accordance with manufacturer's published data or ANSI/IEEE 1188.
i. Voltage measured from positive to ground shall be similar in magnitude to the voltage measured from negative to ground.

I. Battery Chargers
1. Visual and Mechanical Inspection Plan
a. Compare equipment nameplate data with drawings and specifications.
b. Inspect physical and mechanical condition.
c. Inspect anchorage, alignment, and grounding.
d. Verify the units are clean.
e. Inspect bolted electrical connections for high resistance using one or more of the following methods:
1) Use of a low-resistance ohmmeter.
2) Verify tightness of accessible bolted electrical connections by calibrated torque-wrench method in accordance with manufacturer's published data or NETA ATS Table 100.12
f. Inspect filter and tank capacitors.
g. Verify operation of cooling fans and presence of filters.
2. Electrical Tests
a. Perform resistance measurements through all bolted connections with a low-resistance ohmmeter.
b. Verify float voltage, equalize voltage, and high voltage shutdown settings.
c. Verify current limit.
d. Verify correct load sharing (parallel chargers).
e. Verify calibration of meters in accordance with NETA ATS Section 7.11.
f. Verify operation of alarms.
g. Measure and record input and output voltage and current.
h. Measure and record ac ripple current and voltage imposed on the battery.
i. Perform full-load testing of charger.
3. Test Values – Visual and Mechanical

a. Compare bolted connection resistance values to values of similar connections. Investigate values which deviate from those of similar bolted connections by more than 50 percent of the lowest value.
b. Bolt-torque levels shall be in accordance with manufacturer's published data. In the absence of manufacturer's published data, use NETA ATS Table 100.12.

4. Test Values – Electrical
   a. Compare bolted connection resistance values to values of similar connections. Investigate values that deviate from those of similar bolted connections by more than 50 percent of the lowest value.
   b. Float and equalize voltage settings shall be in accordance with the battery manufacturer's published data.
   c. Current limit shall be within manufacturer's recommended maximum.
   d. Results of load sharing between parallel chargers shall be in accordance with system design specifications.
   e. Results of meter calibration shall be in accordance with manufacturer's published data.
   f. Results of alarm operation shall be in accordance with manufacturer's published data and system design.
   g. Input and output voltage shall be in accordance with manufacturer's published data.
   h. AC ripple current and voltage imposed on the battery shall be in accordance with manufacturer's published data.
   i. Charger shall be capable of manufacturer's specified full load.

J. Standby Generator System
1. Visual and Mechanical Inspection
   a. Compare equipment nameplate data with drawings and specifications.
   b. Inspect physical and mechanical condition.
   c. Inspect anchorage, alignment, and grounding.
   d. Verify the unit is clean.
   e. Inspect for blockage of ventilating passageways.
   f. Inspect for proper operation of jack water heaters.
   g. Inspect integrity of engine cooling and fuel supply systems.
   h. Verify that there is no excessive mechanical and electrical noise.
   i. Inspect for overheating of engine or generator.
   j. Inspect proper installation of vibration isolators.
   k. Inspect proper cooling liquid type and level
2. Electrical and Mechanical Tests
   a. Perform insulation-resistance tests in accordance with ANSI/IEEE Standard 43.
      1) Machines larger than 200 horsepower (150 kilowatts): Test duration shall be ten minutes. Calculate polarization index.
      2) Machines 200 horsepower (150 kilowatts) and less: Test duration shall be one minute. Calculate the dielectric-absorption ratio
   b. Test protective relay devices in accordance with paragraph 0.
   c. Verify phase rotation, phasing, and synchronized operation as required by the application.

d. Functionally test engine shutdown for low oil pressure, overtemperature, overspeed, and other protection features as applicable.
e. Conduct performance test in accordance with ANSI/NFPA 110.
f. Verify correct functioning of the governor and regulator.

3. Test Values – Visual and Mechanical
   a. Anchorage, alignment, and grounding should be in accordance with manufacturer's published data and system design.
4. Test Values – Electrical
   a. The recommended minimum insulation resistance (IR 1 min) test results in megohms shall be in accordance with NETA ATS Table 100.11
      1) The polarization index value shall not be less than 2.0.
      2) The dielectric absorption ratio shall not be less than 1.4.
   b. Protective relay device test results shall be in accordance with paragraph 0.
   c. Phase rotation, phasing, and synchronizing shall be in accordance with system design requirements.
   d. Low oil pressure, overtemperature, overspeed, and other protection features shall operate in accordance with manufacturer's published data and system design requirements.
   e. Vibration levels shall be in accordance with manufacturer's published data and shall be compared to baseline data.
   f. Performance tests shall conform to manufacturer's published data and ANSI/NFPA Standard 110.
   g. Governor and regulator shall operate in accordance with manufacturer's published data and system design requirements.

K. Automatic Transfer Switch
1. Visual and Mechanical Inspection
   a. Compare equipment nameplate data with drawings and specifications.
   b. Inspect physical and mechanical condition.
   c. Inspect anchorage, alignment, grounding, and required clearances.
   d. Verify the unit is clean.
   e. Verify appropriate lubrication on moving current-carrying parts and on moving and sliding surfaces.
   f. Verify that manual transfer warnings are attached and visible.
   g. Verify tightness of all control connections.
   h. Inspect bolted electrical connections for high resistance using one or more of the following methods:
      1) Use of a low-resistance ohmmeter.
      2) Verify tightness of accessible bolted electrical connections by calibrated torque-wrench method in accordance with manufacturer's published data or NETA ATS Table 100.12.
   i. Perform manual transfer operation.
   j. Verify positive mechanical interlocking between normal and alternate sources.
2. Electrical Tests
   a. Perform resistance measurements through bolted connections with a low-resistance ohmmeter.

b. Perform insulation-resistance tests on all control wiring with respect to ground. Applied potential shall be 500 volts dc for 300-volt rated cable and 1000 volts dc for 600-volt rated cable. Test duration shall be one minute. For units with solid-state components or for control devices that cannot tolerate the applied voltage, follow manufacturer's recommendation.
c. Perform a contact/pole-resistance test.
d. Verify settings and operation of control devices.
e. Calibrate and set all relays and timers in accordance with paragraph 0.
f. Verify phase rotation, phasing, and synchronized operation as required by the application.
g. Perform automatic transfer tests:
    1) Simulate loss of normal power.
    2) Return to normal power.
    3) Simulate loss of emergency power.
    4) Simulate all forms of single-phase conditions.
h. Verify correct operation and timing of the following functions:
    1) Normal source voltage-sensing and frequency-sensing relays.
    2) Engine start sequence.
    3) Time delay upon transfer.
    4) Alternate source voltage-sensing and frequency-sensing relays.
    5) Automatic transfer operation.
    6) Interlocks and limit switch function.
    7) Time delay and retransfer upon normal power restoration.
    8) Engine cool down and shutdown feature.

3. Test Values – Visual and Mechanical
    a. Compare bolted connection resistance values to values of similar connections. Investigate values which deviate from those of similar bolted connections by more than 50 percent of the lowest value.
    b. Bolt-torque levels shall be in accordance with manufacturer's published data. In the absence of manufacturer's published data, use NETA ATS Table 100.12.
4. Test Values – Electrical
    a. Compare bolted connection resistance values to values of similar connections. Investigate values which deviate from those of similar bolted connections by more than 50 percent of the lowest value.
    b. Insulation-resistance values of control wiring shall not be less than two megohms.
    c. Microhm or dc millivolt drop values shall not exceed the high levels of the normal range as indicated in the manufacturer's published data. If manufacturer's published data is not available, investigate values that deviate from adjacent poles or similar switches by more than 50 percent of the lowest value.
    d. Control devices shall operate in accordance with manufacturer's published data.
    e. Relay test results shall be in accordance with paragraph 0.
    f. Phase rotation, phasing, and synchronization shall be in accordance with system design specifications.

g. Automatic transfers shall operate in accordance with manufacturer's design.
h. Operation and timing shall be in accordance with manufacturer's and system design requirements

L. Test ground fault interrupter (GFI) receptacles and circuit breakers for proper operation by methods sanctioned by the receptacle manufacturer.

M. A functional test and check of electrical components is required prior to performing subsystem testing and commissioning. Compartments and equipment shall be cleaned as required by other provisions of these Specifications before commencement of functional testing. Functional testing shall comprise:
1. Visual and physical check of cables, circuit breakers, transformers, and connections associated with each item of new and modified equipment.
2. Verification that electrical equipment has been labeled with Arc Flash protection boundary and PPE levels, as required by Section 16961.
3. Setting of protective relays in conformance with results of the Short Circuit Study required by Section 16961 and testing of relays to assure that relays will trip at the current value and time required by the Study.
4. Circuit Breakers:
a. Circuit breakers that have adjustable time or pick-up settings for ground current, instantaneous overcurrent, short-time overcurrent, or long-time overcurrent, shall be field-adjusted by a representative of the circuit breaker manufacturer.
b. Time and pickup setting shall correspond to the recommendations of the Short Circuit Study.
c. Setting shall be tabulated and proven for each circuit breaker in its installed position.
d. Test results shall be certified by the person performing the tests and shall be submitted to the Engineer.

N. Subsystem testing for each phase of construction shall occur after the proper operation of alarm and status contacts has been demonstrated or otherwise accepted by the Owner and after process control devices have been adjusted as accurately as possible. Alarm conditions shall be simulated for each alarm point, and alarm indicators shall be checked for proper operation. It is intended that the Contractor will adjust limit switches and level switches to their operating points prior to testing and will set pressure switches, flow switches, and timing relays as dictated by operating results.

O. Subsystems shall be defined as individual and groups of pumps, conveyor systems, chemical feeders, air conditioning units, ventilation fans, air compressors, etc.

P. After initial settings have been completed, each subsystem shall be operated in the manual mode and it shall be demonstrated that operation is in compliance with the Contract Documents. Once the manual mode of operation has been proven, automatic operation shall be demonstrated to verify such items as proper start and stop sequence of pumps, proper operation of valves, proper speed control, etc.

Q. Voltage Field Test:

1. Check and record voltage at point of termination of San Diego Gas and Electric supply system after the installation is essentially complete and has been made operational.
2. Check and record voltage amplitude and balance between phases for loaded and unloaded conditions.
3. Unbalance Corrections:
   a. Notify the Owner if balance (as defined by NEMA) exceeds 1%, or if voltage varies throughout the day and from loaded to unloaded condition more than plus or minus 4% of nominal.
4. Voltage Balance Report:
   a. Submit Voltage Balance Report for each switchboard, distribution panel-board, load center, motor control center, and transformer.

R. Equipment Line Current Tests:
1. Check and record line current in each phase for each major piece of electrically-operated equipment.
2. Make a line current check after San Diego Gas and Electric made final adjustments to supply voltage magnitude or balance.
3. If any phase current for any piece of equipment is above rated nameplate current, prepare a supplement to the Equipment Line Current Report that identifies any causes of problems and corrective action that was taken.
4. Submit Equipment Line Current Report for each point of connection to motors, transformers, branch circuit distribution connections, and incoming utility service connection.

2.04 TEST REPORTS

A. The test report shall include the following:
1. Summary of project.
2. Description of equipment tested.
3. Description of test.
4. Test data.
5. Analysis and recommendations.

B. Test data records shall include the following minimum requirements:
1. Identification of the testing organization.
2. Equipment identification.
3. Humidity, temperature, and other atmospheric conditions that may affect the results of the tests/calibrations.
4. Date of inspections, tests, maintenance, and/or calibrations.
5. Identification of the testing technician.
6. Indication of inspections, tests, maintenance, and/or calibrations to be performed and recorded.
7. Indication of expected results when calibrations are to be performed.
8. Indication of "as-found" and "as-left" results.
9. Sufficient spaces to allow all results and comments to be indicated.

C. The Contractor shall submit the complete report to the Engineer for review.

PART 3 - EXECUTION

3.01 FIELD TESTS

A. The Contractor shall provide ten Working Days' notice to the Owner prior to any field testing to permit witnessing of the testing.

TEST RECORD SHEETS

The test record sheets listed below are provided as an example to demonstrate the minimum requirements to be included on test record sheets for electrical equipment and of the electrical installation as required by these specifications. Sample copies of each sheet are attached.

Sheet No.	Title
1	Insulation Resistance (Power, Control Wire, and Cable) Test Record
2	Insulation Resistance (Instrument Wire and Cable) Test Record
3	Not Used
4	Ground Electrode Testing Test Record
5	Not Used
6	Bonding Resistance Readings (Nonelectrical Equipment/Structures) Test Record
7	Bonding Resistance Readings (Electrical Equipment) Test Record
8	Not Used
9	Insulation Resistance (Equipment) Test Record
10	Not Used
11	Equipment Absorption Ratio and Polarization Index Test Record
12	Not Used
13	Electric Motor Run-In Test Record
14	Not Used
15	Ethernet Cable Test Record

INSULATION RESISTANCE
(POWER, CONTROL WIRE, AND CABLE)
TEST RECORD

TEST EQUIPMENT: _____ TEST VOLTAGE: _____

TEST EQUIPMENT: _____ TEST VOLTAGE: _____

AMBIENT TEMPERATURE: _____ ºC _____ ºF DATE: _____

NOTES:
1. Perform Insulation Resistance Test (megger) between each conductor and all other conductors and metallic sheath for cables with nonshielded conductors. Test between each conductor and shield for multiconductor cables with shielded conductors. Record lowest reading for each cable.
2. Use 1,000-V test set for cable rated 600 volts and 2,500-V test set for cable rated over 600 volts.
3. Readings will vary inversely with temperature and cable length. When the use of temperature correction factors is specified, attach a second sheet with computed values. Indicate on each sheet “measured” or “temperature corrected.”

Panel No. Circuit No. Feeder No.	Wire Tagging	Cable Rated Voltage	Wire or Cable				Insulation Resistance (megohms) *	Initials
			Quantity	Size	From	To		

*Minimum acceptable values:

Cable Rated Voltage	Test Duration	Resistance for Cable Only	Cable/Wire Size or Amperage (megohms)	Resistance When Cable Connected to Equipment (ohms)

DISTRIBUTION:

CONTRACTOR/Date _____

INSULATION RESISTANCE
(INSTRUMENT WIRE AND CABLE)
TEST RECORD

TEST EQUIPMENT: _____ TEST VOLTAGE: _____

TEST EQUIPMENT: _____ TEST VOLTAGE: _____

AMBIENT TEMPERATURE: _____ ºC _____ ºF DATE: _____

NOTES:
1. Record only the lowest value.
2. MP - Multi-pair cable. SP - Single pair cable.
3. Megger with instruments disconnected.
4. Use 250 volt (or lower voltage, when specified) range on DC test set.
5. Readings will vary with temperature and cable length.

Cable Number or Instrument Number	Indicate MP or SP Type (2)	Conductor to Conduit (Single Pair Non-Shielded Cables) (megohms)	Conductor to Conductor (megohms) (1)	Shield to Conductor to Shield (megohms) (1)	Overall Shield to Shield (Multipair Cables Only) (megohms) (1)	Lead and Armor (Multipair Cables Only) (megohms)	Shield to Conduit (Single Pair Cables Only) (megohms)	Initials

DISTRIBUTION:

CONTRACTOR/Date _____

GROUND ELECTRODE TESTING
TEST RECORD

TEST EQUIPMENT: _____ _____
(Note 1) (Note 2)
REFERENCE DRAWING: _____ _____

NOTES: 1. Record resistance-to-earth for each electrode with all other conductors disconnected. Resistance not to exceed 25 ohms for any single anode.

2. Check continuity from each electrode to any test bar or other electrode such that the complete ground loop is tested.

Rod Number	Resistance to Earth (ohms)	Ambient Temperature (ºC/ºF)	Weather	Taps	Initials/Date

DISTRIBUTION:

CONTRACTOR/Date _____

BONDING RESISTANCE READINGS
(NONELECTRICAL EQUIPMENT/STRUCTURES)
TEST RECORD

TEST EQUIPMENT USED: _____ WEATHER: _____

NOTES: 1. Vessels, tanks, and structural steel bonded to the main grounding system, dedicated ground rod or foundation, as indicated on drawings listed below.

2. Measure resistance from ground wiretap (or anchor bolt) to tagged equipment frame or structural steel.

EQUIPMENT TAG NO. OR STRUCTURE	DRAWING	MEASURED RESISTANCE (ohms)	INITIALS/DATE

DISTRIBUTION:

CONTRACTOR/Date _____

BONDING RESISTANCE READINGS
(ELECTRICAL EQUIPMENT)
TEST RECORD

TEST EQUIPMENT USED: _____ WEATHER: _____

NOTES: 1. Electrical equipment bonded to the main grounding system or dedicated ground rod, as indicated on drawings listed below.

2. Measure resistance from ground wiretap to tagged equipment bus bars, tagged equipment enclosures, and any other points indicated on the drawings.

EQUIPMENT TAG NO. OR STRUCTURE	DRAWING	MEASURED RESISTANCE (ohms)	INITIALS/DATE

DISTRIBUTION:

CONTRACTOR/Date _____

INSULATION RESISTANCE (EQUIPMENT)
TEST RECORD

TEST EQUIPMENT: _____ SUBSTATION: _____

AMBIENT TEMPERATURE: _____ ºC _____ ºF DATE: _____

REFERENCE DRAWING: _____ REF. SEC.: _____

NOTES: 1. Use 1,000-V test set for equipment rated 600 volts and below, 2,500/5,000-V test set for equipment rated over 600 volts.

2. For equipment with solid state control circuits, consult manufacturer's literature for maximum test voltages.

Switchgear or MCC (or other)	INSULATION RESISTANCE (megohms) *						Test Voltage (kV)	Rated Voltage (kV)	Initials/Date
	∅A to G	∅B to G	∅C to G	∅A to ∅B	∅B to ∅C	∅C to ∅A			

*Minimum acceptable values:

EQUIPMENT VOLTAGE CLASS	RESISTANCE (megohms)

TESTER'S INITIALS/DATE _____

DISTRIBUTION:

CONTRACTOR/Date _____

EQUIPMENT ABSORPTION RATIO AND POLARIZATION INDEX
TEST RECORD

TEST EQUIPMENT: _____ TEST VOLTAGE: _____

AMBIENT TEMPERATURE: _____ ºC _____ ºF DATE: _____

EQUIP. TEMP., IF KNOWN: _____ ºC _____ ºF REL. HUMIDITY: _____

NOTES: 1. Perform test as indicated on Test Records for each individual equipment type. Reference the following sheets:

Transformers	8
Equipment	9
Motors and Generators	10

2. Absorption Ratio $= \frac{\text{1-Minute Resistance Value}}{\text{30-Second Resistance Value}}$

3. Polarization Index $= \frac{\text{10-Minute Resistance Value}}{\text{1-Minute Resistance Value}}$

OHMS TO GROUND 30-SECOND READING ∅A TO GROUND	OHMS TO GROUND 1-MINUTE READING ∅A TO GROUND	OHMS TO GROUND 10-MINUTE READING ∅A TO GROUND	DIELECTRIC ABSORPTION RATIO	POLARIZATION INDEX
OHMS TO GROUND 30-SECOND READING ∅B TO GROUND	OHMS TO GROUND 1-MINUTE READING ∅B TO GROUND	OHMS TO GROUND 10-MINUTE READING ∅B TO GROUND	DIELECTRIC ABSORPTION RATIO	POLARIZATION INDEX
OHMS TO GROUND 30-SECOND READING ∅C TO GROUND	OHMS TO GROUND 1-MINUTE READING ∅C TO GROUND	OHMS TO GROUND 10-MINUTE READING ∅C TO GROUND	DIELECTRIC ABSORPTION RATIO	POLARIZATION INDEX

TESTER'S INITIALS/DATE _____

DISTRIBUTION:

CONTRACTOR/Date _____

ELECTRIC MOTOR RUN-IN
TEST RECORD

TEST EQUIPMENT: _____ REFERENCE DRAWING: _____

NOTES: 1. Duration of tests to comply with specifications.

TEST	REMARKS	INITIALS/DATE
RESISTANCE: Bonding resistance measured from motor frame to main ground/earth system tap. _____ ohms		
VOLTAGE: Actual voltage measured at Motor Control Center. _____ volts		
ROTATION CHECK: Bump motor to verify rotation. Motor to be uncoupled.		
NO LOAD CURRENT: At beginning of test _____ amps At end of test _____ amps		
TEMPERATURE OF BEARING: Check bearing for high temperature: Before start: 15 minutes after start 30 minutes after start 1 hour after start 2 hours after start 3 hours after start		
VIBRATION: Make visual inspection during run-test. Record any unusual vibration in remarks column.		
NOISE: Record any unusual noise in remarks column.		

DISTRIBUTION:

CONTRACTOR/Date _____

CATEGORY 6 ETHERNET CABLE ASSEMBLY
TEST RECORD

Date/Time: _____ Operator: _____

Cable Type: _____ Test Equipment Model: _____

Cable ID: _____ Test Equipment Calibration Date: _____

Cable Length (ft):		
Propagation Delay (ns):	[Worst Pair]	Pass/Fail
Delay Skew (ns):	[Worst Pair]	Pass/Fail
Insertion Loss (dB): Frequency (MHz):	[Worst Pair]	Pass/Fail
Return Loss (dB): Frequency (MHz):	[Worst Pair]	Pass/Fail
Wire Map	1 2 3 4 5 6 7 8 | | | | | | | | 1 2 3 4 5 6 7 8	Pass/Fail
Worst Pair NEXT (dB): Frequency (MHz):	[Worst Case Margin] [Worst Case Value]	Pass/Fail
Worst Pair PSNEXT (dB): Frequency (MHz):	[Worst Case Margin] [Worst Case Value]	Pass/Fail
Worst Pair ELFEXT (dB): Frequency (MHz):	[Worst Case Margin] [Worst Case Value]	Pass/Fail
Worst Pair PSELFEXT (dB): Frequency (MHz):	[Worst Case Margin] [Worst Case Value]	Pass/Fail

END OF SECTION

SECTION 16961

POWER SYSTEM STUDIES

PART 1 - GENERAL

1.01 SECTION INCLUDES

A. Provisions: Applicable provisions of Section 16010 become a part of this Section as if repeated herein.

1.02 SCOPE OF WORK

A. Obtain the services of an independent firm to provide complete Short-Circuit and Protective Device Coordination studies, and Arc Flash Risk Assessment for the electrical system as defined below. The firm performing the work shall have been regularly engaged in short-circuit and protective device coordination services for a period of at least 10 years.

B. The firm performing the work shall be responsible for the collection of all data required to perform the studies, including the electrical utility company's short-circuit current contribution.

C. For the purpose of this specification Section, the "Electrical System" shall be defined as the entire power distribution system, including the utility company's main service disconnect down through the main circuit breaker on each 240/120VAC and 208/120 VAC panelboard of all distributed branch circuits. Some equipment not modified as part of this contract is required to be included in the studies defined in this Section. Items within the "Electrical System" are comprised of:
   1. All utility transformers
   2. All medium voltage to low voltage transformers
   3. All 480 VAC generators, transfer switches, switchboards, panelboards, distribution, power conditioning, motor control, and motors
   4. All 480-208 VAC and 480-240 VAC transformers feeding panelboards
   5. All 208 VAC and 240 VAC panelboards.
   6. All 120V control panels.

D. The Short-Circuit Study shall provide for the calculation of fault currents at each piece of gear in the Electrical System for the entire Site. Fault currents shall be calculated for scenarios of utility and standby power, as outlined in this Section.

E. The Protective Device Coordination Study shall include trip characteristics for all protective devices in the Site Electrical System, from the utility company's main service disconnect through the main circuit breaker on each 208/120 VAC panelboard of all distributed branch circuits. Trip characteristics shall be analyzed for scenarios of utility and standby power, as outlined in this Section.

F. The Arc Flash Risk Assessment shall provide for arc flash incident energy calculations at all panels as required by IEEE 1584 (2018 Edition) and NFPA 70E.

G. Reports:

1. Reports for the Short-Circuit Study, Protective Device Coordination Study, and Arc Flash Risk Assessment shall be stamped and signed by a California Registered Electrical Engineer.
2. Report calculations shall be generated by a software analysis application with proven accuracy and reliability at performing 3-phase fault calculations.

1.03 REFERENCE STANDARDS

A. Institute of Electrical and Electronics Engineers, Inc. (IEEE)

B. American National Standards Institute (ANSI)

C. The National Fire Protection Association (NFPA)

D. InterNational Electrical Testing Association (NETA) Standard for Acceptance Testing Specifications (ATS)

E. NFPA 70E, Standard for Electrical Safety in the Workplace

F. IEEE 1584 (2018 Edition), Guide for Performing Arc-Flash Hazard Calculations

G. Occupational Safety and Health Administration (OSHA) (29 CFR PART 1910), Occupational Safety and Health Standards for General Industry

1.04 SUBMITTALS

A. Submit data in accordance with the Product Review category of the General Conditions and the submittal requirements of Section 16010.

B. Submit credentials of firm performing the studies to demonstrate sufficient experience with performing this type of work, as specified herein.

C. Preliminary: Preliminary Short-Circuit Study, Protective Device Coordination Study, and Arc Flash Risk Assessment shall be submitted to the Engineer for review prior to release of equipment drawings for manufacturing. If formal completion of the studies may cause delay in equipment manufacturing, approval from the Engineer may be obtained for preliminary submittal of sufficient study data to ensure that the selection of device and characteristics will be satisfactory.

D. Results of the Short-Circuit Study, Protective Device Coordination Study, and Arc Flash Risk Assessment shall be summarized in a final report. Submit hardbound copies of the complete final report and one digital copy in PDF on a CD. Electronic delivery shall contain full searchable text, and include any computer models developed for the studies at no additional cost.

E. Sample arc flash warning labels for each piece of equipment. Submit copies of labels at full size, with all required information as calculated by the Arc Flash Risk Assessment.

1.05 DATA COLLECTION

A. The firm performing the Short-Circuit Study, Protective Device Coordination Study, and Arc Flash Risk Assessment shall furnish the Contractor with a listing of required data. The Contractor shall collect and furnish all required data. The Contractor shall expedite collection of the data to eliminate unnecessary delays and assure completion of the studies as required for final acceptance of the

equipment shop drawings and/or prior to the release of the equipment for manufacturing.

1.06 MANUFACTURERS' SERVICES

A. The switchgear manufacturer shall furnish the services of a qualified field engineer and necessary tools and equipment in order to test, calibrate, and adjust the protective relays and circuit breaker trip devices as recommended in the Protective Device Coordination study.

PART 2 - PRODUCTS (NOT USED)

PART 3 - EXECUTION

3.01 GENERAL REQUIREMENTS

A. The Short-Circuit Study and Protective Device Coordination Study shall be performed as outlined in InterNational Electrical Testing Association (NETA) Standard for Acceptance Testing Specifications, Section 6 with exceptions as included in this Section.

B. In order to select relays and fuse characteristics as required for optimum coordination, the coordination study shall be performed as soon as the vendors for the new electrical equipment are identified. Relays and fuse selection by the power distribution equipment suppliers shall be based on the results of the favorably reviewed study.

C. The studies shall be submitted to the Engineer for acceptance before final acceptance of power distribution equipment submittals and before any settings are made on equipment.

D. The final report for the Short-Circuit Study, Protective Device Coordination Study, and Arc Flash Risk Assessment shall be bound in a standard 8 1/2-inch by 11 inch sized report. The selection of all protective relay types, current transformers, and fuse types and ratings shall be the responsibility of the manufacturer and shall be based on the preliminary draft of the coordination study, which shall be submitted with the equipment shop drawings (or earlier). The studies shall be accepted by the Engineer before any equipment is shipped. See Paragraph 1.04 for submittal requirements.

E. The report shall include a single line diagram depicting the entire Electrical System included in the analysis. At a minimum, the single line diagram shall be on an 11-inch by 17-inch sheet, and include the following information:
   1. Equipment/bus tags which match the contract documents
   2. Equipment/bus ampacity ratings
   3. Motor horsepower
   4. Protective device frame rating, trip setting, and curve options, as applicable
   5. Transformer primary/secondary voltages, kVA rating, and impedance
   6. Conductor materials, insulation types, and lengths

F. The studies shall be run on each of the following scenarios:
   1. Utility power

2. Generator power

3.02 SHORT-CIRCUIT STUDY

A. Provide a complete Short-Circuit Study. The study shall include, but shall not be limited to, the following, as applicable:
1. Full compliance with applicable ANSI and IEEE Standards.
2. Performed on nationally recognized computer software, such as ETAP or SKM Power Tools.
3. Overall system impedance diagram. The diagram shall include the power company's impedance and X/R ratios and circuit element impedances (e.g., transformers, generators, motors, VFDs, feeders, distribution buses as applicable).
4. Available three phase and ground fault asymmetrical and symmetrical short-circuit fault currents at each piece of electrical equipment, bus, transformer, etc.
5. The momentary and interrupting rating of all elements of the distribution system shall be listed. The maximum available short-circuit fault current available at each element shall be calculated.
6. Executive summary describing the distribution system, the procedures used to develop the study, utility related information furnished by the utility company, including the name and telephone number of the individual supplying the information, identification of all assumptions made in the preparation of the study, identification of any problem areas, and a definitive statement concerning the adequacy of the distribution system to interrupt and withstand the maximum possible short-circuit fault current.
7. Computer printouts for the three phase, single phase and ground fault studies. Printouts shall indicate the short-circuit fault current available at each major equipment and distribution bus within the medium and low voltage distribution systems.

3.03 PROTECTIVE DEVICE COORDINATION STUDY

A. Provide a complete Protective Device Coordination Study. The Protective Device Coordination Study shall include, but shall not be limited to:
1. Utility protective devices.
2. Service entrance and distribution switchgear.
3. Medium and low voltage power system transformers.
4. Low voltage switchgear, switchboards, power distribution panels and motor control centers.
5. Power factor correction and harmonic mitigation equipment.
6. Motor starters and variable frequency drives.
7. Standby generators.
8. A tabulation of all the settings for every over current protective device, timer, power system relays (e.g., ANSI 50, 51), circuit breaker, recommended fuse and current transformer ratings, etc.
9. Transformer excitation current.
10. Motor and cable damage curves in accordance with the manufacturer's recommendations.
11. Select relay types (e.g., inverse, very inverse, extremely inverse, overcurrent with or without voltage restraint, timers), current transformer ratings and types, fuse, residually or zero sequence connected ground faults protection,

etc. that will allow the system to be protected within the equipment fault ratings and provide the maximum possible coordination between the protective devices.

12. Provide recommended settings for protective devices, such as relays and circuit breakers, to achieve the best selectivity to minimize system disturbances during fault clearing.
13. Provide a complete set of time-current coordination curves on log-log paper for every protective relay, circuit breaker, fuse, timer, etc. serving or located in the electrical equipment furnished for the project, including the utility protective devices. Provide a separate time-current curve for each unique feeder system, without displaying parallel devices powered from a common bus. The time-current curves shall display the coordination from the lowest device in the distribution system up through the utility's protective device. Clearly identify each device curve displayed on the graph, by color coding and text callouts. Include specific settings used for the curve (as applicable) in the text callout. A single line diagram depicting the portion of the distribution system under study shall appear with each curve. The minimum size log paper to be submitted shall be 11-inch by 17-inch.
14. Time current curves shall include transformer ANSI damage and inrush curves, cable damage curves, circuit breaker and fuse ratings and settings, protective relay settings, and any other information required by ANSI and good design practices. As a minimum, provide curves for:
    a. Each medium voltage and low voltage feeder down to 480-volt motor control centers and panelboards.
    b. Each main, tie and feeder circuit breakers located in medium voltage and low voltage switchgear, motor control centers and panelboard. Include the largest feeder circuit breaker in each motor control center and panelboard.
    c. Each ground fault protective device provided for the medium voltage and low voltage power distribution systems.

B. The report shall include a reference to any part of the Electrical System where selectivity cannot be achieved, and a brief explanation of the cause. Provide recommendations where applicable for alternate methods that would improve selectivity.

3.04 ARC FLASH RISK ASSESSMENT

A. Provide a detailed Arc Flash Risk Assessment. The analysis shall include, but shall not be limited to:
1. Determine potential arc flash incident energies, arc flash boundaries, shock hazard boundaries and proper personal protection equipment (PPE) for all energized electrical equipment.
2. The study shall determine worst-case scenarios for the arc flash energy level calculations, and any suggested changes to the protection scheme or equipment selection that will result in improved system reliability and safety.
3. The study shall indicate the worst-case values for each of the scenarios listed in Paragraph 3.01F. Provide values in tabular format including at a minimum, location of fault, incident energy, arc flash boundary, working distance, acting protective device, protective device activation time, and arcing fault current.
4. Provide executive summary, including introduction, methodology, information sources, key assumptions, NFPA 70E considerations and calculations.

5. Develop and install arc flash warning labels based on arc flash study results.

3.05 FIELD ADJUSTMENT

A. All field adjustment and modifications shall be performed in the presence of the Owner, before energizing equipment.

B. Adjust relay and protective device settings according to the recommended settings table provided by the coordination study. Field adjustments shall be completed by the equipment manufacturer.

C. Make minor modifications to equipment as required to accomplish conformance with Short-Circuit and Protective Device Coordination studies.

3.06 MODIFICATIONS

A. Notify the Owner in writing of any required major equipment modifications. Major modifications to the equipment shall not be allowed unless otherwise approved in writing by the Engineer and the Owner.

3.07 ARC FLASH WARNING LABELS

A. The vendor shall provide a 4 inch by 4 inch thermal transfer type label of high adhesion polyester for each work location analyzed. Labels shall be machine printed, with no field markings.

B. The label shall have an orange header, compliant with ANSI Z535, with the wording, "WARNING, SHOCK & ARC FLASH HAZARD", and shall include the following information:
   1. Location designation (equipment identification tag)
   2. Nominal voltage
   3. Arc flash boundary
   4. Incident energy at working distance (in calories/centimeter-squared)
   5. Working distance
   6. Shock boundaries
      a. Limited approach distance
      b. Restricted approach distance
   7. Required personal protective equipment,
   8. Engineering report number, revision number and issue date.
   9. Where voltage exceeds 600 VAC or incident energy is greater than 40 cal/cm2, label header shall be changed to "DANGER, SHOCK & ARC FLASH HAZARD."

C. Arc flash labels shall be provided in the following manner and all labels shall be based on recommended overcurrent device settings.
   1. For each 600, 480 and applicable 240 and 208 VAC panelboards and disconnects, one arc flash label shall be provided.
   2. For each industrial control panel, provide one arc flash label.
   3. For each transformer, provide one arc flash label at both the front and rear access points, as applicable.
   4. For each low voltage motor control center, at least one arc flash label shall be provided. Motor control centers larger than five sections shall bear one arc flash label for each five sections. Back-to-back or turned corner

configurations shall be treated as two motor control centers for the purpose of labeling.

5. For each 96-inches of low voltage switchboard, one arc flash label shall be provided.
6. For each standalone VFD or motor starter, one arc flash label shall be provided.
7. For each switchgear, provide one arc flash label for each the front and rear of the incoming compartment and one arc flash label on each compartment that houses a draw-out device.
8. For each medium voltage motor control center, provide one arc flash label each for the front and rear of the incoming compartment, one label for each individual starter or switch operating handle, and one label each for any draw-out power drawers.
9. Where equipment includes a "maintenance mode" bypass setting on a protective device as a temporary arc-flash reduction measure, provide one arc flash label at the applicable protective device which indicates the calculated values when maintenance mode is enabled. This label shall be clearly marked to indicate what it represents.

D. The Contractor shall affix the labels in accordance with the following:

1. Labels shall be in a clearly visible location on the front panel of the equipment near the incoming service or main protective device. Labels on equipment with bottom-entry incoming service shall be placed a minimum of 60-inches from the bottom of the equipment.
2. Labels affixed to outdoor equipment which includes an outer door and inner deadfront panel shall be placed on the deadfront panel to avoid fading due to exposure to the elements.
3. For labels affixed to removable compartment doors or covers, the removable cover shall be clearly marked to identify the specific compartment for which it is intended to be used.

3.08 ARC FLASH TRAINING

A. The equipment manufacturer shall provide arc flash training to the Owner's staff. At a minimum, the training shall include potential arc flash hazards associated with working on energized equipment and maintenance procedures in accordance with the requirements of NFPA 70E, Standard For Electrical Safety Requirements For Employee Workplaces. The training shall be recorded in a video format and provided on a DVD or solid-state media to the Owner.

END OF SECTION

THIS PAGE INTENTIONALLY BLANK

Appendix A

Building Permit Application Template

Daniel Zimny

From: Spencer Waldron
Sent: Tuesday, December 26, 2023 1:09 PM
To: Daniel Zimny
Subject: CBC2023-0108; 2351 GEODE LN
Attachments: B-2 Commercial Application FILLABLE 2022.pdf; B-59 PART 1 Waste Management Plan - FILLABLE 2022.pdf; B-61 Owner-Builder Acknowledgment 2022.pdf; CBC2023-0108 HAZMAT FORM.pdf

Follow Up Flag: Follow up
Flag Status: Flagged

Hello, your project is approved and ready to issue. Please read this email for instructions on how to pick up your permit.

Next steps:

1. Bring all documents listed below AND THIS EMAIL to the building counter (we cannot accept via email)
2. Payment of permit fees can be done online or in person
3. We will issue the permit to a licensed general contractor or owner/builder* (or their authorized agent)
4. PLEASE COME TO THE BUILDING COUNTER TO RECEIVE YOUR STAMPED PLANS AND JOB CARD NO APPOINTMENT NECESSARY (COUNTER HOURS ARE MONDAY THRU FRIDAY 8:00AM – 4:00PM FOR ISSUANCE)

All documents listed below must be brought in to the bulding counter at time of issuance. (we cannot accept via email).

1. B-1 OR B-2 APPLICATION INCOMPLETE: Please complete the attached permit application.
    a. *If Owner-Builder – Owner to complete Option B on page 2 of the application as well as completing the attached B-61 Owner-Builder Acknowledgement form. FOR more information on Owner/Builder see Contractors State License Board: https://www2.cslb.ca.gov/Consumers/Know_Risks_Of_Owner_-_Builder/

    b. If Contractor – Contractor to complete the contractor information on page 1 and Option A on page 2. If the contractor does not have a current City of Carlsbad business license, they can apply here: https://www.carlsbadca.gov/services/depts/finance/licenses/ Once applied, add confirmation number to section where the business license number would go.

2. COUNTY OF SAN DIEGO: Hazardous Materials Questionnaire (STAMPED BY APPLICABLE AGENCY IF REQUIRED)

    a. The responses to the submitted form (attached above) indicate that stamps from both the HMD and APCD are required.

3. B-59 WASTE MANAGEMENT FORM: Please complete Part 1 of the attached waste management plan and return to the building department.

1. PERMIT PAYMENT:

a. Due this being a city project, I have sent the invoice for the outstanding fee to our management analyst to work on tranferring the funds between departments.

Please do not email documents.

For questions on the permit issuance process, or to speak with a Building Technician, please email building@carlsbadca.gov

COMMERCIAL BUILDING PERMIT APPLICATION B-2

Plan Check _____
Est. Value _____
PC Deposit _____
Date _____

Job Address 2351 Geode Lane, Carlsbad CA 92009 **Suite:**_____ **APN:** 2131101400

Tenant Name #:_____ **Lot #:**_____ **Year Built:** 1999

Year Built:_____ **Occupancy:** None **Construction Type:**_____ **Fire sprinklers:** ○ YES ● NO **A/C:** ○ YES ● NO

BRIEF DESCRIPTION OF WORK: In-kind replacement of the existing 250-KW backup generator supporting the Poinsettia sewer lift station. Minor alterations to electrical and ductwork systems

☐ **Addition/New:**_____ New SF and Use, _____ New SF and Use
_____ SF Deck, _____ SF Patio Cover, _____ SF Other (Specify)_____

☐ **Tenant Improvement:** _____ SF, Existing Use: _____ Proposed Use: _____
_____ SF, Existing Use: _____ Proposed Use: _____

☐ **Pool/Spa:**_____ SF Additional Gas or Electrical Features? _____

☐ **Solar:**_____ KW, _____ Modules, Mounted: ○ Roof ○ Ground

☐ **Reroof:**_____

☑ **Plumbing/Mechanical/Electrical** Backup Generator Replacement

☐ **Other:** _____

APPLICANT (PRIMARY CONTACT)

Name:_____
Address:_____
City:_____ **State:**_____ **Zip:**_____
Phone:_____
Email:_____

PROPERTY OWNER

Name: Curtis Jackson
Address: 1200 Carlsbad Village Drive
City: Carlsbad **State:** CA **Zip:** 92008
Phone: 442-339-2836
Email: curtis.jackson@carlsbadca.gov

DESIGN PROFESSIONAL

Name: Kennedy Jenks Consultants
Address: 9325 Sky Park Court, Suite 300
City: San Diego **State:** CA **Zip:** 92123
Phone: 858-676-7528
Email: TimothyWaters@kennedyjenks.com
Architect State License: N/A

CONTRACTOR OF RECORD

Business Name:_____
Address:_____
City:_____ **State:**_____ **Zip:**_____
Phone:_____
Email:_____
CSLB License #:_____ **Class:**_____
Carlsbad Business License # (Required):_____

APPLICANT CERTIFICATION: I certify that I have read the application and state that the above information is correct and that the information on the plans is accurate. I agree to comply with all City ordinances and State laws relating to building construction.

NAME (PRINT): _____ **SIGN:**_____ **DATE:** _____

THIS PAGE REQUIRED AT PERMIT ISSUANCE **PLAN CHECK NUMBER:** CBC2023-0108

A BUILDING PERMIT CAN BE ISSUED TO EITHER A STATE LICENSED CONTRACTOR OR A PROPERTY OWNER. IF THE PERSON SIGNING THIS FORM IS AN AGENT FOR EITHER ENTITY AN AUTHORIZATION FORM OR LETTER IS REQUIRED PRIOR TO PERMIT ISSUANCE.

(OPTION A): LICENSED CONTRACTOR DECLARATION:

*I hereby affirm under penalty of perjury that I am licensed under provisions of Chapter 9 (commencing with Section 7000) of Division 3 of the Business and Professions Code, and my license is in full force and effect. I also affirm under penalty of perjury one of the following declarations (**CHOOSE ONE**):*

☐ I have and will maintain a certificate of consent to self-insure for workers' compensation provided by Section 3700 of the Labor Code, for the performance of the work which this permit is issued. Policy No._____

-OR-

☐ I have and will maintain worker's compensation, as required by Section 3700 of the Labor Code, for the performance of the work for which this permit is issued. My workers' compensation insurance carrier and policy number are: **Insurance Company Name:** _____

Policy No. _____ **Expiration Date:** _____

-OR-

☐ Certificate of Exemption: I certify that in the performance of the work for which this permit is issued, I shall not employ any person in any manner so as to become subject to the workers' compensation Laws of California. **WARNING: Failure to secure workers compensation coverage is unlawful and shall subject an employer to criminal penalties and civil fines up to $100,000.00, in addition the to the cost of compensation, damages as provided for in Section 3706 of the Labor Code, interest and attorney's fees.**

CONSTRUCTION LENDING AGENCY, IF ANY:

I hereby affirm that there is a construction lending agency for the performance of the work this permit is issued (Sec. 3097 (i) Civil Code).

Lender's Name:_____**Lender's Address:** _____

CONTRACTOR CERTIFICATION: I certify that I have read the application and state that the above information is correct and that the information on the plans is accurate. I agree to comply with all City ordinances and State laws relating to building construction.

NAME (PRINT): _____ **SIGNATURE:**_____**DATE:**_____

Note: If the person signing above is an authorized agent for the contractor provide a letter of authorization on contractor letterhead.

- OR -

(OPTION B): OWNER-BUILDER DECLARATION:

I hereby affirm that I am exempt from Contractor's License Law for the following reason:

☐ I, as owner of the property or my employees with wages as their sole compensation, will do the work and the structure is not intended or offered for sale (Sec. 7044, Business and Professions Code: The Contractor's License Law does not apply to an owner of property who builds or improves thereon, and who does such work himself or through his own employees, provided that such improvements are not intended or offered for sale. If, however, the building or improvement is sold within one year of completion, the owner-builder will have the burden of proving that he did not build or improve for the purpose of sale).

-OR-

☐ I, as owner of the property, am exclusively contracting with licensed contractors to construct the project (Sec. 7044, Business and Professions Code: The Contractor's License Law does not apply to an owner of property who builds or improves thereon, and contracts for such projects with contractor(s) licensed pursuant to the Contractor's License Law).

-OR-

☐ I am exempt under Business and Professions Code Division 3, Chapter 9, Article 3 for this reason:

_____

AND,

☐ FORM B-61 **"Owner Builder Acknowledgement and Verification Form"** is required for any permit issued to a property owner.

By my signature below I acknowledge that, except for my personal residence in which I must have resided for at least one year prior to completion of the improvements covered by this permit, I cannot legally sell a structure that I have built as an owner-builder if it has not been constructed in its entirety by licensed contractors. *I understand that a copy of the applicable law, Section 7044 of the Business and Professions Code, is available upon request when this application is submitted or at the following Web site: http://www.leginfo.ca.gov/calaw.html.*

OWNER CERTIFICATION: I certify that I have read the application and state that the above information is correct and that the information on the plans is accurate. I agree to comply with all City ordinances and State laws relating to building construction.

NAME (PRINT): _____ **SIGN:** _____ **DATE:** _____

Note: If the person signing above is an authorized agent for the property owner include form B-62 signed by property owner.

CONSTRUCTION WASTE MANAGEMENT PLAN
B-59

Development Services
Building Division
1635 Faraday Avenue
442-339-2719
www.carlsbadca.gov

APPLICABLE TO NEW CONSTRUCTION, ALL RESIDENTIAL ADDITIONS AND ALTERATIONS AND COMMERCIAL ADDITIONS AND ALTERATIONS OVER $200K. If you have questions about the recycling requirement or completing this form, please contact Republic Services at (760) 332-6464 a certified C&D recycler, or the Carlsbad Building Division at (442) 339-2700. **Please note:** Unless you are self-hauling, Republic Services or approved haulers must be used for all construction projects within the City of Carlsbad.

PART 1 Complete and submit this form when applying for a Building Permit. Note: Permits will not be issued without a completed Construction Waste Management Plan.

Applicant Information

Permit No._____ **Project Title** _____

Project Address_____ **APN** 2131101400

Applicant Name _____ Owner ☐ Contractor ☐ Architect ☐ Other ☐ _____
Last *First*

Applicant Address _____

Phone (_____)_____ **E-mail Address** _____

Applicant Mailing Address _____
(if different than project address)

Project Type *(check all that apply):* Residential ☐ Commercial ☐ Public Building ☐ Industrial ☐

Brief Description _____

Project Size_____ **Estimated Cost of Project $**_____
(square footage)

Please check the appropriate box:

☐ I plan on using REPUBLIC SERVICES roll-off bin(s) for all materials and will provide all receipts after construction.

☐ I plan on using a City Approved Hauler and will provide all receipts after construction.

☐ This is a proposed LEED certified project and I plan on separating materials on site in conjunction with Republic

Acknowledgement: I certify under penalty of perjury under the laws of the State of California that the information provided in and with this form pertains to construction and demolition debris generated only from the project listed in PART 1, that I have reviewed the accuracy of the information, and that the information is true and correct to the best of my knowledge and belief.

Print Name_____ **Signature**_____ **Date** _____

Rev. 05/22

PART 1 (cont'd)	Complete, obtain signature, and submit this form when applying for a Building Permit. Note: Permits will not be issued without a completed Construction Waste Management Plan.

DEBRIS RECYCLING ESTIMATE:

SECTION A **Permit No.** _____ **Project Title** Backup Generator Replacement

Project Address _____ **APN** _____

Applicant Name _____ **Phone** ( )

Last *First*

SECTION B **Complete the following table with estimated waste tonnage to be generated by your project.**

This is your plan for construction waste management. Changes can be made on the final recycle report.
Goal: the diversion rate shall be 65% by weights of debris.

Material Type	Estimated Waste Quantity (tons)	**A** Place a (ü) check next to items to be **reused or salvaged**	**B** Place a (ü) check next to items to be **recycled**	**C** Place a (ü) check next to items to be **disposed at landfill**
Complete this line of the table only if only using WASTE MANAGEMENT roll-off bins. **Mixed C&D Debris**		☐	☐	☐
Asphalt & Concrete		☐	☐	☐
Brick / Masonry / Tile		☐	☐	☐
Mixed Inert Debris		☐	☐	☐
Cabinets, Doors, Fixtures, Windows (circle all that apply)		☐	☐	☐
Carpet		☐	☐	☐
Carpet Padding / Foam		☐	☐	☐
Cardboard		☐	☐	☐
Ceiling Tile (acoustic)		☐	☐	☐
Drywall (used, new, scrap)		☐	☐	☐
Landscape Debris (brush, trees, stumps, etc.) No dirt.		☐	☐	☐
Unpainted Wood & Pallets		☐	☐	☐
Roofing Materials		☐	☐	☐
Scrap Metal		☐	☐	☐
Stucco		☐	☐	☐
Other: _____		☐	☐	☐
TOTAL	=			

SECTION C

To meet 65% Diversion Requirement (estimate) _____ x 0.65 = _____ tons

Total Estimated Waste from above *Minimum Required Diversion*

Contractor/Owner Signature _____ **Date** _____

Conversion Table for Common Construction Waste

This document is informational only. It is here to help you convert truckload quantities to tons, if necessary.

Category	Material	Column A Volume			Column B Tons/Unit		Column C Tons
Mixed Debris	Construction	_____	cy	x	0.18	=	_____
	Demolition	_____	cy	x	1.19	=	_____
Asphalt/Concrete	Asphalt (broken)	_____	cy	x	0.70	=	_____
	Concrete (broken)	_____	cy	x	1.20	=	_____
	Concrete (solid slab)	_____	cy	x	1.30	=	_____
Brick/Masonry/Tile	Brick (broken)	_____	cy	x	0.70	=	_____
	Brick (whole, palletized)	_____	cy	x	1.51	=	_____
	Masonry brick (broken)	_____	cy	x	0.60	=	_____
	Tile	_____	sq ft	x	0.00175	=	_____
Building Materials (cabinets, doors, windows, etc.)		_____	cy	x	0.15	=	_____
Cardboard (flat)		_____	cy	x	0.05	=	_____
Carpet	By square foot	_____	sq ft	x	0.0005	=	_____
	By cubic yard	_____	cy	x	0.30	=	_____
Carpet Padding/Foam		_____	sq ft	x	0.000125	=	_____
Ceiling Tiles	Whole (palletized)	_____	cy	x	0.0003	=	_____
	Loose	_____	cy	x	0.09	=	_____
Drywall (new or used)	1/2" (by square foot)	_____	sq ft	x	0.0008	=	_____
	5/8" (by square foot)	_____	sq ft	x	0.00105	=	_____
	Demo/used (by cu. yd.)	_____	cy	x	0.25	=	_____
Landscape Debris (brush, trees, etc.)		_____	cy	x	0.15	=	_____
Shingles, asphalt	Asphalt Composition Shingle	_____	cy	x	0.22	=	_____
Unpainted Wood/Pallets	By board foot	_____	bd ft	x	0.001375	=	_____
	By cubic yard	_____	cy	x	0.15	=	_____
Trash/Garbage		_____	cy	x	0.18	=	_____
Other (estimated weight)		_____	cy	x	estimate	=	_____
		_____	cy	x	estimate	=	_____
		_____	cy	x	estimate	=	_____
		_____	cy	x	estimate	=	_____
					Total all	=	_____

SAN DIEGO REGIONAL HAZARDOUS MATERIALS QUESTIONNAIRE

OFFICE USE ONLY
RECORD ID # _____
PLAN CHECK # _____
BP DATE ____/____/____

Business Name	Business Contact		Telephone #	
Project Address (include suite)	City	State	Zip Code	APN#
Mailing Address (include suite)	City	State	Zip Code	Plan File#
Project Contact	Applicant E-mail		Telephone #	

The following questions represent the facility's activities, NOT the specific project description.

PART I: FIRE DEPARTMENT – HAZARDOUS MATERIALS DIVISION: OCCUPANCY CLASSIFICATION: (not required for projects within the City of San Diego): Indicate by circling the item, whether your business will use, process, or store any of the following hazardous materials. If any of the items are circled, applicant must contact the Fire Protection Agency with jurisdiction prior to plan submittal.

Occupancy Rating:

1. Explosive or Blasting Agents
2. Compressed Gases
3. Flammable/Combustible Liquids
4. Flammable Solids
5. Organic Peroxides
6. Oxidizers
7. Pyrophorics
8. Unstable Reactives
9. Water Reactives
10. Cryogenics
11. Highly Toxic or Toxic Materials
12. Radioactives
13. Corrosives
14. Other Health Hazards
15. None of These.

Facility's Square Footage (including proposed project)**:**

PART II: SAN DIEGO COUNTY DEPARTMENT OF ENVIRONMENTAL HEALTH – HAZARDOUS MATERIALS DIVISION (HMD): If the answer to any of the questions is yes, applicant must contact the County of San Diego Hazardous Materials Division, 5500 Overland Avenue, Suite 170, San Diego, CA 92123. Call (858) 505-6700 prior to the issuance of a building permit.

FEES ARE REQUIRED Project Completion Date: Expected Date of Occupancy: (for new construction or remodeling projects)

	YES	NO	
1.	☐	☐	Is your business listed on the reverse side of this form? (check all that apply).
2.	☐	☐	Will your business dispose of Hazardous Substances or Medical Waste in any amount?
3.	☐	☐	Will your business store or handle Hazardous Substances in quantities greater than or equal to 55 gallons, 500 pounds and/or 200 cubic feet?
4.	☐	☐	Will your business store or handle carcinogens/reproductive toxins in any quantity?
5.	☐	☐	Will your business use an existing or install an underground storage tank?
6.	☐	☐	Will your business store or handle Regulated Substances (CalARP)?
7.	☐	☐	Will your business use or install a Hazardous Waste Tank System (Title 22, Article 10)?
8.	☐	☐	Will your business store petroleum in tanks or containers at your facility with a total facility storage capacity equal to or greater than 1,320 gallons? (California's Aboveground Petroleum Storage Act).

☐ CalARP Exempt
_____ / _____
Date Initials

☐ CalARP Required
_____ / _____
Date Initials

☐ CalARP Complete
_____ / _____
Date Initials

PART III: SAN DIEGO COUNTY AIR POLLUTION CONTROL DISTRICT (APCD): The following questions are intended to identify the majority of air pollution issues at the planning stage. Your project may require additional measures not identified by these questions. Some residential projects may be exempt from APCD requirements. If yes is answered for either questions 1, 2 or 5 or for more comprehensive requirements, please contact APCD at apcdcomp@sdcounty.ca.gov; (858) 586-2650; or 10124 Old Grove Road, San Diego, CA 92131.

	YES	NO	
1.	☐	☐	Will the project disturb 100 square feet or more of existing building materials?
2.	☐	☐	Will any load supporting structural members be removed?
3.	☐	☐	(ANSWER ONLY IF QUESTION 1 or 2 IS YES) Has an asbestos survey been performed by an individual that has passed an EPA-approved building inspector course?
4.	☐	☐	(ANSWER ONLY IF QUESTION 1 or 2 IS YES) Based on the survey results, will the project disturb any asbestos containing material? If yes, a notification may be required at least 10 working days prior to commencing asbestos removal. Additionally, a notification may be required prior to the removal of a load supporting structural member(s) regardless of the presence of asbestos.
5.	☐	☐	Will the project or associated construction equipment emit air contaminants? See the reverse side of this form for typical equipment requiring an APCD permit. If yes, contact APCD prior to the issuance of a building permit.
6.	☐	☐	(ANSWER ONLY IF QUESTION 5 IS YES) Will the project or associated construction equipment be located within 1,000 feet of a school boundary?

Briefly describe business activities:	Briefly describe proposed project:

I declare under penalty of perjury that to the best of my knowledge and belief the responses made herein are true and correct.

_____ _____ ____/____/____
Name of Owner or Authorized Agent Signature of Owner or Authorized Agent Date

FOR OFFICAL USE ONLY:

FIRE DEPARTMENT OCCUPANCY CLASSIFICATION: _____

BY: _____ DATE: ____/____/____

EXEMPT OR NO FURTHER INFORMATION REQUIRED		RELEASED FOR BUILDING PERMIT BUT NOT FOR OCCUPANCY		RELEASED FOR OCCUPANCY	
COUNTY-HMD*	APCD	COUNTY-HMD	APCD	COUNTY-HMD	APCD

*A stamp in this box **only** exempts businesses from completing or updating a Hazardous Materials Business Plan. Other permitting requirements may still apply

LIST OF BUSINESSES WHICH REQUIRE REVIEW AND APPROVAL FROM THE COUNTY OF SAN DIEGO DEPARTMENT OF ENVIRONMENTAL HEALTH – HAZARDOUS MATERIALS DIVISION

Check all that apply:

AUTOMOTIVE

- ☐ Battery Manufacturing/Recycling
- ☐ Boat Yard
- ☐ Car Wash
- ☐ Dealership Maintenance/Painting
- ☐ Machine Shop
- ☐ Painting
- ☐ Radiator Shop
- ☐ Rental Yard Equipment
- ☐ Repair/Preventive Maintenance
- ☐ Spray Booth
- ☐ Transportation Services
- ☐ Wrecking/Recycling

CHEMICAL HANDLING

- ☐ Agricultural supplier/distributor
- ☐ Chemical Manufacturer
- ☐ Chemical Supplier/Distributor
- ☐ Coatings/Adhesive
- ☐ Compressed Gas Supplier/Distributor
- ☐ Dry Cleaning
- ☐ Fiberglass/Resin Application
- ☐ Gas Station
- ☐ Industrial Laundry
- ☐ Laboratory
- ☐ Laboratory Supplier/Distributor
- ☐ Oil and Fuel Bulk Supply
- ☐ Pesticide Operator/Distributor

CHEMICAL HANDLING

- ☐ Photographic Processing
- ☐ Pool Supplies/Maintenance
- ☐ Printing/Blue Printing
- ☐ Road Coatings
- ☐ Swimming Pool
- ☐ Toxic Gas Handler
- ☐ Toxic Gas Manufacturer

METAL WORKING

- ☐ Anodizing
- ☐ Chemical Milling/Etching
- ☐ Finish-Coating/Painting
- ☐ Flame Spraying
- ☐ Foundry
- ☐ Machine Shop-Drilling/Lathes/Mills
- ☐ Metal Plating
- ☐ Metal Prepping/Chemical Coating
- ☐ Precious Metal Recovery
- ☐ Sand Blasting/Grinding
- ☐ Steel Fabricator
- ☐ Wrought Iron Manufacturing

AEROSPACE

- ☐ Aerospace Industry
- ☐ Aircraft Maintenance
- ☐ Aircraft Manufacturing

MISCELLANEOUS

- ☐ Asphalt Plant
- ☐ Biotechnology/Research
- ☐ Cannabis-related
  - ☐ Manufacturing ☐ Dispensary ☐ Other
- ☐ Co-Generation Plant
- ☐ Dental Clinic/Office
- ☐ Dialysis Center
- ☐ Emergency Generator
- ☐ Frozen Food Processing Facility
- ☐ Hazardous Waste Hauler
- ☐ Hospital/Convalescent Home
- ☐ Laboratory/Biological Lab
- ☐ Medical Clinic/Office
- ☐ Nitrous Oxide (NO_x) Control System
- ☐ Pharmaceuticals
- ☐ Public Utility
- ☐ Refrigeration System
- ☐ Rock Quarry
- ☐ Ship Repair/Construction
- ☐ Telecommunications Cell Site
- ☐ Veterinary Clinic/Hospital
- ☐ Wood/Furniture Manufacturing/Refinishing
- ☐ Brewery/Winery/Distillery

ELECTRONICS

- ☐ Electronic Assembly/Sub-Assembly
- ☐ Electronic Components Manufacturing
- ☐ Printed Circuit Board Manufacturing

NOTE: THE ABOVE LIST INCLUDES BUSINESSES, WHICH TYPICALLY USE, STORE, HANDLE, AND DISPOSE OF HAZARDOUS SUBSTANCES. ANY BUSINESS NOT INCLUDED ON THIS LIST, WHICH HANDLES, USES OR DISPOSES OF HAZARDOUS SUBSTANCES MAY STILL REQUIRE HAZARDOUS MATERIALS DIVISION (HMD) REVIEW OF BUSINESS PLANS. FOR MORE INFORMATION CALL (858) 505-6880.

LIST OF AIR POLLUTION CONTROL DISTRICT PERMIT CATEGORIES

Businesses, which include any of the following operations or equipment, will require clearance from the Air Pollution Control District.

CHEMICAL

47 – Organic Gas Sterilizers
32 – Acid Chemical Milling
33 – Can & Coil Manufacturing
44 – Evaporators, Dryers & Stills Processing Organic Materials
24 – Dry Chemical Mixing & Detergent Spray Towers
35 – Bulk Dry Chemicals Storage
55 – Chrome Electroplating Tanks

COATINGS & ORGANIC SOLVENTS

27 – Coating & Painting
37 – Plasma Arc & Ceramic Deposition Spray Booths
38 – Paint, Stain & Ink Mfg
27 – Printing
27 – Polyester Resin/Fiberglass Operations

METALS

18 – Metal Melting Devices
19 – Oil Quenching & Salt Baths
32 – Hot Dip Galvanizing
39 – Precious Metals Refining

ORGANIC COMPOUND MARKETING (GASOLINE, ETC)

25 – Gasoline & Alcohol Bulk Plants & Terminals
25 – Intermediate Refuelers
26 – Gasoline & Alcohol Fuel Dispensing

COMBUSTION

34 – Piston Internal – Combustion Engines
13 – Boilers & Heaters (1 million BTU/hr or larger)
14 – Incinerators & Crematories
15 – Burn Out Ovens
16 – Core Ovens
20 – Gas Turbines, and Turbine Test Cells & Stands
48 – Landfill and/or Digester Gas Flares

ELECTRONICS

29 – Automated Soldering
42 – Electronic Component Mfg

FOOD

12 – Fish Canneries
12 – Smoke Houses
50 – Coffee Roasters
35 – Bulk Flour & Powered Sugar Storage

SOLVENT USE

28 – Vapor & Cold Degreasing
30 – Solvent & Extract Driers
31 – Dry Cleaning

ROCK AND MINERAL

04 – Hot Asphalt Batch Plants
05 – Rock Drills
06 – Screening Operations
07 – Sand Rock & Aggregate Plants
08 – Concrete Batch, CTB, Concrete Mixers, Mixers & Silos
10 – Brick Manufacturing

OTHER

01 – Abrasive Blasting Equipment
03 – Asphalt Roofing Kettles & Tankers
46 – Reverse Osmosis Membrane Mfg
51 – Aqueous Waste Neutralization
11 – Tire Buffers
17 – Brake Debonders
23 – Bulk Grain & Dry Chemical Transfer & Storage
45 – Rubber Mixers
21 – Waste Disposal & Reclamation Units
36 – Grinding Booths & Rooms
40 – Asphalt Pavement Heaters
43 – Ceramic Slip Casting
41 – Perlite Processing
40 – Cooling Towers – Registration Only
91 – Fumigation Operations
56 – WWTP (1 million gal/day or larger) & Pump Station

NOTE: OTHER EQUIPMENT NOT LISTED HERE THAT IS CAPABLE OF EMITTING AIR CONTAMINANTS MAY REQUIRE AN AIR POLLUTION CONTROL DISTRICT PERMIT. IF THERE ARE ANY QUESTIONS, CONTACT THE AIR POLLUTION CONTROL DISTRICT AT (858) 586-2600.

Appendix B

Station As-Built Drawings for Reference Only

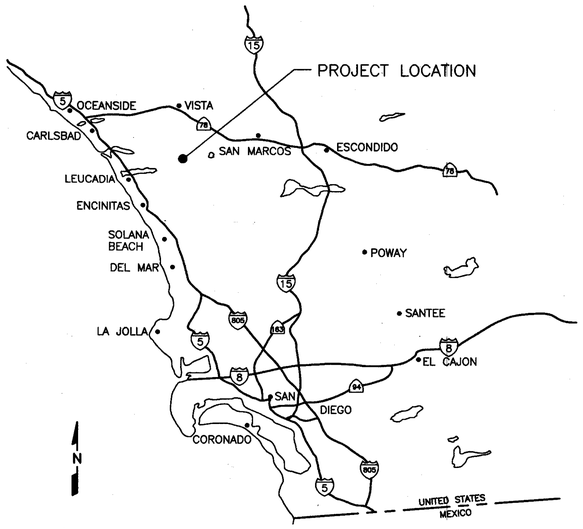

VICINITY MAP

NTS

PLANS FOR THE CONSTRUCTION OF THE POINSETTIA SEWAGE LIFT STATION IN THE CARLSBAD MUNICIPAL WATER DISTRICT

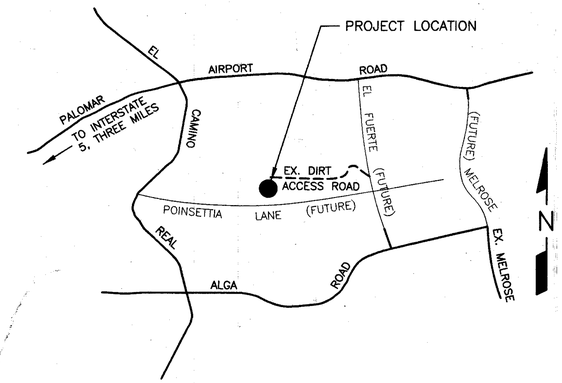

LOCATION MAP

NTS

INDEX OF DRAWINGS

SHEET NO.	DRAWING NO.	DESCRIPTION
1	G-1	TITLE SHEET
2	G-2	ABBREVIATIONS, NOTES, LEGEND, DESIGN DATA
3	C-1	CIVIL SITE PLAN
4	C-2	SITE PIPING PLAN
5	C-3	PIPING PROFILES
6	C-4	PIPING DETAILS
7	L-1	LANDSCAPING
8	L-2	LANDSCAPING
9	L-3	LANDSCAPING
10	L-4	PLANTING PLAN AND LEGEND
11	L-5	PLANTING DETAILS
12	A-1	LOWER FLOOR PLAN
13	A-2	UPPER FLOOR PLANS
14	A-3	ROOF PLANS AND SCHEDULES
15	A-4	GENERATOR BUILDING ELEVATIONS
16	A-5	PUMP BUILDING ELEVATIONS
17	A-6	BUILDING SECTIONS
18	A-7	BUILDING SECTIONS
19	A-8	ARCHITECTURAL DETAILS
20	A-9	ARCHITECTURAL DETAILS
21	S-1	GENERAL STRUCTURAL NOTES AND TYPICAL DETAILS
22	S-2	FOUNDATION PLAN PUMP BUILDING
23	S-3	FOUNDATION PLAN AND UPPER FLOOR PLAN
24	S-4	ROOF FRAMING PLANS
25	S-5	STRUCTURAL DETAILS
26	S-6	STRUCTURAL DETAILS
27	S-7	STRUCTURAL DETAILS
28	S-8	CRANE RUNWAY FRAMING PLAN
29	M-1	EQUIPMENT BUILDING PLAN, PUMP BUILDING PLAN
30	M-2	PUMP BUILDING PLAN - BELOW GRADE
31	M-3	MECHANICAL SECTIONS 1
32	M-4	MECHANICAL SECTIONS 2
33	M-5	MECHANICAL DETAILS 1
34	M-6	MECHANICAL DETAILS 2
35	M-7	MECHANICAL DETAILS 3
36	E-1	ELECTRICAL SYMBOLS AND ABBREVIATIONS
37	E-2	ELECTRICAL SITE PLAN
38	E-3	GRADE LEVEL POWER/SIGNAL PLAN
39	E-4	GRADE LEVEL LIGHTING PLAN
40	E-5	PUMP ROOM POWER/SIGNAL PLAN
41	E-6	PUMP ROOM LIGHTING PLAN
42	E-7	SINGLE LINE DIAGRAM AND ELEVATIONS
43	E-8	CONTROL DETAILS
44	E-9	DETAILS/CONTROL DIAGRAMS 1
45	E-10	CONTROL DIAGRAMS 2
46	E-11	CONTROL DIAGRAMS 3
47	E-12	DETAILS
48	E-13	CONDUIT AND CABLE SCHEDULE

DETAIL/SECTION CALLOUT SYSTEM

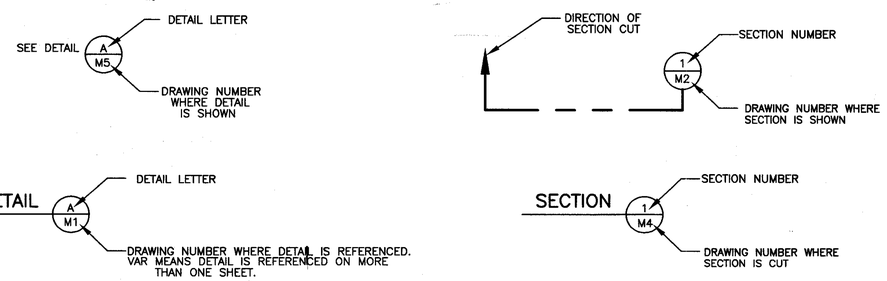

DECLARATION OF RESPONSIBLE CHARGE

I HEREBY DECLARE THAT I AM THE ENGINEER OF WORK FOR THIS PROJECT, THAT I HAVE EXERCISED RESPONSIBLE CHARGE OVER THE DESIGN OF THE PROJECT AS DEFINED IN SECTION 6703 OF THE BUSINESS AND PROFESSIONS CODE, AND THAT THE DESIGN IS CONSISTENT WITH CURRENT STANDARDS.

I UNDERSTAND THAT THE CHECK OF PROJECT DRAWINGS AND SPECIFICATIONS BY THE CARLSBAD MUNICIPAL WATER DISTRICT IS CONFINED TO A REVIEW ONLY AND DOES NOT RELIEVE ME, AS ENGINEER OF WORK, OF MY RESPONSIBILITIES FOR PROJECT DESIGN.

FIRM: WILSON ENGINEERING

ADDRESS: 703 PALOMAR AIRPORT ROAD, SUITE 300

CITY, ST.: CARLSBAD, CA 92009

BY: (DEXTER S. WILSON)

R.C.E. NO.: 33692

EXPIRATION DATE: 6/30/98

"AS BUILT"

DEXTER S. WILSON — DATE 6-18-99

RCE 33692 EXP. 06/30/2002

SEE LETTER TO CITY ENGINEER DATED

REVIEWED BY: INSPECTOR — DATE 6-25-99

REGISTERED PROFESSIONAL ENGINEER — DEXTER S. WILSON — 33692 — EXP. 6/30/98 — CIVIL — STATE OF CALIFORNIA

PLANS PREPARED BY

WILSON ENGINEERING

CONSULTING ENGINEERS

703 PALOMAR AIRPORT ROAD, SUITE 300

CARLSBAD, CA 92009 (619) 438-4422

DEXTER S. WILSON — DATE 6-16-97

DISTRICT APPROVED CHANGES

No.	Description	Approved	Date
1	AS - BUILT		

BENCH MARK

Description: STREET CENTERLINE MONUMENT

Location: STATION 249+07.56 P.O.C. ON EL CAMINO REAL

Record From: COUNTY OF SAN DIEGO R1800 (249+07.56)

Elevation: 307.874 Datum: M.S.L.

G-1

CARLSBAD MUNICIPAL WATER DISTRICT

SHEET 1 — ENGINEERING DEPARTMENT — 48 SHEETS

PLANS FOR THE IMPROVEMENT OF:

TITLE SHEET

POINSETTIA SEWAGE LIFT STATION

District Engineer WILLIAM E. PLUMMER — RCE 28176 — Date 6-23-97

REGISTRATION EXPIRES 3-31-98

Drawn PP

Checked AO

CMWD 95-402

PD 411 331-1E

GENERAL NOTES

1. SEWER MAIN AND APPURTENANCES SHALL BE CONSTRUCTED IN ACCORDANCE WITH THE "CARLSBAD MUNICIPAL WATER DISTRICT'S SEWER SYSTEM - DESIGN CRITERIA, STANDARD DRAWINGS AND SPECIFICATIONS", AND THE STANDARD SPECIFICATIONS, MARCH 1993, AND THE STANDARD SPECIFICATIONS FOR PUBLIC WORKS CONSTRUCTION, LATEST EDITION (GREEN BOOK).
2. THE CONTRACTOR SHALL OBTAIN AN EXCAVATION PERMIT FROM THE DIVISION OF INDUSTRIAL SAFETY BEFORE ANY EXCAVATION AND SHALL ADHERE TO ALL PROVISIONS OF THE STATE CONSTRUCTION SAFETY ORDERS.
3. BEFORE ANY CONNECTION TO THE DISTRICT'S EXISTING SYSTEM, A PERMIT SHALL BE OBTAINED FROM THE DISTRICT. IT MUST BE SIGNED AND APPROVED BY THE DISTRICT'S ENGINEER AND SUPERINTENDENT.
4. BEFORE CONSTRUCTION BEGINS IN ANY PUBLIC RIGHT OF WAY, A CITY RIGHT OF WAY PERMIT SHALL BE REQUIRED.
5. THE CONTRACTOR SHALL NOTIFY THE CARLSBAD MUNICIPAL WATER DISTRICT AT LEAST 48 HOURS PRIOR TO THE BEGINNING OF CONSTRUCTION. (TELEPHONE NO. (619) 438-3367).
6. ALL SEWER LINES AND APPURTENANCES SHALL BE INSPECTED AND APPROVED BY THE ENGINEERING INSPECTOR PRIOR TO BACKFILLING.

PROCEDURES FOR PROCESSING SHOP DRAWINGS, SUBMITTALS, CHANGE ORDERS, AND REQUESTS FOR INFORMATION

1. SHOP DRAWINGS, SUBMITTALS, AND CHANGE ORDERS SHALL BE PROCESSED IN ACCORDANCE WITH SECTION 2 AND 3 OF THE STANDARD SPECIFICATIONS FOR PUBLIC WORKS CONSTRUCTION, 1997 EDITION.
2. THE AGENCY IS THE CARLSBAD MUNICIPAL WATER DISTRICT.
3. THE ENGINEER IS THE DISTRICT ENGINEER FOR CARLSBAD MUNICIPAL WATER DISTRICT OR HIS APPROVED REPRESENTATIVE AT (760) 438-3367. NO CHANGES TO THE PLANS OR SPECIFICATIONS SHALL BE MADE WITHOUT APPROVAL OF THE ENGINEER.
4. THE ENGINEER OF WORK IS WILSON ENGINEERING AT (760) 438-4422.
5. THE PROJECT INSPECTOR IS THE ENGINEER'S REPRESENTATIVE FOR INSPECTION, AND ADMINISTRATION. THE PROJECT INSPECTOR IS ASSIGNED BY THE CITY OF CARLSBAD'S ENGINEERING INSPECTION SECTION AT (760) 438-3891.
6. WHEN SUBMITTED FOR THE ENGINEER'S REVIEW, SHOP DRAWINGS SHALL BEAR THE CONTRACTOR'S CERTIFICATION THAT HE HAS REVIEWED, CHECKED AND APPROVED THE SHOP DRAWINGS AND THAT THEY ARE IN CONFORMANCE WITH THE REQUIREMENTS OF THE CONTRACT DOCUMENTS. THE CONTRACTOR SHALL SUBSCRIBE TO AND SHALL PLACE THE FOLLOWING CERTIFICATION ON ALL SUBMITTALS:

   "I HEREBY CERTIFY THAT THE EQUIPMENT AND MATERIAL SHOWN AND MARKED IN THIS SUBMITTAL IS THAT PROPOSED TO BE INCORPORATED INTO THIS PROJECT, IS IN COMPLIANCE WITH THE CONTRACT DOCUMENTS, CAN BE INSTALLED IN THE ALLOCATED SPACES, AND IS SUBMITTED FOR APPROVAL.

   BY: _____ TITLE: _____

   DATE: _____ COMPANY NAME: _____
7. THE CONTRACTOR SHALL PROVIDE AND KEEP UP-TO-DATE A COMPLETE "AS-BUILT" RECORD SET OF BLUELINE PRINTS, WHICH SHALL BE CORRECTED IN RED DAILY AND SHOW EVERY CHANGE FROM THE ORIGINAL DRAWINGS AND SPECIFICATIONS AND THE EXACT "AS-BUILT" LOCATIONS, SIZES AND KINDS OF EQUIPMENT, UNDERGROUND PIPING, VALVES, AND ALL OTHER WORK NOT VISIBLE AT SURFACE GRADE. THIS SET OF DRAWINGS SHALL BE KEPT ON THE JOB SITE AND SHALL BE USED ONLY AS A RECORD SET AND SHALL BE DELIVERED TO THE PROJECT INSPECTOR UPON COMPLETION OF THE WORK. THE PROJECT INSPECTOR WILL SUBMIT THESE TO THE ENGINEER OF WORK TO PREPARE FINAL AS-BUILT DRAWINGS.
8. A PRE-CONSTRUCTION CONFERENCE SHALL BE HELD AT THE LOCATION, DATE, AND TIME DESIGNATED BY THE PROJECT INSPECTOR. THE MEETING SHALL BE ATTENDED BY THE ENGINEER OF WORK, THE OWNER'S REPRESENTATIVE, THE ENGINEER, THE PROJECT INSPECTOR, AND THE CONTRACTOR AND HIS SUPERINTENDENT AND ANY REPRESENTATIVES OF REGULATORY AGENCIES.
9. PROJECT MEETINGS SHALL BE ATTENDED BY THE ATTENDEES NAMES ABOVE. THE ENGINEER OF WORK WILL RECORD MINUTES OF EACH MEETING AND WILL FURNISH COPIES TO THE CONTRACTOR WITHIN FIVE WORKING DAYS THEREAFTER. IF THE CONTRACTOR DOES NOT SUBMIT WRITTEN OBJECTION TO THE CONTENTS OF SUCH MINUTES WITHIN SEVEN DAYS AFTER PRESENTATION TO HIM, IT SHALL BE UNDERSTOOD AND AGREED THAT THE CONTRACTOR ACCEPTS THE MINUTES AS A TRUE AND COMPLETE RECORD OF THE MEETING. THE DATES, TIMES AND LOCATIONS FOR THE VARIOUS MEETINGS SHALL BE AGREED UPON AT THE PRE-CONSTRUCTION CONFERENCE.
10. REQUESTS FOR INFORMATION, SUBMITTALS, AND REQUESTS FOR CHANGE ORDERS SHALL BE SUBMITTED TO THE PROJECT INSPECTOR. THE PROJECT INSPECTOR WILL COORDINATE THE RESPONSE THROUGH THE APPROPRIATE INDIVIDUALS BACK TO THE CONTRACTOR.

SPECIAL NOTES

1. CONTRACTOR IS RESPONSIBLE TO NOTIFY THE ENGINEER OF WORK WHENEVER THESE PLANS SEEM UNCLEAR. THIS NOTIFICATION SHALL BE MADE IN ADVANCE OF CONSTRUCTION TO ALLOW THE ENGINEER OF WORK ADEQUATE TIME TO RESPOND.
2. THE ENGINEER OF WORK IS NOT RESPONSIBLE FOR SUPERVISING GRADING OPERATIONS OR GRADING WORK DONE. THE CONTRACTOR IS SOLELY RESPONSIBLE. THE SOILS REPORT AND ALL THE SUPPLEMENTS THEREOF ARE INCORPORATED INTO AND MADE A PART OF THIS PLAN.
3. DEVIATIONS IN THE EXISTING ELEVATIONS SHOWN HEREON MAY EXIST AT THE TIME OF CONSTRUCTION. CONTRACTOR SHALL VERIFY EXISTING ELEVATIONS OF THE GROUND AT THE DAYLIGHT LINES, AND NOTIFY THE ENGINEER OF WORK SUFFICIENTLY IN ADVANCE OF THE GRADING WORK TO ALLOW FOR MODIFICATION OF THESE PLANS.
4. NO BLASTING SHALL BE DONE UNTIL PERMISSION IS OBTAINED FROM THE GOVERNING PUBLIC AGENCY. THE CONTRACTOR IS ALSO REQUIRED TO NOTIFY THE ENGINEER OF WORK PRIOR TO PERFORMING ANY ROCK REMOVAL OPERATIONS.
5. THE CONTRACTOR SHALL BE RESPONSIBLE FOR MAINTAINING ALL THE EROSION CONTROL FACILITIES THROUGHOUT THE DEVELOPMENT OF THE PROJECT.
6. FLOW LINE ELEVATIONS SHOWN HEREON WERE DETERMINED BY INTERPOLATION USING THE AERIAL TOPOGRAPHY. ACTUAL GROUND ELEVATIONS MAY VARY. CONTRACTOR IS RESPONSIBLE TO INSURE THAT ALL DRAINAGE GETS INTO LINED DITCHES AND REMAINS IN THE DITCH UNTIL DISCHARGED INTO UNDERGROUND DEVICES OR ENERGY DISSIPATORS.
7. NEITHER THE OWNER, NOR THE ENGINEER OF WORK WILL ENFORCE SAFETY MEASURES OR REGULATIONS. THE CONTRACTOR SHALL DESIGN, CONSTRUCT AND MAINTAIN ALL SAFETY DEVICES, INCLUDING SHORING, AND SHALL BE SOLELY RESPONSIBLE FOR CONFORMING TO ALL LOCAL, STATE, AND FEDERAL SAFETY AND HEALTH STANDARDS, LAWS AND REGULATIONS.
8. THE CONTRACTOR HAS SOLE AND COMPLETE RESPONSIBILITY FOR JOBSITE CONDITIONS DURING THE COURSE OF CONSTRUCTION OF THIS PROJECT, INCLUDING SAFETY OF ALL PERSONS AND PROPERTY, AND THAT THIS REQUIREMENT SHALL APPLY CONTINUOUSLY AND NOT BE LIMITED TO NORMAL WORKING HOURS; AND THAT THE CONTRACTOR SHALL DEFEND, INDEMNIFY AND HOLD THE ENGINEER HARMLESS FROM ANY AND ALL LIABILITY, REAL OR ALLEGED, IN CONNECTION WITH THE PERFORMANCE OF THE WORK ON THIS PROJECT, EXCEPTING LIABILITY ARISING FROM THE SOLE NEGLIGENCE OF THE ENGINEER, AND HEALTH STANDARDS, LAWS AND REGULATIONS.
9. LOCATION AND ELEVATION OF IMPROVEMENTS TO BE MET BY WORK PROPOSED ON THESE PLANS SHALL BE CONFIRMED BY FIELD MEASUREMENTS PRIOR TO CONSTRUCTION OF NEW WORK.
10. BEFORE EXCAVATING FOR THIS CONTRACT, THE CONTRACTOR SHALL VERIFY THE HORIZONTAL AND VERTICAL LOCATION OF UNDERGROUND UTILITIES. THE EXISTENCE AND LOCATION OF ANY UNDERGROUND UTILITY PIPES OR STRUCTURES SHOWN ON THESE PLANS WERE OBTAINED BY A SEARCH OF THE AVAILABLE RECORDS, TO THE BEST OF OUR KNOWLEDGE, THERE ARE NO OTHER EXISTING UTILITIES EXCEPT AS SHOWN ON THESE PLANS.
11. THE GENERAL CONTRACTOR IS REQUIRED TO KEEP AND MAINTAIN A SIGNED SET OF THESE PLANS ONSITE AT ALL TIMES FOR USE BY THE ENGINEER OF WORK, SOILS ENGINEER AND THE CITY INSPECTORS. THE GENERAL CONTRACTOR SUPERINTENDENT IS REQUIRED TO UPDATE SAID PLANS WITH AS-BUILT INFORMATION ON A DAILY BASIS AS WORK PROGRESSES. SAID PLANS SHALL BE GIVEN TO THE ENGINEER OF WORK AT THE COMPLETION OF THE PROJECT AND CERTIFIED BY SUPERINTENDENT AS ACCURATE AND COMPLETE.

UTITLITY CONTACTS

THE CONTRACTOR SHALL VERIFY THE EXISTENCE AND LOCATION OF ALL UTILITIES BEFORE COMMENCING WORK. AT LEAST TWO (2) WORKING DAYS PRIOR TO EXCAVATION, NOTICE OF THE PROPOSED WORK SHALL BE GIVEN TO:

UNDERGROUND SERVICE ALERT	1-800-422-4133

PROPOSED WORK SHALL BE COORDINATED WITH THE FOLLOWING UTILITIES:

SAN DIEGO GAS & ELECTRIC MICHELLE KAISER	(619) 480-7651
PACIFIC BELL BOB CORREY	(619) 489-3649

REFERENCE DRAWINGS

IMPROVEMENT PLANS FOR RANCHO CARRILLO OFFSITE SEWER
CITY OF CARLSBAD ENGINEERING DEPARTMENT, DWG NO. 331-1C

SAN MARCOS COUNTY WATER DISTRICT LAND OUTFALL INTERCEPTOR

SAN MARCOS COUNTY WATER DISTRICT FAILSAFE OUTFALL SEWER

SOILS REPORT

THESE PLANS AND SPECIFICATIONS ARE IN ACCORDANCE WITH THE SOILS RECOMMENDATIONS AS IDENTIFIED IN THE SOILS REPORT TITLED: "GEOTECHNICAL INVESTIGATION FOR NORTH LA COSTA PUMP STATION CARLSBAD, CALIFORNIA" AS PREPARED BY GEOCON INCORPORATED DATED APRIL 1993

ABBREVIATIONS

A.B.	ANCHOR BOLT
A.C.	ASPHALTIC CONCRETE
AH	ACCESS HOLE
APPROX.	APPROXIMATE
AVE.	AVENUE
B.W.	BOTTOM OF WALL
C.F.M.	CUBIC FEET PER MINUTE
C.F.S.	CUBIC FEET PER SECOND
CL.	CENTERLINE
CLR.	CLEAR, CLEARANCE
CML&C	CEMENT MOTAR LINED AND COATED
COL.	COLUMN
CONC.	CONCRETE
CONST.	CONSTRUCT
CONT.	CONTINUOUS
C.Y.	CUBIC YARDS
DET.	DETAIL
DIM.	DIMENSION
D.I.P.	DUCTILE IRON PIPE
DOC.NO.	DOCUMENT NUMBER
DWG.	DRAWING
ELEC.	ELECTRICAL
EL., ELEV.	ELEVATION
EQ.	EQUAL
EXIST.	EXISTING
EXP.JT.	EXPANSION JOINT
F.F.	FINISHED FLOOR
F.G.	FINISHED GRADE
FL	FLOWLINE
FLG.	FLANGED
F.M.	FORCE MAIN
FPS	FEET PER SECOND
FRP	FIBERGLASS REINFORCED PLASTIC
FT.	FOOT, FEET
GAL.	GALLONS
GALV.	GALVANIZED
HDR.	HEADER
HDWL.	HEADWALL
HORIZ.	HORIZONTAL
I.E.	INVERT ELEVATION
LB.	POUND
L.F.	LINEAR FEET
MAX.	MAXIMUM
MFG., MANUF.	MANUFACTURER
MIN.	MINIMUM
M.J.	MECHANICAL JOINT
N.T.S.	NOT TO SCALE
NO.	NUMBER
O.C.	ON CENTER
OPNG.	OPENING
P.L.	PROPERTY LINE
P.V.C.	POLYVINYL CHLORIDE
RD.	ROAD
REINF.	REINFORCED
R.O.S.	RECORD OF SURVEY
RPM	REINFORCED PLASTIC MORTAR
S	SLOPE
SDG&E	SAN DIEGO GAS & ELECTRIC
SDRSD	SAN DIEGO REGIONAL STANDARD DRAWING
SEC.	SECTION
SHT.	SHEET
SQ.	SQUARE
SPECS.	SPECIFICATIONS
SS	STAINLESS STEEL
STD.	STANDARD
TDH	TOTAL DYNAMIC HEAD
TELE.	TELEPHONE
T.W.	TOP OF WALL
TYP.	TYPICAL
V	VELOCITY
VAR.	VARIES
VERT.	VERTICAL
W.P.	WEATHER PROOF

DESIGN AND EQUIPMENT DATA

INFLUENT WASTEWATER FLOW

NUMBER OF EDUS	4,962
FLOW PER EDU	220 GPD
AVERAGE DAILY FLOW	1,091,640 GPD (758 GPM)
PEAKING FACTOR	2.24
PEAK FLOW	1,700 GPM

MAIN SEWAGE PUMPS

TYPE	NON-CLOG CENTRIFUGAL WITH CLOSE COUPLED SUBMERSIBLE MOTOR
NUMBER	3
MOTOR SIZE	125 HORSEPOWER
MOTOR RATING	480 VOLT, 3 PHASE
PUMP SPEED	1,800 RPM
PRIMARY RATING POINT	850 GPM AT 249 FT. TDH
SECONDARY RATING POINT	1240 GPM AT 235 FT. TDH

EMERGENCY GENERATOR

TYPE	DIESEL FUELED
SIZE	250 KW
FUEL CONSUMPTION	19 GPH AT FULL LOAD

SUMP PUMPS

TYPE	SUBMERSIBLE NON-CLOG
NUMBER	2
MOTOR SIZE	3/4 HORSEPOWER
MOTOR RATING	480 VOLT, THREE PHASE
PUMP SPEED	1,750 RPM
CAPACITY	40 GPM AT 24 FT.

COMMINUTOR

TYPE	HYDRAULICALLY DRIVEN CHANNEL MONSTER
OPERATING PRESSURE	3,000 PSI MAX.
MOTOR SIZE	5 HORSEPOWER
MOTOR RATING	480 VOLT, 3 PHASE
CAPACITY RATING	1700 GPM WITH 22" HEADLOSS

CHEMICAL METERING PUMPS

TYPE	DIAPHRAGM
NUMBER	2
MOTOR RATING	120 VOLT, SINGLE PHASE
CAPACITY	0 TO 7.2 GPH
PRESSURE RATING	30 PSI

CHEMICAL STORAGE TANK

TYPE	CROSS-LINK POLYETHYLENE
CAPACITY	1,000 GALLONS
APPROX. HEIGHT	5'-9"
APPROX. DIAMETER	5'-4"

SURGE RELIEF VALVE

TYPE	ANGLE
SIZE	4"
MAX. RELIEF PRESSURE	175 PSI
RELIEF SETPOINT	120 PSI
CAPACITY	1000 TO 2250 GPM

PUMP ROOM SUPPLY FAN

TYPE	CENTRIFUGAL INLINE
MOTOR SIZE	1/2 HP
MOTOR RATING	120 VOLT, SINGLE PHASE
CAPACITY	2125 CFM AT 0.125" S.P.

PUMP ROOM EXHAUST FAN

TYPE	CENTRIFUGAL INLINE
MOTOR SIZE	1/2 HP
MOTOR RATING	120 VOLT, SINGLE PHASE
CAPACITY	2725 CFM AT 1.5" S.P.

COMMINUTOR VAULT SUPPLY FAN

TYPE	CENTRIFUGAL INLINE
MOTOR SIZE	1/4 HP
MOTOR RATING	120 VOLT, SINGLE PHASE
CAPACITY	525 CFM AT 0.375" S.P.

WET WELL EXHAUST FAN

TYPE	BACKWARD INCLINED CENTRIFUGAL
MOTOR SIZE	2 HP
MOTOR RATING	240 VOLT, SINGLE PHASE
CAPACITY	600 CFM AT 1.25" S.P.

GENERATOR ROOM EXHAUST FAN

TYPE	WALL MOUNTED
MOTOR SIZE	1/15 HP
MOTOR RATING	120 VOLT, SINGLE PHASE
CAPACITY	475 CFM AT 0.25" S.P.

BATHROOM EXHAUST FAN

TYPE	WALL MOUNTED
MOTOR SIZE	1/200 HP
MOTOR RATING	120 VOLT, SINGLE PHASE
CAPACITY	75 CFM AT 0.125" S.P.

REGISTERED PROFESSIONAL ENGINEER DEXTER S. WILSON No. 19802 EXP. 3/31/98 CIVIL STATE OF CALIFORNIA

PLANS PREPARED BY
WILSON ENGINEERING
CONSULTING ENGINEERS
703 PALOMAR AIRPORT ROAD, SUITE 300
CARLSBAD, CA 92009 (619) 438-4422
DEXTER S. WILSON — DATE 6-16-97

DISTRICT APPROVED CHANGES			
No.	Description	Approved	Date
1	AS- BUILT		

BENCH MARK
Description SEE TITLE SHEET
Location
Record From
Elevation Datum

G-2

CARLSBAD MUNICIPAL WATER DISTRICT
SHEET 2 — ENGINEERING DEPARTMENT — 48 SHEETS

PLANS FOR THE IMPROVEMENT OF:
NOTES, ABBREVIATIONS, DESIGN DATA
POINSETTIA SEWAGE LIFT STATION

District Engineer WILLIAM E. PLUMMER 28176 RCE — Date 6-23-97
REGISTRATION EXPIRES 3-31-98

Drawn PP
Checked AO
CMWD 95-402

331-1E
2 of 48

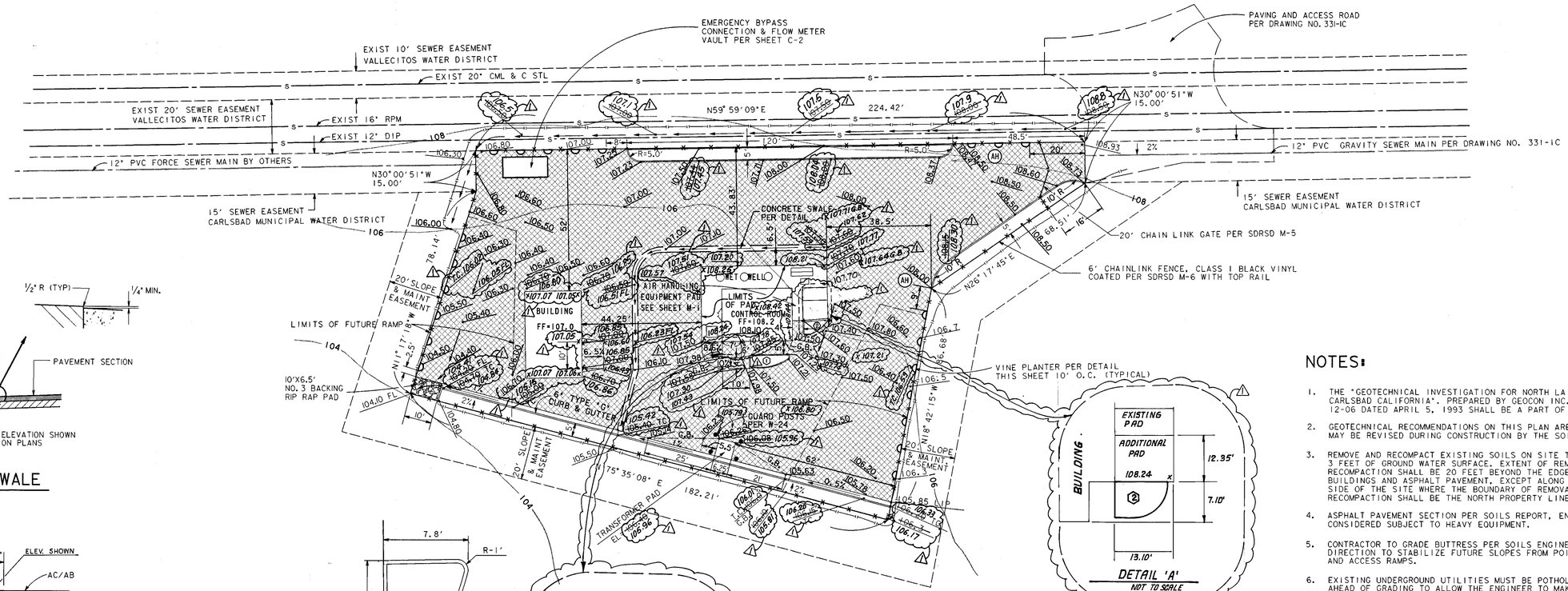

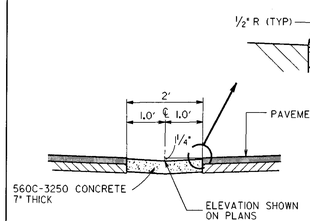

CONCRETE SWALE

NO SCALE

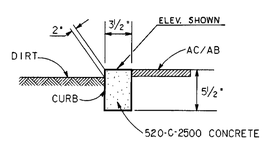

PLANTER CURB DETAIL

NO SCALE

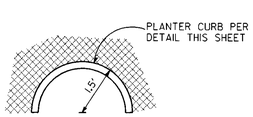

VINE PLANTER

NO SCALE

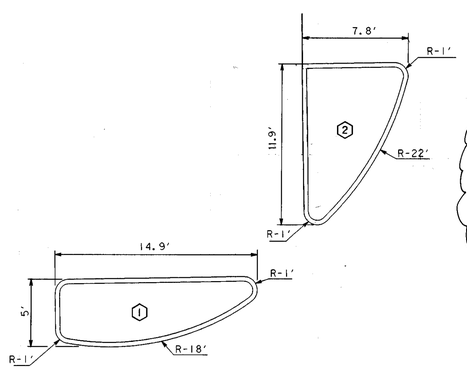

PLANTER DETAILS

NO SCALE

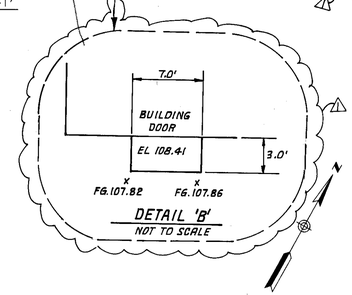

DETAIL 'B'

NOT TO SCALE

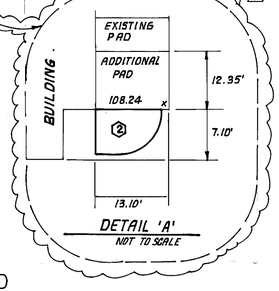

DETAIL 'A'

NOT TO SCALE

20 0 20 40 60

GRAPHIC SCALE 1"= 20'

AS BUILT SPOT ELEVATIONS ARE BASED ON A FIELD SURVEY PERFORMED BY RICK ENGINEERING COMPANY ON APRIL 27, 1999.

NOTES:

1. THE "GEOTECHNICAL INVESTIGATION FOR NORTH LA COSTA PUMP STATION CARLSBAD CALIFORNIA". PREPARED BY GEOCON INC. PROJECT NO. 04787-12-06 DATED APRIL 5, 1993 SHALL BE A PART OF THIS PLAN.
2. GEOTECHNICAL RECOMMENDATIONS ON THIS PLAN ARE PRELIMINARY AND MAY BE REVISED DURING CONSTRUCTION BY THE SOILS ENGINEER.
3. REMOVE AND RECOMPACT EXISTING SOILS ON SITE TO WITHIN 3 FEET OF GROUND WATER SURFACE. EXTENT OF REMOVAL AND RECOMPACTION SHALL BE 20 FEET BEYOND THE EDGE OF PROPOSED BUILDINGS AND ASPHALT PAVEMENT. EXCEPT ALONG THE NORTH SIDE OF THE SITE WHERE THE BOUNDARY OF REMOVAL AND RECOMPACTION SHALL BE THE NORTH PROPERTY LINE OF THE SITE.
4. ASPHALT PAVEMENT SECTION PER SOILS REPORT, ENTIRE PAD TO BE CONSIDERED SUBJECT TO HEAVY EQUIPMENT.
5. CONTRACTOR TO GRADE BUTTRESS PER SOILS ENGINEER'S DIRECTION TO STABILIZE FUTURE SLOPES FROM POINSETTIA LANE AND ACCESS RAMPS.
6. EXISTING UNDERGROUND UTILITIES MUST BE POTHOLED SUFFICIENTLY AHEAD OF GRADING TO ALLOW THE ENGINEER TO MAKE ANY ADJUSTMENTS REQUIRED.

*SEE TRANSMITTAL LETTER DATED 6-21-99 TO CMWD ATTENTION RANDY KLARHSEN FOR MY SCOPE OF WORK AND MY RESPONSIBILITY RELATIVE TO THESE "AS BUILT" PLANS.

IN NO EVENT IS IT EXPRESSED OR IMPLIED TO YOU OR OTHERS THAT BY SIGNING THE "AS BUILT" STAMP THAT I OR RICK ENGINEERING COMPANY HAVE DONE INSPECTION OR MATERIAL TESTING AT ANY TIME TO INSURE CONFORMANCE OF THE COMPLETED PROJECT TO THE PLANS AND SPECIFICATIONS.

LEGEND

BLADED SWALE	→
TYPE "G" CURB AND GUTTER (PER SDRSD G-2)	═══
SPOT ELEVATION	107.44
CONCRETE SWALE	═══
GUARD POST PER CMWD W-24	•
ACCESSHOLE PER SHEET C-2	AH
PLANTER DETAIL	①
CHAINLINK FENCE	× × ×
ASPHALT PAVING	▒
AS BUILT FIELD SURVEY SPOT ELEVATION	107.77

"AS-BUILT"
* SEE NOTE

NORMAN C. ARNDT R.C.E. 21693 EXP. 9/30/01 — DATE 6-21-99

REVIEWED BY:
INSPECTOR — DATE 6-25-99

C-1

CARLSBAD MUNICIPAL WATER DISTRICT

SHEET 3 — ENGINEERING DEPARTMENT — 48 SHEETS

PLANS FOR THE IMPROVEMENT OF:

PAVING AND DRAINAGE POINSETTIA SEWAGE LIFT STATION

William E. Plummer 28176 — District Engineer: WILLIAM E. PLUMMER RCE — REGISTRATION EXPIRES 3-31-98 — Date 6-23-97

Drawn
Checked — CMWD — 95-402

RICK ENGINEERING COMPANY
5620 Friars Road
San Diego,
California 92110-2596
(619) 291-0707

REGISTERED PROFESSIONAL ENGINEER NORMAN C. ARNDT No. 21693 Exp. 9/30/97 CIVIL STATE OF CALIFORNIA

ENGINEER OF WORK
RICK ENGINEERING CO.
NORMAN C. ARNDT R.C.E. 21693 EXP. 9/30/97 — DATE 6-16-97

DISTRICT APPROVED CHANGES

No.	Description	Approved	Date
1	AS BUILTS		5-12-99

BENCH MARK
Description: STREET CENTERLINE MONUMENT
Location: STATION 249+07.56 P.O.C. ON EL CAMINO REAL
Record From: COUNTY OF SAN DIEGO R1800 (249+07.56)
Elevation: 307.874 Datum: M.S.L.

AS BUILT

J:\psisc2.dgn 16-JUN-1997 PD411 13:26

331-1E
062000
3 of 48

11994#SLSC2

COORDINATE DATA			
POINT	NORTHING	EASTING	DESCRIPTION
1	346703.24407	691520.97801	15" SEWER AT INSIDE WALL OF VAULT
2	346718.17644	691546.82686	CENTER SEWER ACCESS HOLE NO. 1
3	346774.19505	691553.33190	CENTER SEWER ACCESS HOLE NO. 2
4	346790.69919	691581.90158	CONNECT TO 12" GRAVITY SEWER
5	346678.44109	691387.58128	CONNECT TO 12" FORCE MAIN
6	346700.79812	691426.28268	12" FORCE MAIN, CENTER 45° ANGLE
7	346672.47885	691473.88553	12" FORCE MAIN, CENTER 45° ANGLE
8	346678.48142	691484.27635	12" FORCE MAIN AT INSIDE WALL OF PUMP ROOM
9	346643.78847	691448.21056	16" AIR, CENTER 90° ELBOW
10	346670.71278	691482.98981	16" AIR, CENTER 90° ELBOWS
11	346673.21385	691487.31932	16" AIR AT INSIDE WALL OF PUMP ROOM
12	346654.30750	691443.09631	8" AIR, CENTER 90° ELBOW
13	346672.90127	691464.28787	8" AIR, CENTER 11.25° ANGLE
14	346682.95524	691481.69191	8" AIR AT INSIDE WALL OF WET WELL
15	346687.92327	691518.27988	8" AIR, CENTER 90° ELBOW
16	346697.48608	691520.83969	8" AIR, CENTER 45° ANGLE
17	346700.94969	691518.83884	8" AIR AT INSIDE WALL OF COMMINUTOR VAULT
18	346698.21232	691435.94258	12" FORCE MAIN, CENTER 22.5° ELBOW
19	346674.28374	691467.14289	12" FORCE MAIN, CENTER 22.5° ELBOW

ALIGNMENT DATA			
NO.	BEARING	LENGTH	REMARKS
1	N59°59'09"E	29.85'	15" PVC GRAVITY SEWER
2	N06°37'25"E	56.40'	12" PVC GRAVITY SEWER
3	N59°59'09"E	32.99'	12" PVC GRAVITY SEWER
4	N89°59'09"E	3.00'	15" PVC GRAVITY SEWER
5	N59°59'09"E	44.69'	12" D.I.P. FORCE MAIN
6	N75°00'51"W	6.98'	12" D.I.P. FORCE MAIN
7	N59°59'09"E	12.00'	12" D.I.P. FORCE MAIN
8	N51°41'28"E	41.01'	16" PUMP ROOM EXHAUST AIR
9	N59°59'09"E	8.00'	16" PUMP ROOM EXHAUST AIR
10	N48°44'09"E	28.19'	8" WET WELL EXHAUST AIR
11	N59°59'09"E	20.10'	8" WET WELL EXHAUST AIR
12	N14°59'09"E	9.90'	8" COMMINUTOR VAULT SUPPLY AIR
13	N30°00'51"W	4.00'	8" COMMINUTOR VAULT SUPPLY AIR
14	N52°30'51"W	39.32'	12" D.I.P. FORCE MAIN
15	N75°00'51"W	10.00'	12" D.I.P. FORCE MAIN

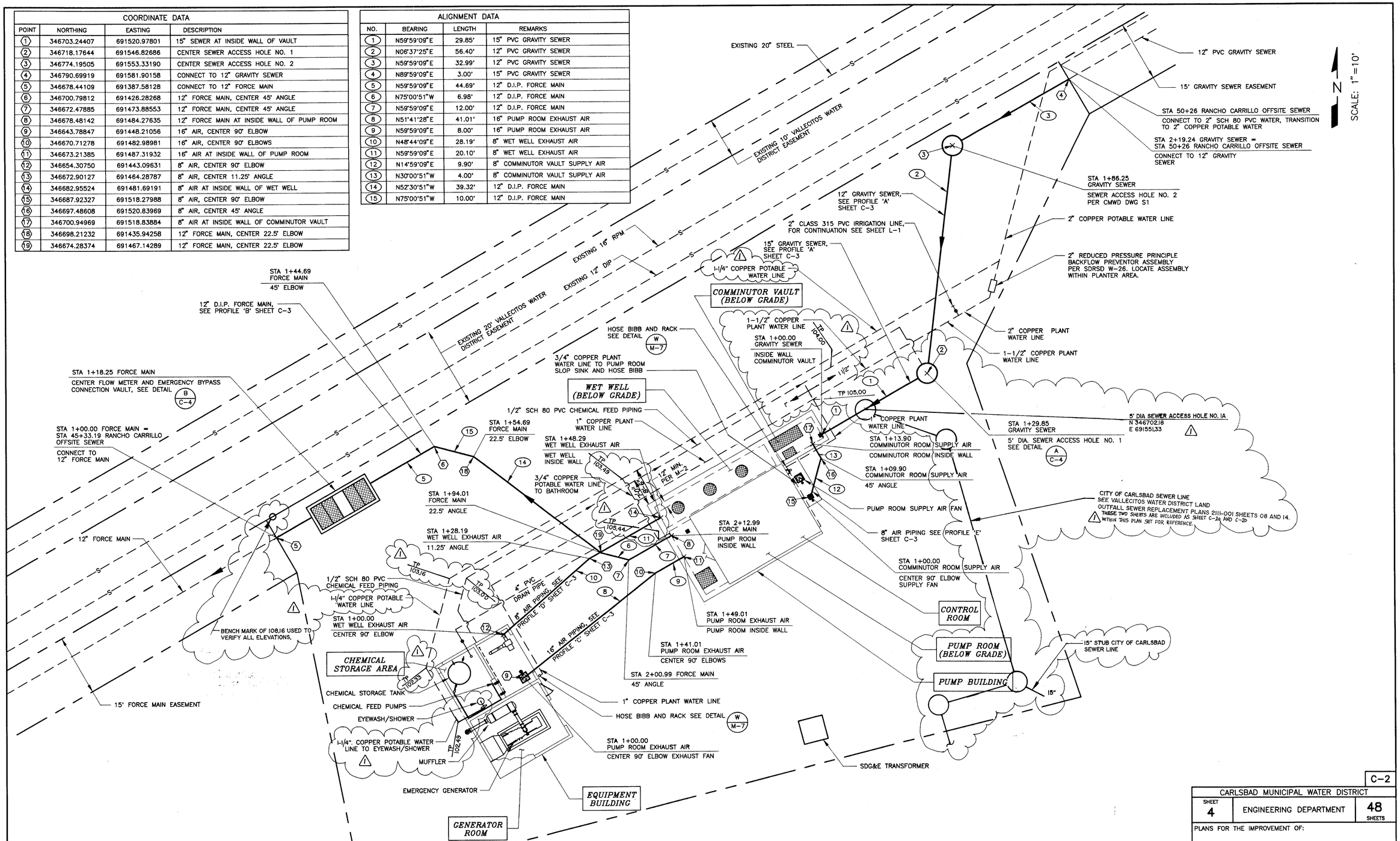

C-2

CARLSBAD MUNICIPAL WATER DISTRICT		
SHEET 4	ENGINEERING DEPARTMENT	48 SHEETS

PLANS FOR THE IMPROVEMENT OF:

SITE PIPING PLAN

POINSETTIA SEWAGE LIFT STATION

District Engineer WILLIAM E. PLUMMER RCE 28176 — Date 6-23-97
REGISTRATION EXPIRES 3-31-98

Drawn PP
Checked AO

CMWD 95-402

REGISTERED PROFESSIONAL ENGINEER — DEXTER S. WILSON — C 30198 — EXP. 6/30/98 — CIVIL — STATE OF CALIFORNIA

PLANS PREPARED BY
WILSON ENGINEERING
CONSULTING ENGINEERS
703 PALOMAR AIRPORT ROAD, SUITE 300
CARLSBAD, CA 92009 (619) 438-4422

DEXTER S. WILSON — DATE 6-16-97

DISTRICT APPROVED CHANGES			
No.	Description	Approved	Date
1	AS-BUILT		

BENCH MARK
Description SEE TITLE SHEET
Location
Record From
Elevation Datum

331-1E
4 of 48
0420000

PD 411

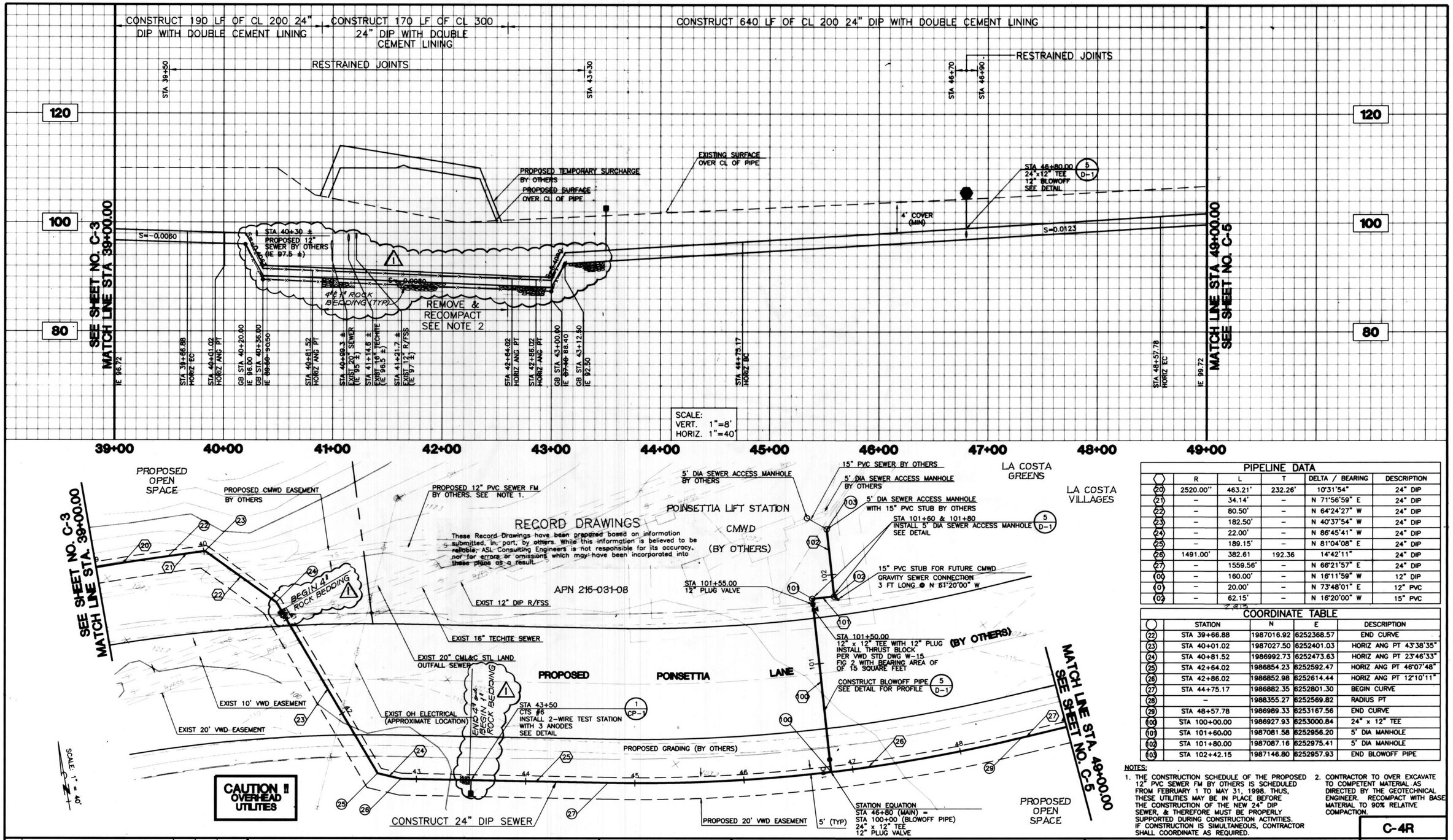

PIPELINE DATA

	R	L	T	DELTA / BEARING	DESCRIPTION
20	2520.00"	463.21'	232.26'	10°31'54"	24" DIP
21	–	34.14'	–	N 71°56'59" E	24" DIP
22	–	80.50'	–	N 64°24'27" W	24" DIP
23	–	182.50'	–	N 40°37'54" W	24" DIP
24	–	22.00'	–	N 86°45'41" W	24" DIP
25	–	189.15'	–	N 81°04'08" E	24" DIP
26	1491.00'	382.61	192.36	14°42'11"	24" DIP
27	–	1559.56'	–	N 66°21'57" E	24" DIP
00	–	160.00'	–	N 16°11'59" W	12" DIP
01	–	20.00'	–	N 73°48'01" E	12" PVC
02	–	62.15'	–	N 16°20'00" W	15" PVC

COORDINATE TABLE

	STATION	N	E	DESCRIPTION
22	STA 39+66.88	1987016.92	6252368.57	END CURVE
23	STA 40+01.02	1987027.50	6252401.03	HORIZ ANG PT 43°38'35"
24	STA 40+81.52	1986992.73	6252473.63	HORIZ ANG PT 23°46'33"
25	STA 42+64.02	1986854.23	6252592.47	HORIZ ANG PT 46°07'48"
26	STA 42+86.02	1986852.98	6252614.44	HORIZ ANG PT 12°10'11"
27	STA 44+75.17	1986882.35	6252801.30	BEGIN CURVE
28	–	1988355.27	6252569.82	RADIUS PT
29	STA 48+57.78	1986989.33	6253167.56	END CURVE
100	STA 100+00.00	1986927.93	6253000.84	24" x 12" TEE
101	STA 101+60.00	1987081.58	6252956.20	5' DIA MANHOLE
102	STA 101+80.00	1987087.16	6252975.41	5' DIA MANHOLE
103	STA 102+42.15	1987146.80	6252957.93	END BLOWOFF PIPE

NOTES:

1. THE CONSTRUCTION SCHEDULE OF THE PROPOSED 12" PVC SEWER FM BY OTHERS IS SCHEDULED FROM FEBRUARY 1 TO MAY 31, 1998. THUS, THESE UTILITIES MAY BE IN PLACE BEFORE THE CONSTRUCTION OF THE NEW 24" DIP SEWER, & THEREFORE MUST BE PROPERLY SUPPORTED DURING CONSTRUCTION ACTIVITIES. IF CONSTRUCTION IS SIMULTANEOUS, CONTRACTOR SHALL COORDINATE AS REQUIRED.
2. CONTRACTOR TO OVER EXCAVATE TO COMPETENT MATERIAL AS DIRECTED BY THE GEOTECHNICAL ENGINEER. RECOMPACT WITH BASE MATERIAL TO 90% RELATIVE COMPACTION.

NO	DESCRIPTION	BY	DATE	APPROVED
1	"RECORD DRAWINGS"		11/98	

REVISIONS

ASL Consulting Engineers
11770 BERNARDO PLAZA CT., SUITE 116
SAN DIEGO, CA 92128
(619) 673-5505 FAX (619) 673-1610

DESIGNED BY RSA | CHECKED BY PHL | PLOT DATE 4/02/98 | FILE NAME SSPP04.DWG
DRAWN BY KAB | DATE

REGISTERED PROFESSIONAL ENGINEER PRESTON H. LEWIS C045927 12-31-98 CIVIL STATE OF CALIFORNIA

VALLECITOS WATER DISTRICT
PRESTON H. LEWIS
RCE NO. 45927
11-4-98
DATE

VALLECITOS WATER DISTRICT
RECOMMENDED BY
DENNIS O. LAMB
DIRECTOR OF ENGINEERING & OPERATIONS
DATE

VALLECITOS WATER DISTRICT

LAND OUTFALL SEWER REPLACEMENT
(ORIGINAL STA 187+00 TO 268+00)
PLAN & PROFILE

C-4R
ASL PROJECT NO. 2020.010.02
SHEET NO. 8 OF 18
VWD DWG. NO. 2111-001-08

PD 411
VWD LN 98-33
CMWD 95-402 Sht. C-2a
(FOR REFERENCE ONLY)

112101
331-1E
4A of 48

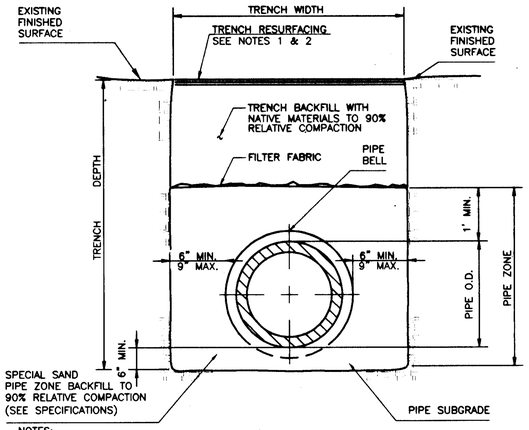

NOTES:
1. FOR PAVED AREAS, REPLACE STRUCTURAL SECTION PER JURISDICTIONAL AGENCY PERMIT REQUIREMENTS.
2. FOR UNPAVED AREAS FROM STA 29+00 TO 89+00, BACKFILL TO ORIGINAL GRADE & PLACE 10' WIDE DISINTEGRATED GRANITE ROAD PER DETAIL. (6/–)
3. FOR UNPAVED AREAS FROM STA 10+00 TO 29+00 & 89+00 TO 91+30, RESTORE SURFACE IN KIND.

TYPICAL TRENCH SECTION (1/–)
N.T.S.

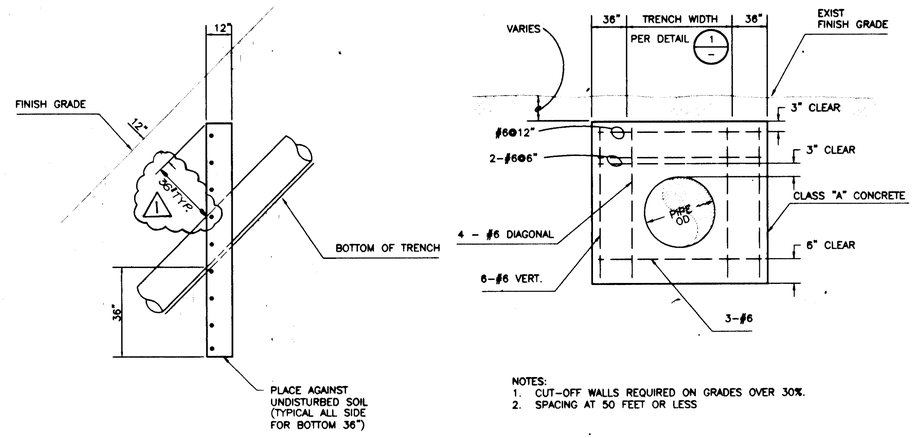

NOTES:
1. CUT-OFF WALLS REQUIRED ON GRADES OVER 30%.
2. SPACING AT 50 FEET OR LESS

CONCRETE SLOPE ANCHOR (2/–)
N.T.S.

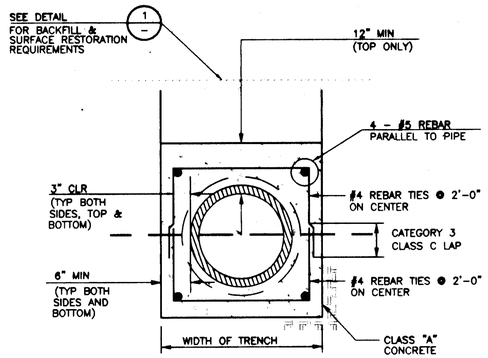

CONCRETE ENCASEMENT DETAIL (3/–)
N.T.S.

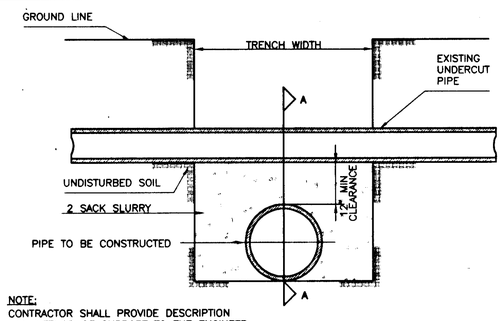

NOTE:
CONTRACTOR SHALL PROVIDE DESCRIPTION AND METHOD OF SUPPORT TO THE ENGINEER PRIOR TO EXCAVATION AND INSTALLATION OF PIPE.

TYPICAL SECTION

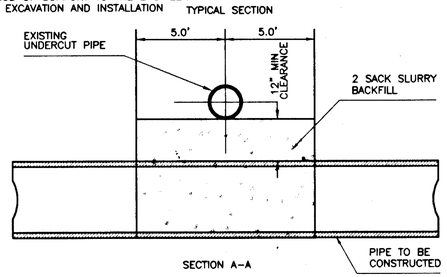

SECTION A-A

PIPE SUPPORT DETAIL (4/–)
N.T.S.

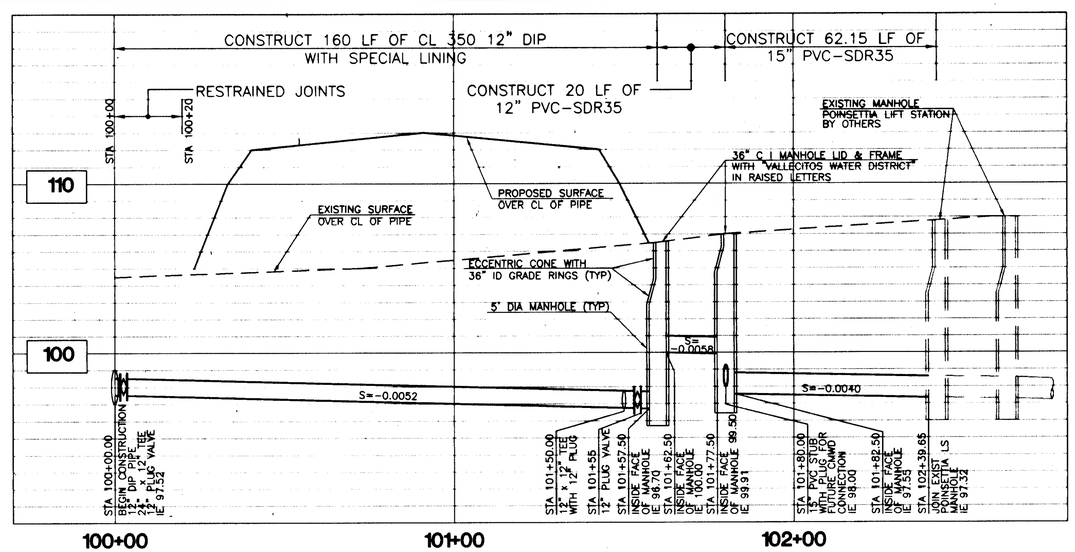

NOTES:
1. ALL 12" DIP WITH SPECIAL LINING SHALL BE BONDED PER (6/CP-2)
2. PLUG VALVES SHALL BE BONDED PER (4/CP-3)

12" BLOWOFF PROFILE DETAIL (5/–)
HORIZ: 1" = 20'
VERT: 1" = 4'

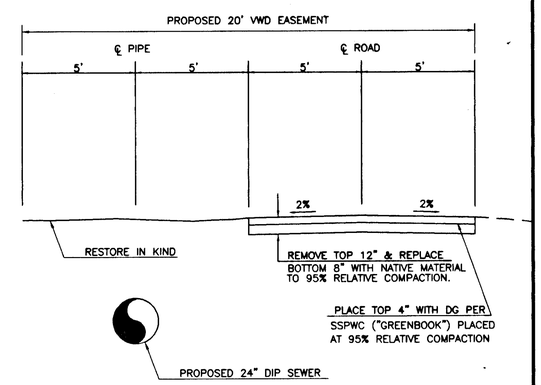

NOTES:
1. DG ROAD IS LIMITED TO UNPAVED AREAS BETWEEN STA 29+00 & 89+00.

10' WIDE BY 4" DEEP DG ROAD DETAIL (6/–)
N.T.S.

RECORD DRAWINGS

These Record Drawings have been prepared based on information submitted, in, part, by others. While this information is believed to be reliable, ASL Consulting Engineers is not responsible for its accuracy, nor for errors or omissions which may have been incorporated into these plans as a result.

NO.	DESCRIPTION	BY	DATE	APPROVED
1	"RECORD DRAWINGS"		11/98	

REVISIONS

ASL Consulting Engineers
11770 BERNARDO PLAZA CT., SUITE 116
SAN DIEGO, CA 92128
(619) 673-5505 FAX (619) 673-1610

DESIGNED BY	RSA	CHECKED BY	PHL	PLOT DATE	FILE NAME
DRAWN BY	KAB	DATE		4/14/98	SSDT01.DWG

REGISTERED PROFESSIONAL ENGINEER PRESTON H. LEWIS No. 45927 Exp. 12-31-98 CIVIL STATE OF CALIFORNIA

VALLECITOS WATER DISTRICT
PRESTON H. LEWIS 11-4-98
RCE NO. 45927 DATE

VALLECITOS WATER DISTRICT
RECOMMENDED BY
DENNIS O. LAMB DATE
DIRECTOR OF ENGINEERING & OPERATIONS

VALLECITOS WATER DISTRICT

LAND OUTFALL SEWER REPLACEMENT (ORIGINAL STA 187+00 TO 268+00)

DETAILS

D-1R

ASL PROJECT NO. 2020.010.02

SHEET NO. 14 OF 18 (46 of 48)

VWD DWG. NO. 2111-001-14

PD 411

VWD LN 98-33

CMWD 95-402 Sht. C-2b
(FOR REFERENCE ONLY)

331-1 E 002000
46 of 48

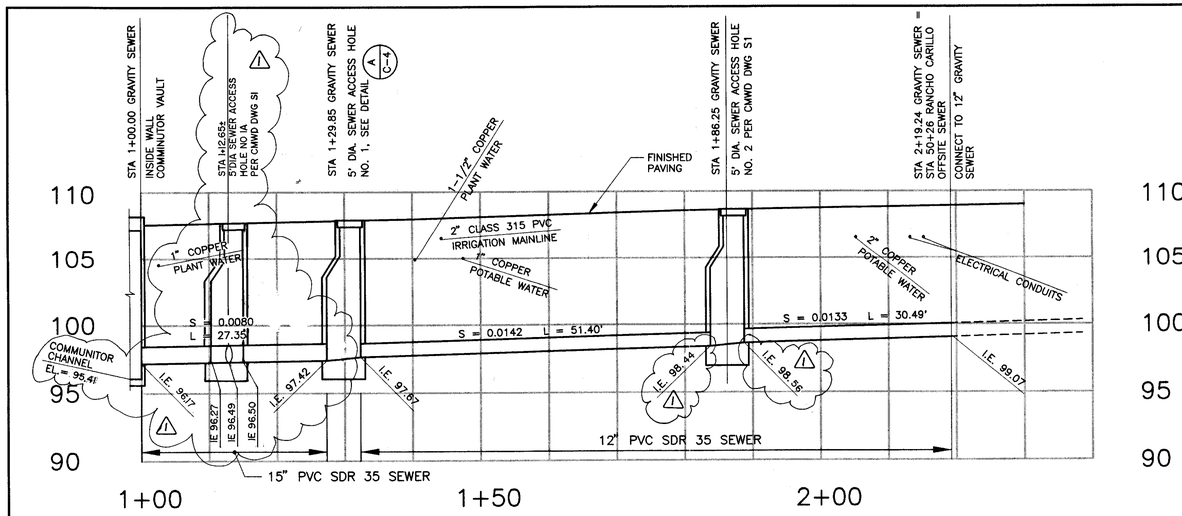

PROFILE 'A' 12" AND 15" GRAVITY SEWER

SCALE HORZ. : 1"=10'
VERT. : 1"=5'

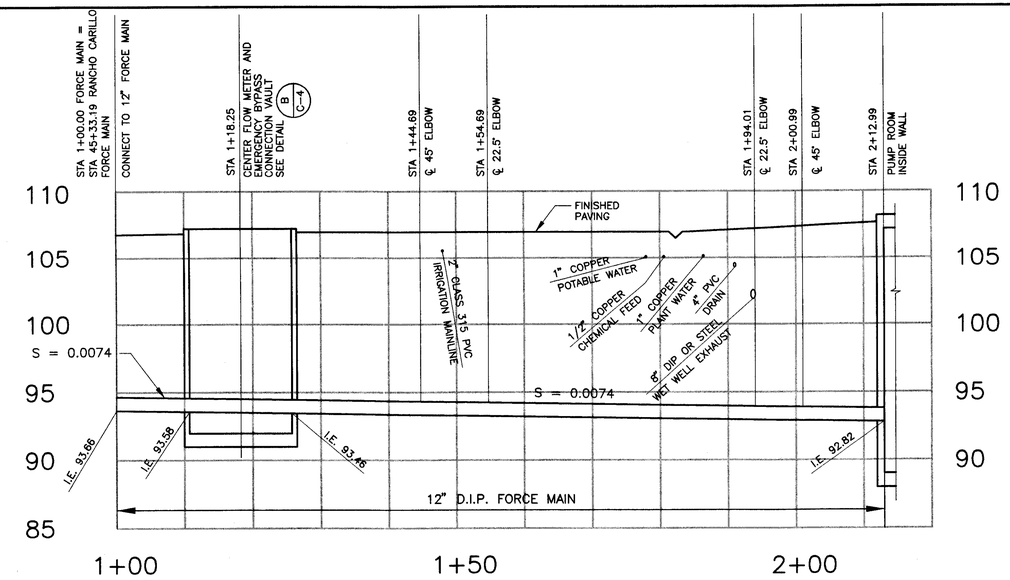

PROFILE 'B' 12" FORCE MAIN

SCALE HORZ. : 1"=10'
VERT. : 1"=5'

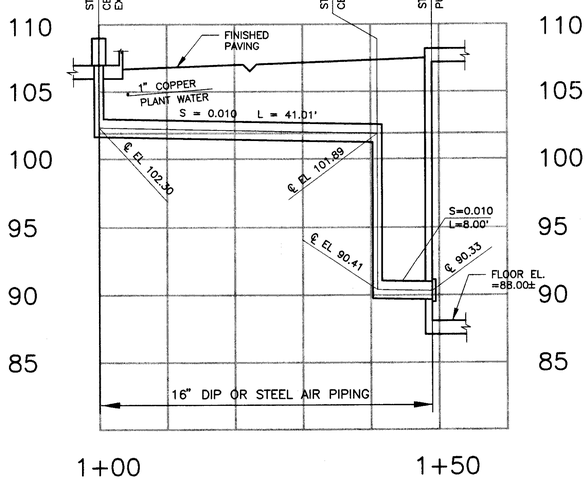

PROFILE 'C' 16" PUMP ROOM EXHAUST AIR

SCALE HORZ. : 1"=10'
VERT. : 1"=5'

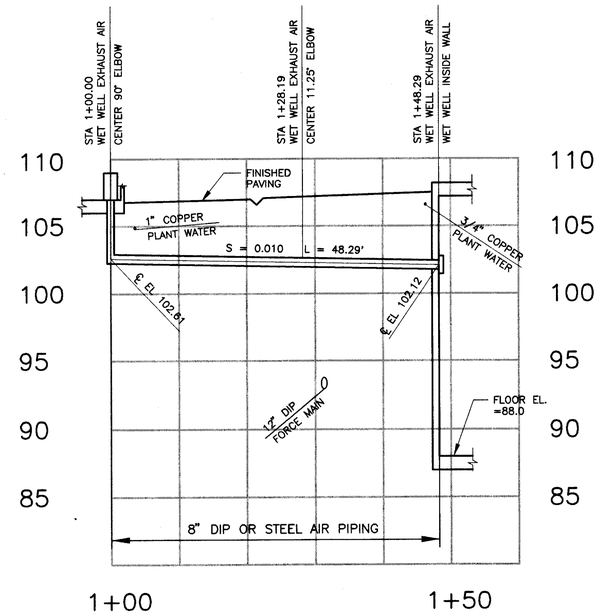

PROFILE 'D' 8" WET WELL EXHAUST AIR

SCALE HORZ. : 1"=10'
VERT. : 1"=5'

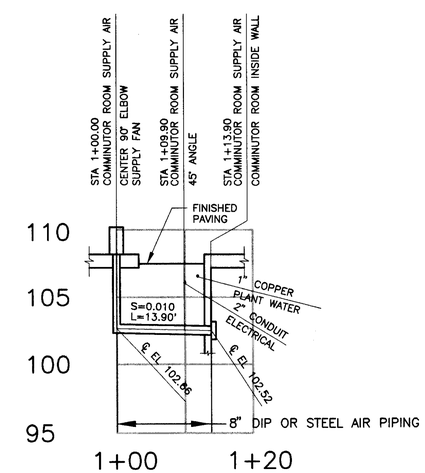

PROFILE 'E' 8" COMMINUTOR ROOM SUPPLY AIR

SCALE HORZ. : 1"=10'
VERT. : 1"=5'

C-3

CARLSBAD MUNICIPAL WATER DISTRICT

SHEET 5	ENGINEERING DEPARTMENT	48 SHEETS

PLANS FOR THE IMPROVEMENT OF:

PIPING PROFILES

POINSETTIA SEWAGE LIFT STATION

District Engineer WILLIAM E. PLUMMER 28176 RCE — Date 6-23-97
REGISTRATION EXPIRES 3-31-98

Drawn PP
Checked AO

CMWD 95-402

REGISTERED PROFESSIONAL ENGINEER DEXTER S. WILSON No. 28692 6/30/98 CIVIL STATE OF CALIFORNIA

PLANS PREPARED BY
WILSON ENGINEERING
CONSULTING ENGINEERS
703 PALOMAR AIRPORT ROAD, SUITE 300
CARLSBAD, CA 92009 (619) 438-4422

DEXTER S. WILSON — DATE 6-16-97

DISTRICT APPROVED CHANGES

No.	Description	Approved	Date
1	AS-BUILT		

BENCH MARK

Description SEE TITLE SHEET
Location
Record From
Elevation Datum

331-1E 092000

5 of 48

PD 411

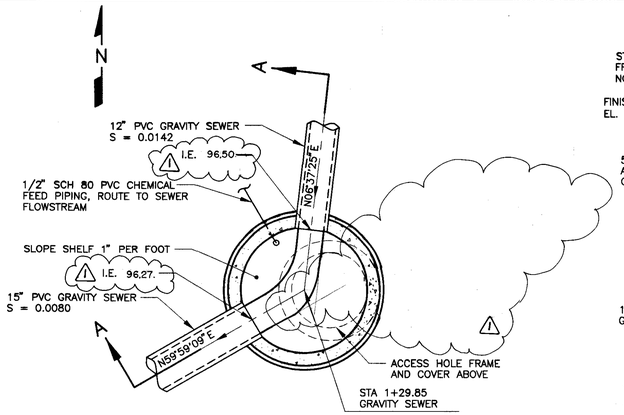

PLAN VIEW

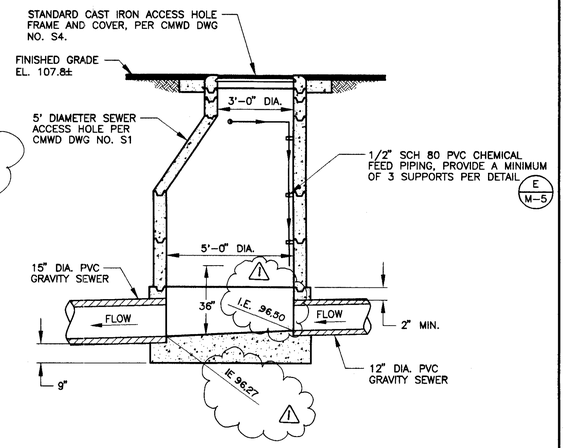

SECTION A-A

NOTES:

1. PROVIDE BELL AND SPIGOT JOINT ON EACH PIPE WITHIN 3 FEET OF ACCESS HOLE.
2. TOP OF SHELF INSIDE ACCESS HOLE SHALL BE BUILT UP TO MATCH TOP OF GRAVITY SEWER ELEVATION.
3. PROVIDE WATER STOP ON PVC PIPE PENETRATIONS INTO ACCESS HOLE.

SEWER ACCESS HOLE NO. DETAIL A VAR

SCALE: 3/8"=1'-0"

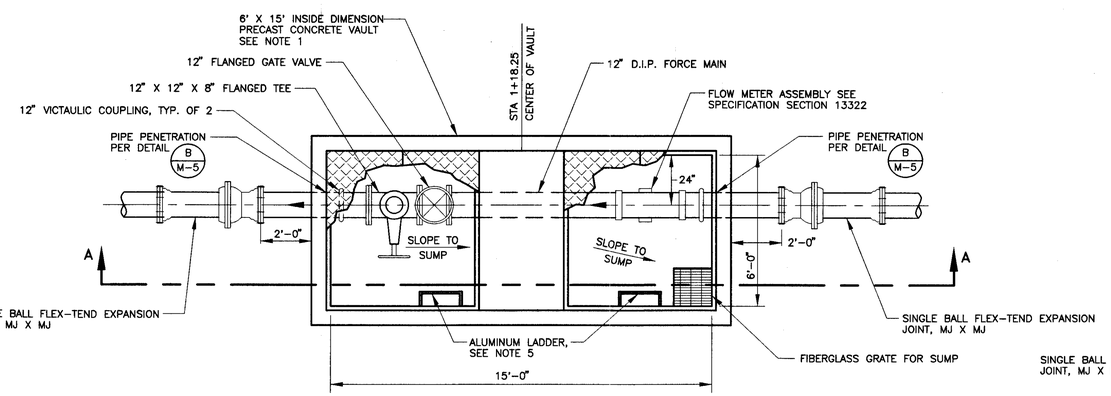

PLAN VIEW

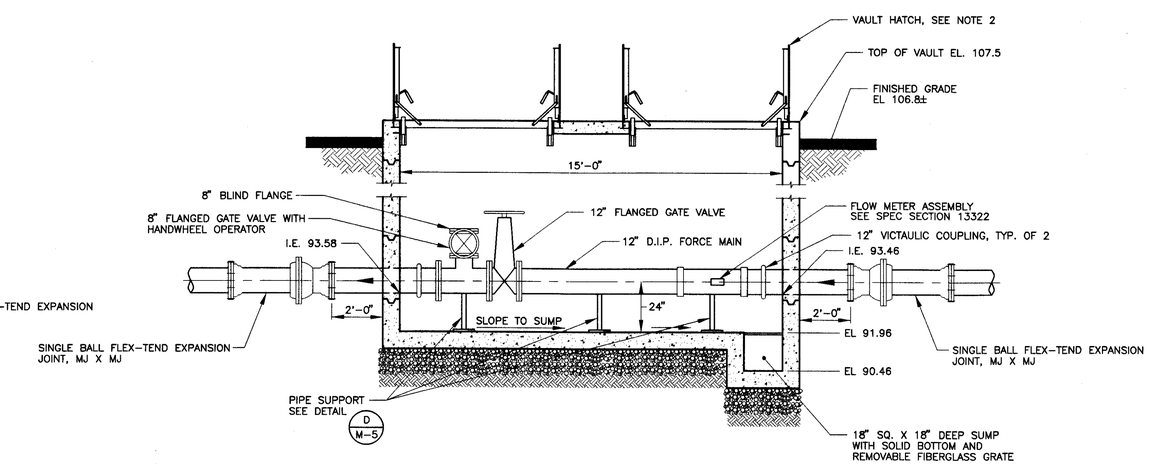

SECTION A-A

NOTES:

1. PRECAST CONCRETE VAULT, 6' X 15', QUIKSET OR EQUAL, DESIGNED FOR H20 TRAFFIC LOADING AND EARTH LOADING AND HYDROSTATIC FORCES RESULTING FROM GROUNDWATER LEVEL AT FINISHED GRADE. EXTERIOR OF VAULT SHALL BE WATERPROOFED, SEAL JOINTS WITH WATERPROOF MASTIC. INTERIOR WALLS SHALL BE PAINTED WHITE.
2. PROVIDE TWO ALUMINUM CHECKER PLATE HATCHES, 2 PIECE FULL 6' X 6' OPENING, RATED FOR 150 LBS/SQ. FT., SPRING ASSISTED, HINGED COVER, LOCKING HASP. BILCO TYPE JD, NYSTROM TYPE FGA, OR EQUAL. ROUTE CHANNEL FRAME DRAINS TO SUMP.
3. CONTRACTOR SHALL SUBMIT SHOP DRAWINGS ON THE PRECAST VAULT AND CHECKER PLATE HATCHES FOR APPROVAL PRIOR TO FABRICATION.
4. PLACE VAULT ON 12" OF 3/4" CRUSHED ROCK.
5. PROVIDE ALUMINUM LADDERS AT THE LOCATIONS SHOWN, BOLTED TO VAULT WALL WITH 316 STAINLESS STEEL ANCHOR BOLTS. PROVIDE LADDERS WITH LADDER-UP SAFETY POST AS MANUFACTURED BY BILCO, OR EQUAL.
6. ALL ELECTRICAL AND PIPING CONNECTIONS AND PENETRATIONS SHALL BE WATER TIGHT.
7. SLOPE VAULT FLOOR TO SUMP AT 2 PERCENT MINIMUM.

METER AND EMERGENCY BYPASS CONNECTION VAULT B C-2

SCALE: 3/8" = 1'-0"

REGISTERED PROFESSIONAL ENGINEER DEXTER S. WILSON No. 13392 CIVIL 6/30/98 STATE OF CALIFORNIA

PLANS PREPARED BY
WILSON ENGINEERING
CONSULTING ENGINEERS
703 PALOMAR AIRPORT ROAD, SUITE 300
CARLSBAD, CA 92009 (619) 438-4422

DEXTER S. WILSON 6-16-97 DATE

DISTRICT APPROVED CHANGES			
No.	Description	Approved	Date
1	AS-BUILT		

BENCH MARK
Description SEE TITLE SHEET
Location
Record From
Elevation Datum

C-4

CARLSBAD MUNICIPAL WATER DISTRICT

SHEET 6	ENGINEERING DEPARTMENT	48 SHEETS

PLANS FOR THE IMPROVEMENT OF:

PIPING DETAILS

POINSETTIA SEWAGE LIFT STATION

William E. Plummer 28176 RCE 6-23-97
District Engineer WILLIAM E. PLUMMER REGISTRATION EXPIRES 3-31-98 Date

Drawn PP
Checked AO
CMWD 95-402

PD 411

331-1E
6 of 48
002000

DATE:	8/28/96				PREPARED BY:
JOB NUMBER:	96-020				MARVIN H. TANIGUCHI
JOB TITLE:	POINSETTIA SEWAGE LIFT STATION				
HYDRAULIC CALCULATION				HGL OR PRESSURE:	80
METER NO.	1	SYSTEM:	A8	GPM:	11.6

STANDARD SYSTEM LOSSES		SIZE	PSI LOSS
	WATER METER:	2"	-
	BACKFLOW PREVENTER:	2"	8.90
	REMOTE CONTROL VALVE:	1"	1.75
	IRRIGATION SPRINKLER HEAD (OPERATING PRESSURE):		15.00
	PRESSURE REGULATOR:	2"	3.00
	CHECK VALVE(SPRINKLER HEAD):		3.00
	BALL VALVE:	2"	1.00
	PIPE FITTING (ALLOWANCE):		5.00
HYDRAULIC GRADE CHANGE			
	HGL OF STREET MAIN ELEVATION:	108	-
	ELEV. OF IRRIG. HEAD @ HIGHEST POINT:	106	
	ELEVATION DIFFERENCE:	-2	ELEV. DIFF. X.433 -0.87

CLASS 200 PVC PIPE NON-PRESSURE				
PIPE SIZE	LENGTH	GPM	PSI LOSS	
3/4"	90'	6.2	2.00	
1"	5'	11.6	0.09	
1-1/4"				
1-1/2"				
2"				
2-1/2"				
		SUB TOTAL	2.09	2.09

CLASS 315 PVC PIPE - PRESSURE MAINLINE				
PIPE SIZE	LENGTH	GPM	PSI LOSS	
1-1/4"				
1-1/2"				
2"	4170'	11.6	11.70	
2-1/2"				
3"				
4"				
		SUB TOTAL	11.70	11.70
			TOTAL PRESSURE LOSS:	50.57
			AVAILABLE PRESSURE (PSI):	80.00
			AVAILABLE RESIDUAL PRESSURE:	29.43
				PRESSURE ADEQUATE

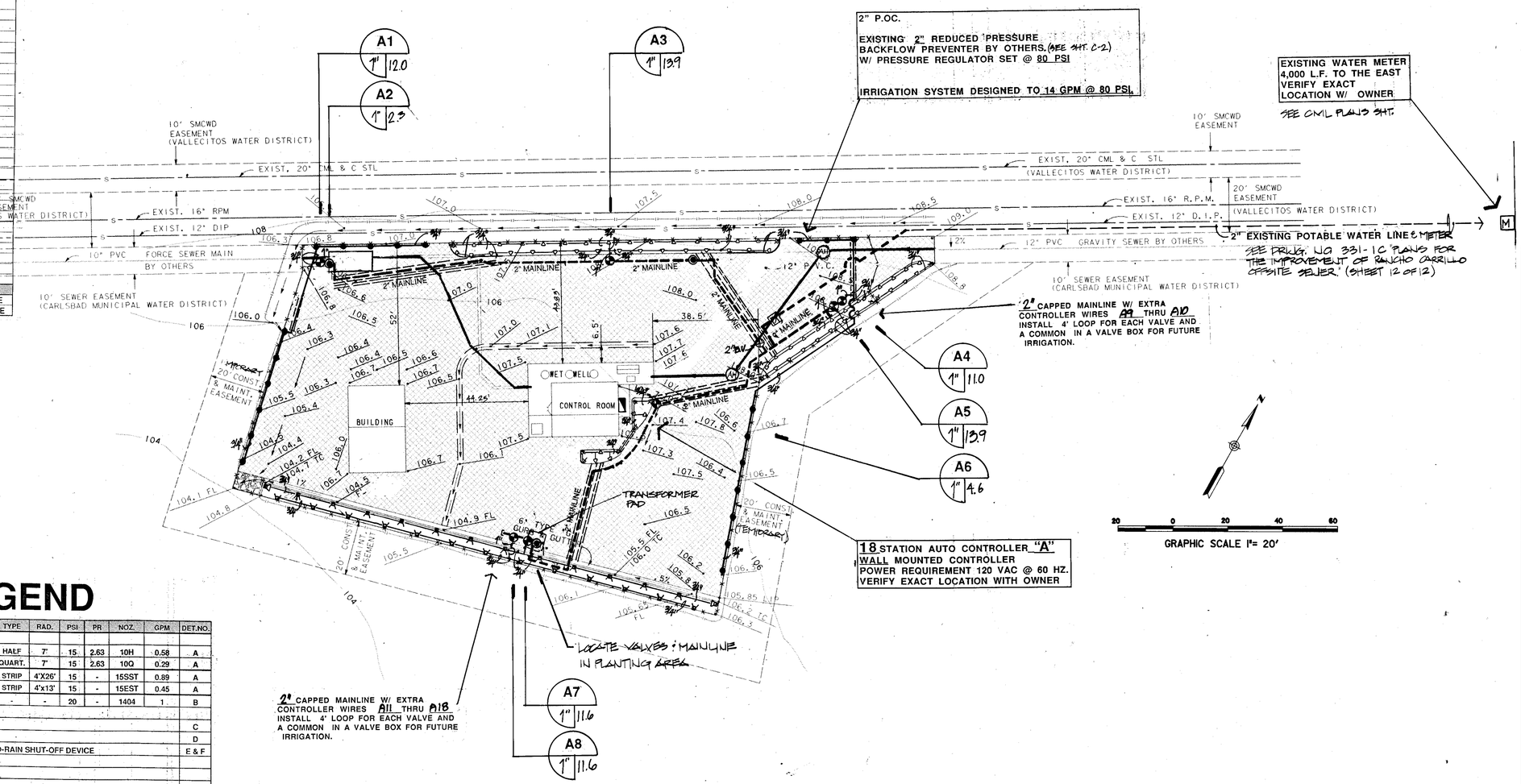

IRRIGATION LEGEND

SYMBOL	DESCRIPTION/MANUFACTURER/MODEL #	TYPE	RAD.	PSI	PR	NOZ.	GPM	DET.NO.
	RAINBIRD 1806 SAM- PRS - SHRUB SPRAY	HALF	7'	15	2.63	10H	0.58	A
	RAINBIRD 1806 SAM- PRS - SHRUB SPRAY	QUART.	7'	15	2.63	10Q	0.29	A
	RAINBIRD 1806 SAM - SIDE STRIP	STRIP	4'X26'	15	-	15SST	0.89	A
	RAINBIRD 1806 SAM - END STRIP	STRIP	4'x13'	15	-	15EST	0.45	A
	RAINBIRD PRESSURE COMPENSATING BELOW GRADE BUBBLER	-	-	20	-	1404	1	B
	RAINBIRD 33LRC QUICK COUPLER VALVE W /33K KEY AND HOSE SWIVEL							C
	RAINBIRD " PEB" AUTO-CONTROL VALVE - SEE PLAN FOR SIZE							D
	IRRI-TROL MC PLUS CONTROLLER/WALL MOUNTED W/" RAINGUARD" AUTO-RAIN SHUT-OFF DEVICE							E & F
	MODEL # "RGVR"							
	BALL VALVE "KING BROS." LO TORQ. MODEL							G
BF	EXISTING BACKFLOW PREVENTER BY OTHERS							
M	WATER METER BY OTHERS							
	CLASS 200 PVC LATERAL NON - PRESSURE (MIN. COVERAGE 12" COVER)							
	SCHEDULE 40 PVC MAINLINE (MIN. 18" COVER) , FOR 1-1/2" AND SMALLER AND CLASS 315 PVC FOR 2" AND LARGER							
	SCHEDULE 80 PVC SLEEVES (2 TIMES DIAMETER OF THE PIPE ENCLOSED)							
	UNDER VEHICLES PAVING - (36 INCHES) FOR PRESSURE MAINLINE							
	UNDER VEHICLE PAVING - (24 INCHES) FOR NON - PRESSURE LATERAL							

STATION NO.
GPM
VALVE SIZE

RICK ENGINEERING COMPANY
5620 Friars Road
San Diego, California 92110-2596
(619) 291-0707

REGISTERED LANDSCAPE ARCHITECT JACK T. NAKAWATASE 1871 STATE OF CALIFORNIA 6/16/97

ONA
Landscape Architecture • Planning
La Jolla Centre II
9255 Towne Centre Drive, Suite 340
San Diego, California 92121-3002
619 550-1375 • Fax 550-1380

96-020

DISTRICT APPROVED CHANGES			
No.	Description	Approved	Date
1	AS-BUILT		

BENCH MARK
Description STREET CENTERLINE MONUMENT
Location STATION 249+07.56 P.O.C. ON EL CAMINO REAL
Record From COUNTY OF SAN DIEGO R1800 (249+07.56)
Elevation 307.874 Datum M.S.L.

L-1

CARLSBAD MUNICIPAL WATER DISTRICT

SHEET 7 | ENGINEERING DEPARTMENT | 48 SHEETS

PLANS FOR THE IMPROVEMENT OF:

POINSETTIA SEWAGE LIFT STATION

William E. Plummer 28176 RCE 6-27-97
District Engineer: WILLIAM E. PLUMMER REGISTRATION EXPIRES 3-31-98 Date

Drawn
Checked CMWD 95-402

PD 411

/usr/projdata/r_11994/psisc2.dgn 21-AUG-1996 12:56

11994#SLSC2

331-1E
7 of 48
062000

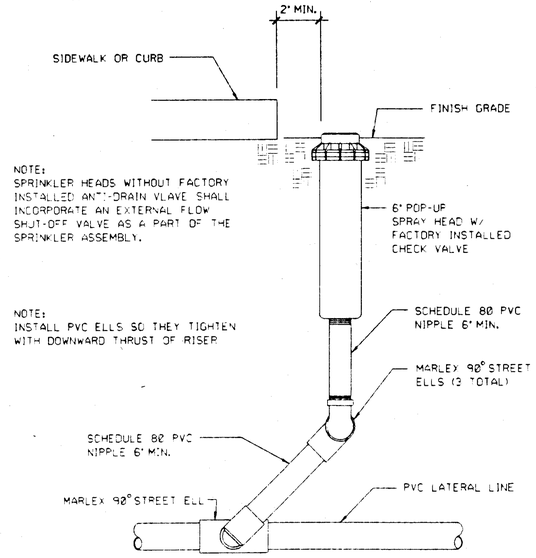

A 6" POP-UP SPRINKLER HEAD
NO SCALE

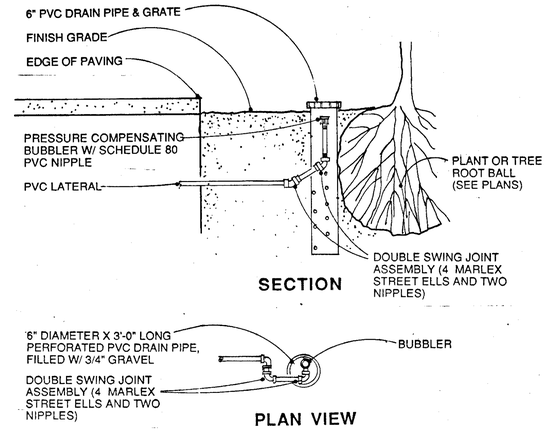

B BELOW GRADE BUBBLER

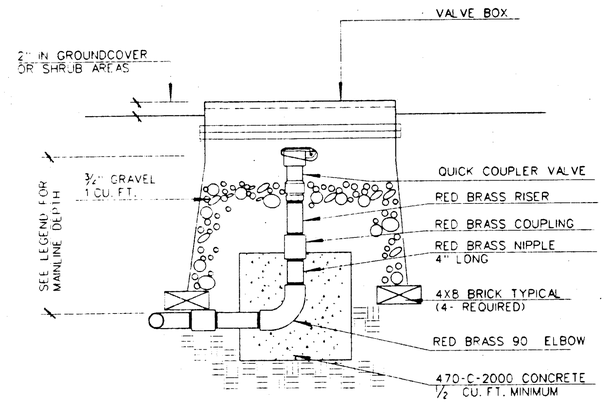

C QUICK COUPLING VALVE
NO SCALE

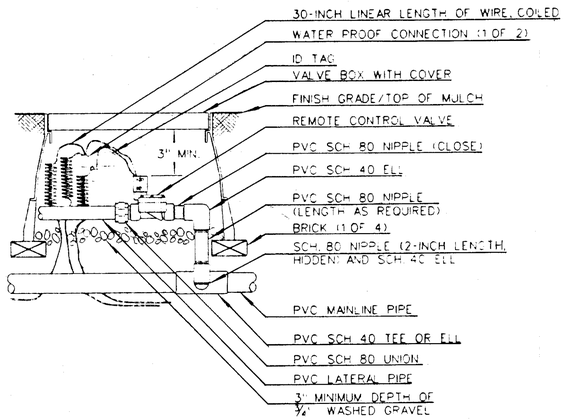

D REMOTE CONTROL VALVE
NO SCALE

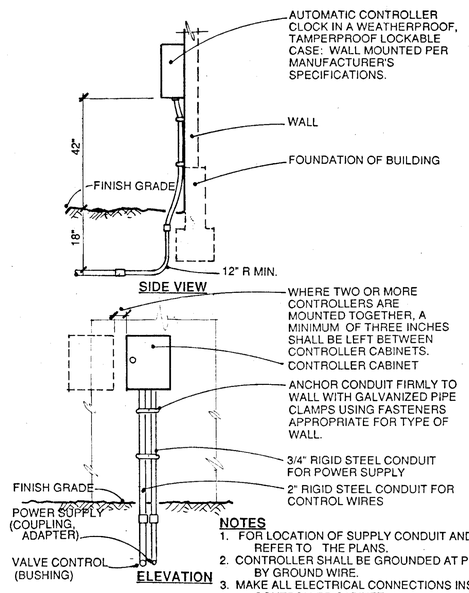

NOTES
1. FOR LOCATION OF SUPPLY CONDUIT AND CONDUCTOR, REFER TO THE PLANS.
2. CONTROLLER SHALL BE GROUNDED AT POWER SUPPLY BY GROUND WIRE.
3. MAKE ALL ELECTRICAL CONNECTIONS INSIDE CONTROLLER CABINET.
4. EACH CONTROLLER SHALL HAVE A POWER ON/OFF SWITCH, WITH LOCK-OUT, TAG-OUT FACILITY.

E IRRIGATION SYSTEMS ELECTRIC
CONTROLLER CLOCK WALL MOUNTING

TYPICAL MOUNTING USING INSTALLATION KIT

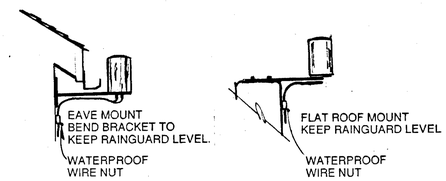

ATTACH WIRE TO WALL WITH APPROPRIATE WALL CLAMP. WIRE SHALL BE THE SAME GAUGE AS USED PER IRRIGATION INSTALLATION.

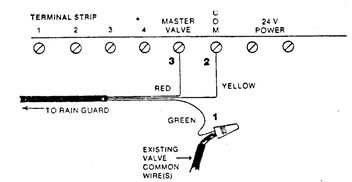

NOTE:
CONTRACTOR SHALL VERIFY CONNECTION WITH MANUFACTURER PRIOR TO CONNECTION OF CONTROLLER - VARIOUS OTHER CONTROLLERS HAVE DIFFERENT CONNECTION.

CONTACT: **WATER CONSERVATION SYSTEMS, INC.**
840 WEST NINTH STREET SUITE D
UPLAND, CALIFORNIA 91786
TEL: 714 920-3131

F "RAIN GUARD" INSTALLATION ON BUILDING

L-2

CARLSBAD MUNICIPAL WATER DISTRICT

SHEET		
8	ENGINEERING DEPARTMENT	48 SHEETS

PLANS FOR THE IMPROVEMENT OF:

POINSETTIA
SEWAGE LIFT STATION

William E. Plummer 28176 6-23-97
District Engineer: WILLIAM E. PLUMMER RCE Date
REGISTRATION EXPIRES 3-31-98

Drawn
Checked
CMWD 95-402

331-1E
8 of 48

PD 411

RICK ENGINEERING COMPANY
5620 Friars Road
San Diego,
California 92110-2596
(619) 291-0707

REGISTERED LANDSCAPE ARCHITECT
JACK T. NAKAWATARE
6/16/97
STATE OF CALIFORNIA

ONA
Landscape Architecture • Planning
La Jolla Centre II
9255 Towne Centre Drive, Suite 340
San Diego, California 92121-3002
619 550-1575 • Fax 550-1360
96-020

DISTRICT APPROVED CHANGES			
No.	Description	Approved	Date
1	AS-BUILT		

BENCH MARK
Description: STREET CENTERLINE MONUMENT
Location: STATION 249+07.56 P.O.C. ON EL CAMINO REAL
Record From: COUNTY OF SAN DIEGO RI800 (249+07.56)
Elevation: 307.874 Datum: M.S.L.

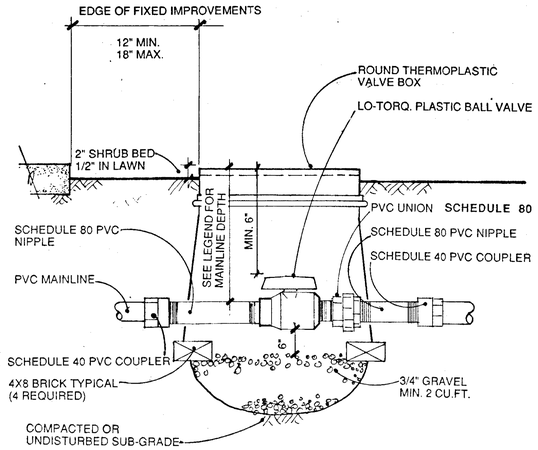

G LO-TORQ PLASTIC BALL VALVE

SLEEVE CHART FOR IRRIGATION PIPE AND WIRES			
PIPE	SCHEDULE 40 PVC SLEEVE SIZE	CONTROLLER WIRES	SCHEDULE 40 PVC SLEEVE SIZE
3/4"	2"	1-18	2"
1"	2"	19-24	2-1/2"
1-1/4"	2-1/2"	25-36	3"
1-1/2"	3"	37-48	4"
2"	4"	49-72	6"
2-1/2"	6"		
3"	6"		
4"	8"		

NOTE: SLEEVE CHART IS FOR THE CONVENIENCE TO THE CONTRACTOR. CONTRACTOR SHALL PROVIDE ADEQUATE PIPE SLEEVE SIZE TO ACCOMMODATE THE INSTALLATION OF THE IRRIGATION PIPE AND WIRES

H SLEEVE CHART FOR IRRIGATION PIPE AND WIRES

IRRIGATION NOTES

WATER SOURCE

STATIC PRESSURES AT WATER CONNECTIONS 80 PSI

THIS WATER PRESSURE INFORMATION WAS OBTAINED FROM THE CARLSBAD MUNICIPAL WATER DISTRICT 1996.

CALCULATED PRESSURE FOR EACH POINT OF CONNECTIONS ARE SHOWN ON THE PLANS. THE CONTRACTOR SHALL VERIFY WATER PRESSURE BY DIRECT MEASUREMENT IN THE FIELD. EXISTING PRESSURE IS NOT AS STATED ON THE PLANS THE CONTRACTOR SHALL NOTIFY THE OWNERS' REPRESENTATIVE BEFORE BEGINNING INSTALLATION.

1. IRRIGATION SYSTEM IS DIAGRAMMATIC AND SHOULD BE VERIFIED IN THE FIELD BY THE CONTRACTOR. IF CHANGES ARE NOTED IN THE FIELD THE CONTRACTOR SHALL NOTIFY ARCHITECT AND OWNERS REPRESENTATIVE PRIOR TO INSTALLATION OF IRRIGATION EQUIPMENT. CHANGES MADE IN THE FIELD MUST HAVE WRITTEN APPROVAL FROM THE OWNER FOR ADDITIONAL CHARGES TO THE JOB.

2. CONTRACTOR SHALL INSTALL THE FOLLOWING UNLESS OTHERWISE NOTED ON THE PLANS:
   A. ALL LATERAL END RUNS ARE TO BE 3/4"
   B. ALL LATERAL (NON-PRESSURE LINES CONNECTED DIRECTLY DOWNSTREAM OF THE REMOTE CONTROL VALVE) SHALL BE ONE SIZE LARGER THAN THE REMOTE CONTROL VALVE.
   C. MAINLINE END RUNS ARE TO 2"

3. CONTRACTOR SHALL INSTALL 6" POP-UP HEADS ALONG **FUTURE** WALKS AND CURBS TYPICALLY. NO SHRUB HEADS ON RISER WILL BE ACCEPTED ADJACENT TO **FUTURE** WALKS AND CURBS - SEE PLAN . POP-UP HEADS SHALL BE USED WITHIN 10' OF ANY PEDESTRIAN USE.

4. CONTRACTOR SHALL VERIFY LOCATION OF WATER AND ELECTRICAL POINT OF CONNECTION WITH OWNER. CONTRACTOR SHALL PULL NECESSARY PERMIT FOR WATER , ELECTRICAL, AND TELEPHONE - VERIFY WITH OWNER.

   CONTROLLER LOCATION ARE SHOWN DIAGRAMITICALLY. FINAL LOCATION TO BEE APPROVED BY THE OWNERS REPRESENTATIVE.

5. AL PIPE AND WIRE RUNS INSTALLED UNDER STREET PAVING SHALL BE SLEEVED. SLEEVES SHALL BE SCH.. 80 PVC.

   ALL SLEEVES SHALL BE TWO TIMES THE DIAMETER OF THE PIPE OR WIRE BUNDLE BE SLEEVED (2" MINIMUM) OR SIZED NOTED ON DRAWINGS.

6. CONTRACTOR SHALL INSTALL SCHEDULE 80 PVC SLEEVES FOR ALL **LATERAL LINES** UNDER PAVING. ALL **MAINLINE** UNDER PAVING SHALL BE INSTALLED WITH SCHEDULE 40 PVC PIPE. CONTRACTOR SHALL COORDINATE LAYING OF PIPE, SLEEVES, AND WIRES TO ENSURE THAT HE HAS ADEQUATE MEANS OF CONNECTION - SEE PLAN.

7. CONTRACTOR SHALL BE RESPONSIBLE FOR MAKING HIMSELF FAMILIAR WITH ALL UNDERGROUND UTILITIES, PIPES, AND STRUCTURES. CONTRACTOR SHALL TAKE SOLE RESPONSIBILITIES FOR COST INCURRED DUE TO DAMAGE AND REPLACEMENT OF SAID UTILITIES.

8. THE IRRIGATION CONTRACTOR SHALL FLUSH AND ADJUST ALL SPRINKLERS FOR OPTIMUM PERFORMANCE AND TO PREVENT OVER SPRAY ONTO WALKS, ROADWAY AND /OR BUILDING AS MUCH AS POSSIBLE.

9. CONTRACTOR SHALL INSTALL "RAINGUARD" AUTOMATIC SHUTOFF FOR IRRIGATION CONTROLLER; MANUFACTURED BY WATER CONSERVATION SYSTEMS INC. INSTALL PER MANUFACTURERS RECOMMENDATION.

10. BACKFLOW PREVENTER (REDUCED PRESSURE BACKFLOW PREVENTER) SHALL BE EXISTING

11. IN CASE OF WIRE FAILURE THE CONTRACTOR SHALL INSTALL TWO SPARE CONTROL WIRES FROM THE CONTROLLER TO THE FARTHEST VALVE ON EACH LEG OF THE MAINLINE. THESE WIRES SHALL PASS THROUGH ALL VALVE BOXES ALONG THE MAINLINE ROUTE. THESE WIRES SHALL BE A DIFFERENT COLOR FROM THE OTHER CONTROL WIRES AND BE LABELED AS SPARE AT CONTROLLER CABINET, IN THE VALVE BOX OF THE FARTHEST VALVE AND OTHER VALVE BOX.

L-3

CARLSBAD MUNICIPAL WATER DISTRICT

SHEET 9 | ENGINEERING DEPARTMENT | 48 SHEETS

PLANS FOR THE IMPROVEMENT OF:

POINSETTIA
SEWAGE LIFT STATION

William E. Plummer 28176 RCE 6-27-97
District Engineer: WILLIAM E. PLUMMER Date
REGISTRATION EXPIRES 3-31-98

Drawn
Checked

CMWD 95-402

PD 411

RICK ENGINEERING COMPANY
8620 Firaty Road
San Diego,
California 92111-2596
(619) 291-0707

REGISTERED LANDSCAPE ARCHITECT JOHN T. NAKAMATSU 1459 STATE OF CALIFORNIA 6/16/97

ONA
Landscape Architecture • Planning
La Jolla Centre II
9255 Towne Centre Drive, Suite 340
San Diego, California 92121-3002
619 550-1575 • Fax 550-1580

96-020

DISTRICT APPROVED CHANGES			
No.	Description	Approved	Date
1	AS-BUILT		

BENCH MARK
Description STREET CENTERLINE MONUMENT
Location STATION 249+07.56 P.O.C. ON EL CAMINO REAL
Record From COUNTY OF SAN DIEGO R1800 (249+07.56)
Elevation 307.874 Datum M.S.L.

11994PSL.SC2

331-1E
9 of 48

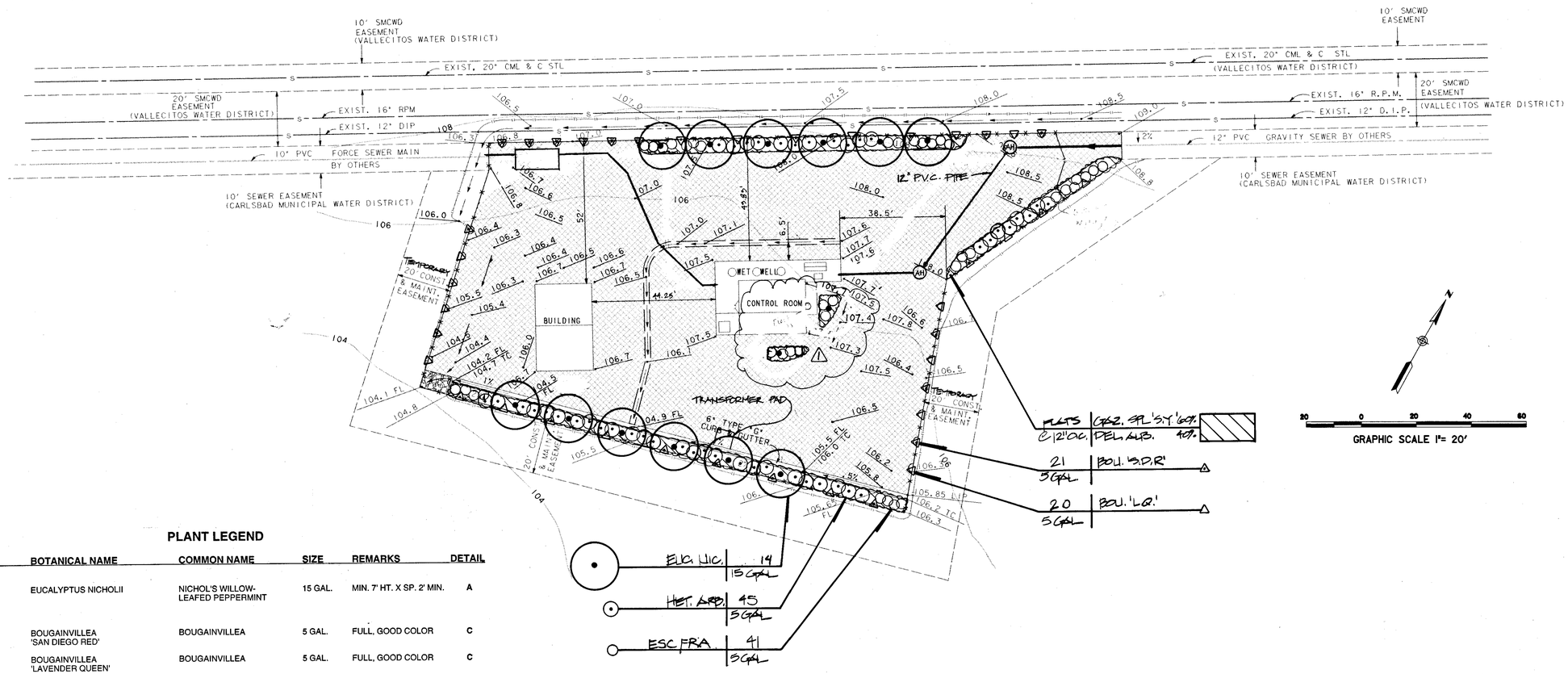

PLANT LEGEND

ABBREV.	BOTANICAL NAME	COMMON NAME	SIZE	REMARKS	DETAIL
TREES					
EUC. NIC	EUCALYPTUS NICHOLII	NICHOL'S WILLOW-LEAFED PEPPERMINT	15 GAL.	MIN. 7' HT. X SP. 2' MIN.	A
VINES					
BOU. 'S.D.R.'	BOUGAINVILLEA 'SAN DIEGO RED'	BOUGAINVILLEA	5 GAL.	FULL, GOOD COLOR	C
BOU. 'L.Q.'	BOUGAINVILLEA 'LAVENDER QUEEN'	BOUGAINVILLEA	5 GAL.	FULL, GOOD COLOR	C
SHRUBS					
ESC. FRA.	ESCALLONIA FRADESI	ESCALLONIA	5 GAL.	FULL, BUSHY, GOOD COLOR	B
HET. ARB.	HETEROMELES ARBUTIFOLIA	TOYON	5 GAL.	FULL, BUSHY, GOOD COLOR	B
GROUNDCOVER					
GAZ. SPL. 'S.Y.'	GAZANIA SPLENDENS (60%) 'SUNRISE YELLOW'	TRAILING GAZANIA	FLATS	*PLANT @ 12" O.C.	D
DEL. ALB.	DELOSPERMA ALBA (40%)	WHITE TRAILING ICEPLANT	FLATS	*PLANT @ 12" O.C.	D

*2" OF WOOD MULCH IN ALL GROUNDCOVER BEDS.

L-4

CARLSBAD MUNICIPAL WATER DISTRICT

SHEET 10 | ENGINEERING DEPARTMENT | 48 SHEETS

PLANTING PLAN & LEGEND FOR:

POINSETTIA SEWAGE LIFT STATION

William E. Plummer 28176 RCE 6-23-97
District Engineer: WILLIAM E. PLUMMER
REGISTRATION EXPIRES 3-31-98
Date

Drawn
Checked
CMWD 95-402

RICK ENGINEERING COMPANY
5620 Friars Road
San Diego, California 92110-2596
(619) 291-0707

REGISTERED LANDSCAPE ARCHITECT JACK T. NAKAWATASE 1168 STATE OF CALIFORNIA
Jack T. Nakawatase 6/16/97 DATE

ONA
La Jolla Centre II
9255 Towne Centre Drive, Suite 340
San Diego, California 92121-3002
619 550-1575 • Fax 550-1580
Landscape Architecture • Planning
96-020

DISTRICT APPROVED CHANGES

No.	Description	Approved	Date
1	AS-BUILT		

BENCH MARK
Description STREET CENTERLINE MONUMENT
Location STATION 249+07.56 P.O.C. ON EL CAMINO REAL
Record From COUNTY OF SAN DIEGO RI800 (249+07.56)
Elevation 307.874 Datum M.S.L.

PD 411

/usr/projdata/r_11994/pslsc2.dgn 21-AUG-1996 12:56

11994#PSLSC2

331-IE
10 of 48
062000

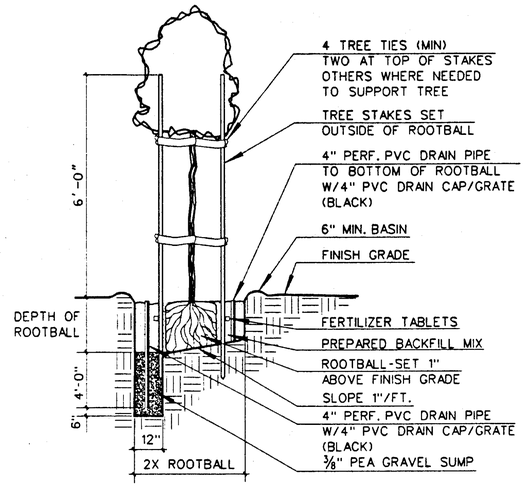

A TREE PLANTING & STAKING
NO SCALE

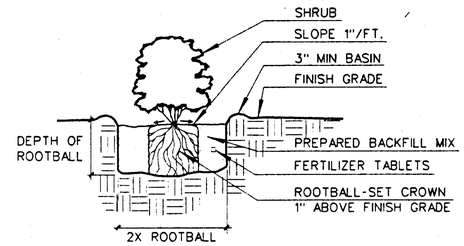

B SHRUB PLANTING
NO SCALE

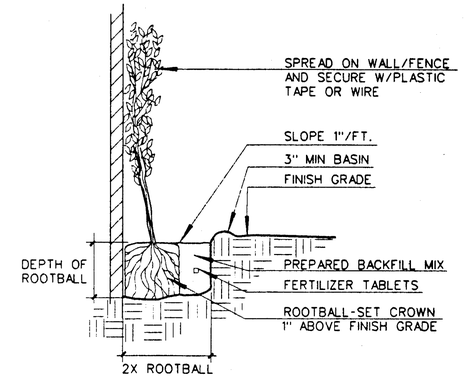

C VINE PLANTING
NO SCALE

PLANTING DISTANCE SCHEDULE

FEET ON CENTER 'A'	ROW DISTANCE 'B'	SET BACK 'C'
8"	7"	7"
1'-0"	10½"	11"
1'-3"	11"	1'-0"
1'-6"	1'-4"	1'-0"
2'-0"	1'-9"	1'-6"
3'-0"	2'-6"	2'-6"
6'-0"	5'-2"	5'-6"
8'-0"	6'-11"	7'-6"
10'-0"	8'-8"	9'-6"
12'-0"	10'-5"	11'-6"
20'-0"	17-4"	19'-6"

PLANTING GRID

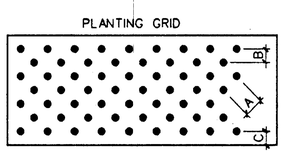

D GROUNDCOVER PLANTING
NO SCALE

REGISTERED LANDSCAPE ARCHITECT
JACK T. NAKAWATASE
6/25/97
STATE OF CALIFORNIA

ONA
Landscape Architecture • Planning
La Jolla Centre II
9255 Towne Centre Drive, Suite 340
San Diego, California 92121-3002
619 550-1575 • Fax 550-1580
96-020

DISTRICT APPROVED CHANGES			
No.	Description	Approved	Date
1	AS-BUILT		

BENCH MARK
Description STREET CENTERLINE MONUMENT
Location STATION 249+07.56 P.O.C. ON EL CAMINO REAL
Record From COUNTY OF SAN DIEGO R1800 (249+07.56)
Elevation 307.874 Datum M.S.L.

L-5

CARLSBAD MUNICIPAL WATER DISTRICT

SHEET 11 | ENGINEERING DEPARTMENT | 48 SHEETS

PLANTING DETAILS FOR:

POINSETTIA
SEWAGE LIFT STATION

William E. Plummer 28176 RCE 6-23-97
District Engineer: WILLIAM E. PLUMMER Date
REGISTRATION EXPIRES 3-31-98

Drawn
Checked
CMWD 95-402

PD 411

331-1E
11 of 48
000290

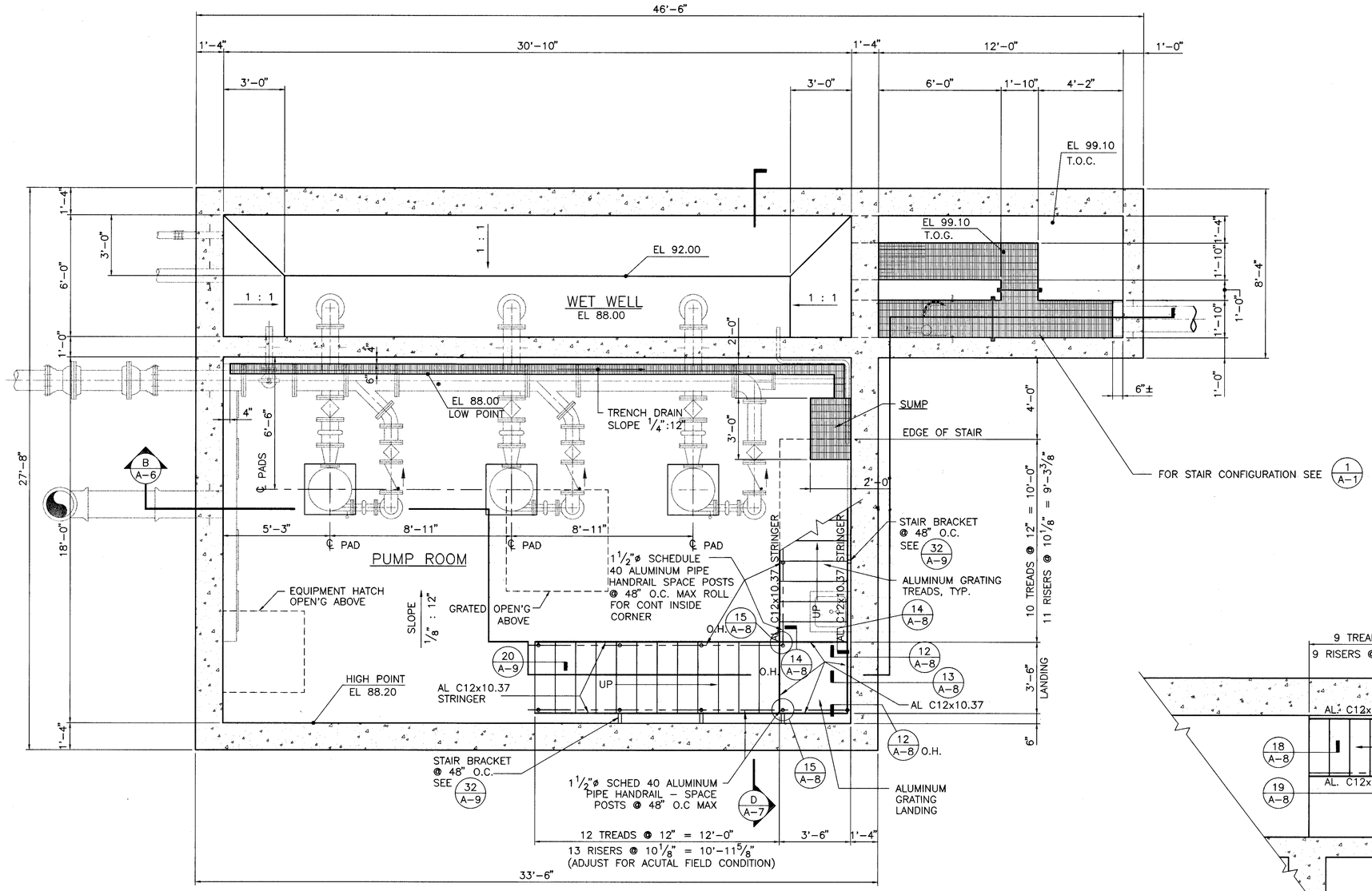

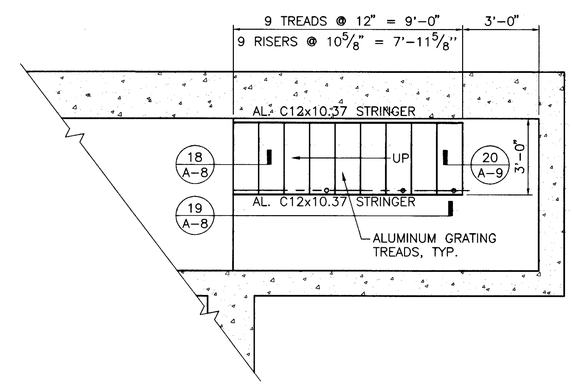

LOWER FLOOR PLAN (PUMP BUILDING)

3/8" = 1'-0"

NOTES:

1. FOR MECHANICAL EQUIPMENT AND PIPING, SEE MECHANICAL DRAWINGS.
2. FOR WALL AND SLAB CONSTRUCTION, SEE STRUCTURAL SHEETS.
3. SEE SHEET S-1 FOR NOTES AND ABBREVIATIONS.

COMMINUTOR VAULT STAIR PLAN

1/A-1

3/8" = 1'-0"

A-1

REGISTERED PROFESSIONAL ENGINEER CRAIG D. RIGBY No. 3715 Exp. 3/31/98 STRUCTURAL STATE OF CALIFORNIA

REGISTERED PROFESSIONAL ENGINEER ROBERT N. HENDERSHOT No. 2437 Exp. 6/30/97 STRUCTURAL STATE OF CALIFORNIA

R2H ENGINEERING, INC.
CONSULTING STRUCTURAL ENGINEERS
11545 W. BERNARDO CT., SUITE 300
SAN DIEGO, CALIFORNIA 92127
PHONE (619) 673-8416
FAX (619) 673-8418

DISTRICT APPROVED CHANGES

No.	Description	Approved	Date
1	AS-BUILT		

BENCH MARK

Description SEE TITLE SHEET
Location
Record From
Elevation Datum

CARLSBAD MUNICIPAL WATER DISTRICT

SHEET 12 | ENGINEERING DEPARTMENT | 48 SHEETS

PLANS FOR THE IMPROVEMENT OF:

LOWER FLOOR PLAN

POINSETTIA SEWAGE LIFT STATION

District Engineer WILLIAM E. PLUMMER 28176 RCE 6-23-97 Date
REGISTRATION EXPIRES 3-31-98

Drawn
Checked

CMWD 95-402

C:\DWG\96035\96035A01 6-16-97 5:11:03 pm EST

331-1E
12 of 48
00200

PD 411

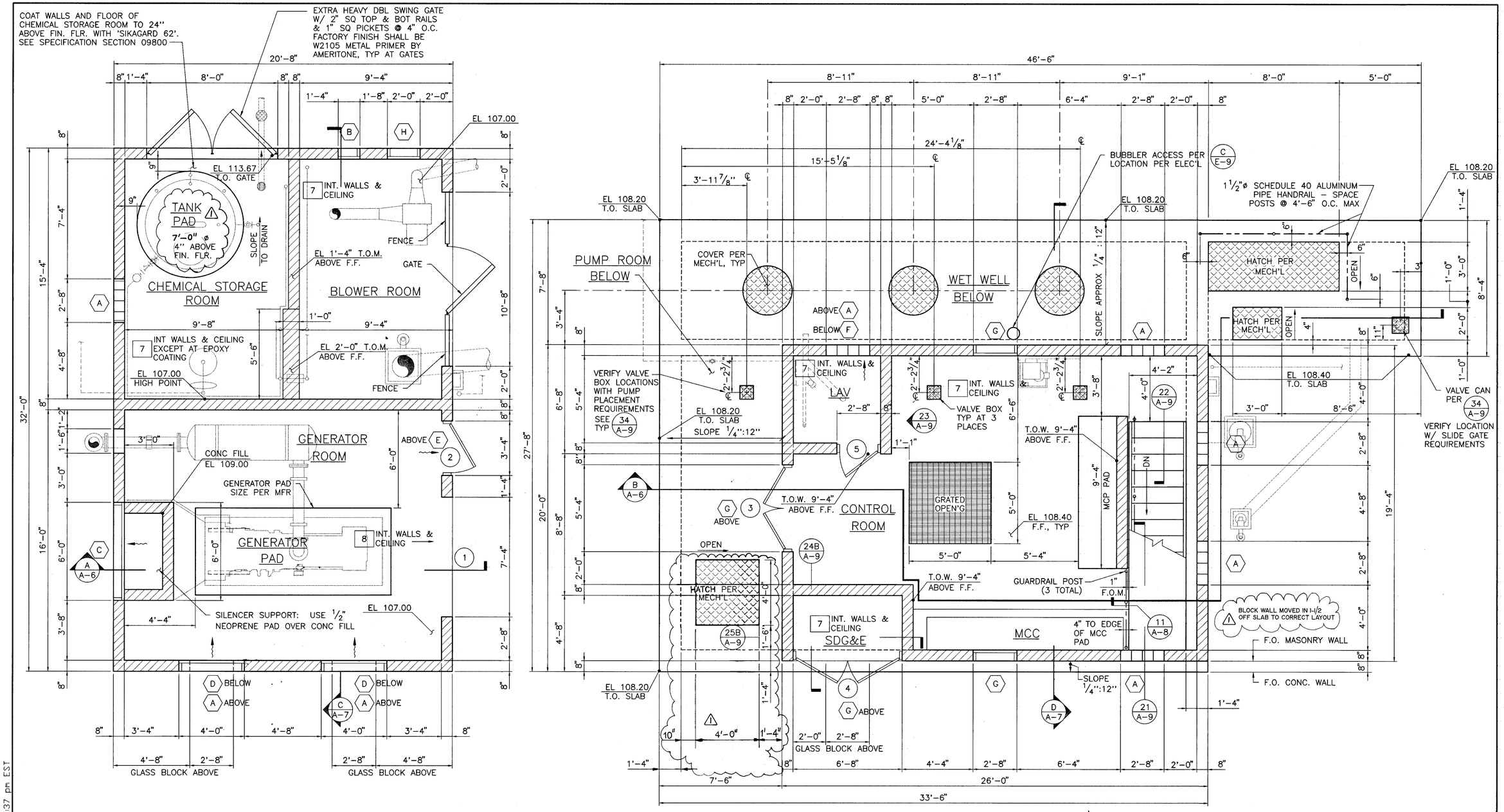

1	DENOTES DOOR NUMBER MARK PER SCHED ON A-3.
A	DENOTES LOUVER OR VENTILATOR LETTER MARK PER SCHED ON A-3.
1	DENOTES FINISH NUMBER MARK PER SCHED ON A-3.
	DENOTES MASONRY WALL

UPPER FLOOR PLANS

3/8" = 1'-0"

NOTES:

1. FOR MECHANICAL EQUIPMENT AND PIPING, SEE MECHANICAL DRAWINGS.
2. FOR FLOOR SLAB AND WALLS, SEE STRUCTURAL DRAWINGS.
3. SEE SHEET S-1 FOR NOTES AND ABBREVIATIONS.
4. T.O.W. INDICATES TOP OF WALL ELEVATION.

REGISTERED PROFESSIONAL ENGINEER DAVID D. RIGBY No. 3714 Exp. 3/31/98 STRUCTURAL STATE OF CALIFORNIA

REGISTERED PROFESSIONAL ENGINEER ROBERT H. HENDERSOT No. 2437 Exp. 6/30/97 STRUCTURAL STATE OF CALIFORNIA

R2H ENGINEERING, INC.
CONSULTING STRUCTURAL ENGINEERS
11545 W. BERNARDO CT., SUITE 300
SAN DIEGO, CALIFORNIA 92127
PHONE (619) 673-8416
FAX (619) 673-8418

DISTRICT APPROVED CHANGES

No.	Description	Approved	Date
1	AS-BUILT		

BENCH MARK

Description SEE TITLE SHEET
Location
Record From
Elevation Datum

A-2

CARLSBAD MUNICIPAL WATER DISTRICT

SHEET 13 | ENGINEERING DEPARTMENT | 48 SHEETS

PLANS FOR THE IMPROVEMENT OF:

UPPER FLOOR PLANS

POINSETTIA SEWAGE LIFT STATION

William E. Plummer 28176 RCE 6-23-97
District Engineer WILLIAM E. PLUMMER Date
REGISTRATION EXPIRES 3-31-98

Drawn
Checked

CMWD 95-402

C:\DWG\96035\96035A02 6-16-97 5:07:37 pm EST

331-1E

13 of 48

PD 411

DOOR SCHEDULE

MARK	OPEN'G SIZE W	H	TYPE	FRAME	HARDWARE
1	7'-4"	12'-0"	7'-4" x 12'-0" COILING ROLL-UP DOOR 18 GAGE MINIMUM ALUMINUM SLATS W/ HOOD. JAMB 5/A-8	PER MFR	PROVIDE SLIDE BOLT LOCK EA JAMB AT INSIDE.
2	3'-4"	7'-4"	3'-0" x 7'-2" x 1 3/4" SL-16 FLUSH ALUMINUM DOOR. HEAD 3/A-8 JAMB 4/A-8 THRSHLD 7/A-8	ALUMINUM SL-260 2" FACE x 6" DEEP	-STOREFRONT FUNCTION MORTISE LOCK PER 'SCHLAGE' L9070P-03A-US26D W/ APPROVED CITY LOCK TUMBLERS -SECURITY HINGES STANDARD WT S.S. 'HAGAR' B 1191-NRD 4 1/2 x 4 1/2-USD (4 EA PER DOOR) -'REESE' 772D WEATHERSTRIP -BUILDERS BRASS WORKS FLR DOOR STOP F9078X
3	5'-4"	6'-8"	2- 2'-6" x 6'-6" x 1 3/4" SL-16 FLUSH ALUMINUM DOORS. HEAD 3/A-8 JAMB 4/A-8 THRSHLD 7/A-8	ALUMINUM SL-260 2" FACE x 6" DEEP	-STOREFRONT FUNCTION MORTISE LOCK PER 'SCHLAGE' L9070P-03A-US26D W/ APPROVED CITY LOCK TUMBLERS. -SECURITY HINGES STANDARD WT S.S. 'HAGAR' BB 1191-NRP 4 1/2 x 4 1/2-US320 (4 EA PER DOOR) -'REESE' 772D WEATHERSTRIP -BUILDERS BRASS WORKS FLOOR DOOR STOP F9078X-US26D -BUILDERS BRASS WORKS FLUSH BOLT 5021-12"-US26D AT BOT; BOLT 5121-18"-US26D AT TOP
4	6'-8"	6'-8"	2- 3'-2" x 6'-6" x 1 3/4" SL-16 FLUSH ALUMINUM DOORS. HEAD 3/A-8 JAMB 4/A-8 THRSHLD 7/A-8	ALUMINUM SL-260 2" FACE x 6" DEEP	-STOREFRONT FUNCTION MORTISE LOCK PER 'SCHLAGE' L9070P-03A-US26D W/ APPROVED CITY LOCK TUMBLERS. -SECURITY HINGES STANDARD WT S.S. 'HAGAR' BB 1191-NRP 4 1/2 x 4 1/2-US320 (4 EA PER DOOR) -'REESE' 772D WEATHERSTRIP -BUILDERS BRASS WORKS FLOOR DOOR STOP F9078X-US26D -BUILDERS BRASS WORKS FLUSH BOLT 5021-12"-US26D AT BOT; BOLT 5121-18"-US26D AT TOP
5	2'-8"	6'-8"	2'-4" x 6'-6" x 1 3/4" SL-16 FLUSH ALUMINUM DOOR. HEAD 3/A-8 JAMB 4/A-8 THRSHLD 6/A-8	ALUMINUM SL-260 2" FACE x 6" DEEP	-PASSAGE SET PER 'SCHLAGE' L9010-03A-US26D -SECURITY HINGES STD WEIGHT S.S. 'HAGER' BB 1191-NRP 4 1/2" x 4 1/2" - US320 (4 EA PER DOOR) -'REESE' 772D WEATHERSTRIP -BUILDERS BRASS WORKS FLOOR DOOR STOP F9078X-US26D -SLIDE BOLT LOCK ON INT SIDE.

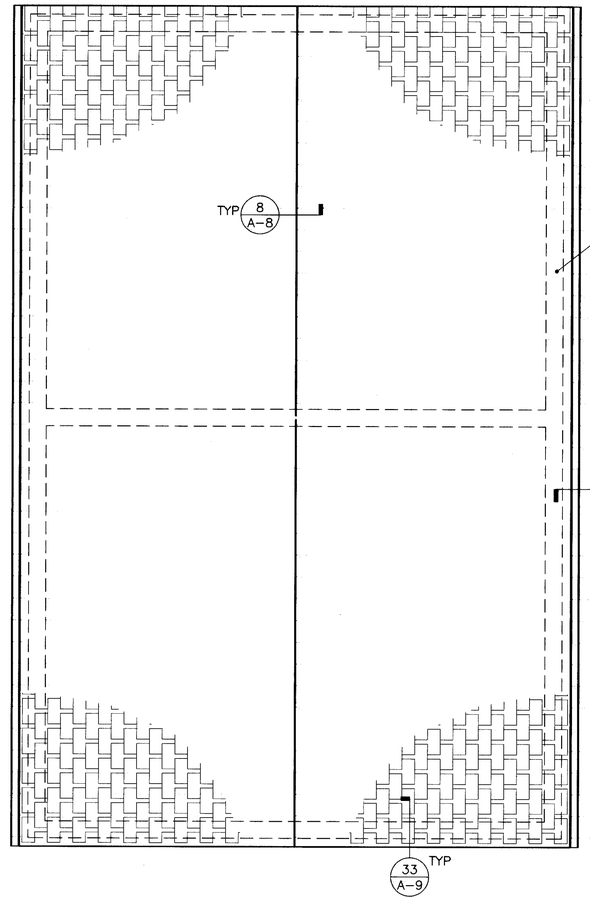

ROOF PLAN (GENERATOR BLDG.)

3/8" = 1'-0"

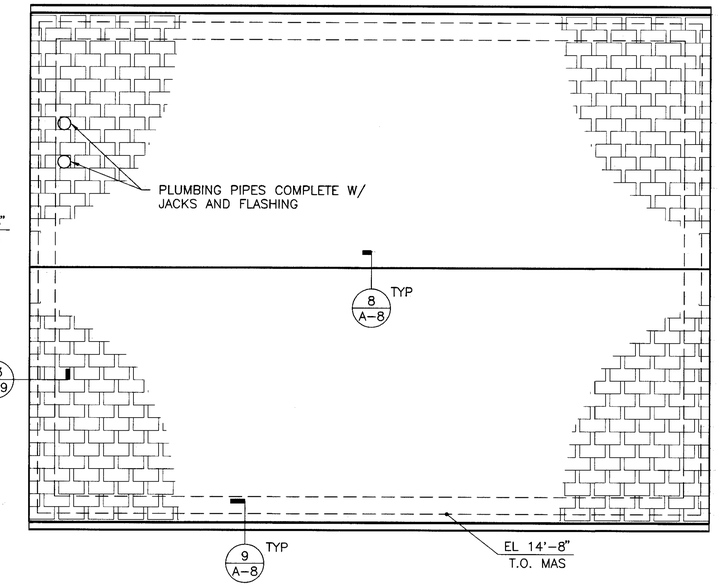

ROOF PLAN (PUMP BLDG.)

3/8" = 1'-0"

NOTES:

1. TOP OF LEDGER AND TOP OF WALL ELEVATIONS ARE HEIGHTS ABOVE FINISHED FLOOR.
2. TOP OF WALL ELEVATIONS ARE TO TOP OF MASONRY AND DO NOT INCLUDE WOOD TOP PLATES WHEN THEY OCCUR.

N

WINDOW/LOUVER/VENTILATOR SCHEDULE

MARK	OPEN'G SIZE W	H	TYPE	REMARKS
A	2'-8"	2'-8"	8 x 8 x 4 GLASS BLOCK	
B	1'-4"	1'-4"	LOUVER PER 1/A-8	SEE SPECIFICATIONS SECTION 10200
C	6'-0"	9'-0"	EXHAUST LOUVER PER 1/A-8	SEE SPECIFICATIONS SECTION 10200
D	4'-0"	6'-8"	INTAKE LOUVER PER 1/A-8	SEE SPECIFICATIONS SECTION 10200
E	1'-4"	1'-4"	WALL MOUNTED EXHAUSTFAN PER 2/A-8	SEE SPECIFICATIONS SECTION 15500
F	0'-8"	0'-8"	WALL MOUNTED EXHAUST FAN PER 2/A-8	SEE SPECIFICATIONS SECTION 15500
G	2'-8"	2'-8"	LOUVER PER 1/A-8	SEE SPECIFICATIONS SECTION 10200
H	2'-0"	2'-0"	EXHAUST LOUVER PER 1/A-8	SEE SPECIFICATIONS SECTION 10200

FINISH SCHEDULE

MARK	FINISH
1	SPLIT FACED CONCRETE BLOCK MASONRY UNITS, 8x8x16 COLORS: RCP BLOCK & BRICK-PADRE W/ BLACK CINDERS; MORTAR-GREY
2	HIGH-GLOSS PAINT PER SPECIFICATIONS SECT. 09900 COLOR: 'PATINA' BY SINCLAIR
3	HIGH-GLOSS PAINT PER SPECIFICATIONS SECT. 09900 COLOR: 'SEDONA' BY SINCLAIR
4	LOUVER WITH FACTORY APPLIED BAKED ENAMEL FINISH COLOR: 'PATINA' BY SINCLAIR
5	CLEAR 'THICKSET' GLASS MASONRY BLOCK UNITS, 8x8x4 'DECORA' PATTERN BY 'PC GLASS BLOCK'
6	CONCRETE 'SIERRASHAKE' ROOF TILE, (CLASS A) COLOR: 'SHADOW GRAY' #704 BY 'LIFETILE, INC.'
7	HIGH-GLOSS PAINT PER SPECIFICATIONS SECT. 09900 COLOR: 'SWAN' BY AMERITONE
8	2" THICK SIMI-RIGID FIBERGLASS SOUND ABSORBING MATERIAL OVER FINISH WALLS AND CEILING. SEE SPECIFICATION SECTION 15800.

TOILET ROOM NOTES

1. HEIGHT OF WATER CLOSETS TO TOP OF TOILET SEAT ARE 17" TO 19".
2. TOILET ROOM DOOR OPENABLE BY SINGLE EFFORT AND EQUIPPED WITH CLOSURES.
3. HOT WATER AND DRAIN PIPES TO BE INSULATED OR COVERED WITH NO SHARP SURFACES UNDER LAVATORY.
4. CONTROLS FOR LIGHTS, VENTS, ETC. PLACED 48" MAXIMUM ABOVE FLOOR.
5. MAXIMUM EFFORT TO OPERATE EXTERIOR DOORS - 8.5 LBS.
6. TOWEL BARS, PAPER DISPENSERS AND SOAP DISHES, ETC. PROVIDED ON OR WITHIN WALLS, SHALL BE INSTALLED AND SEALED TO PROTECT STRUCTURAL ELEMENTS FROM MOISTURE.
7. LAVATORY SHALL BE WALL HUNG, ENAMELED CAST IRON, 16" DEEP x 12" WIDE MIN W/ HOT & COLD TAPS THROUGH SINGLE FAUCET.

REGISTERED PROFESSIONAL ENGINEER — STEPHEN D. RUDDY — No. 1244 — Exp. 3/31/98 — STRUCTURAL — STATE OF CALIFORNIA

REGISTERED PROFESSIONAL ENGINEER — ROBERT H. HENDERSHOT — No. 2437 — Exp. 6/30/97 — STRUCTURAL — STATE OF CALIFORNIA

R2H ENGINEERING, INC.
CONSULTING STRUCTURAL ENGINEERS
11545 W. BERNARDO CT., SUITE 300
SAN DIEGO, CALIFORNIA 92127
PHONE (619) 673-8416
FAX (619) 673-8418

DISTRICT APPROVED CHANGES

No.	Description	Approved	Date
1	AS- BUILT		

BENCH MARK

Description SEE TITLE SHEET
Location
Record From
Elevation Datum

A-3

CARLSBAD MUNICIPAL WATER DISTRICT

SHEET 14 — ENGINEERING DEPARTMENT — 48 SHEETS

PLANS FOR THE IMPROVEMENT OF:

ROOF PLANS & SCHEDULES

POINSETTIA SEWAGE LIFT STATION

William E. Plummer 28176 RCE 6-23-97
District Engineer WILLIAM E. PLUMMER Date
REGISTRATION EXPIRES 3-31-98

Drawn
Checked

CMWD 95-402

PD 411

331-1E

14 of 48

C:\DWG\96035\96035A03 6-16-97 5:12:19 pm EST

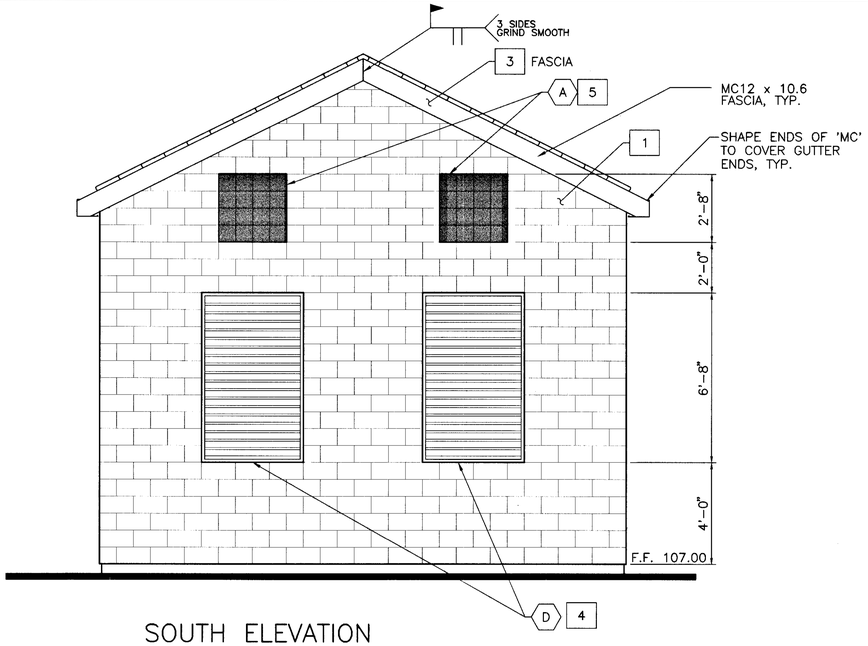

SOUTH ELEVATION

3/8" = 1'-0"

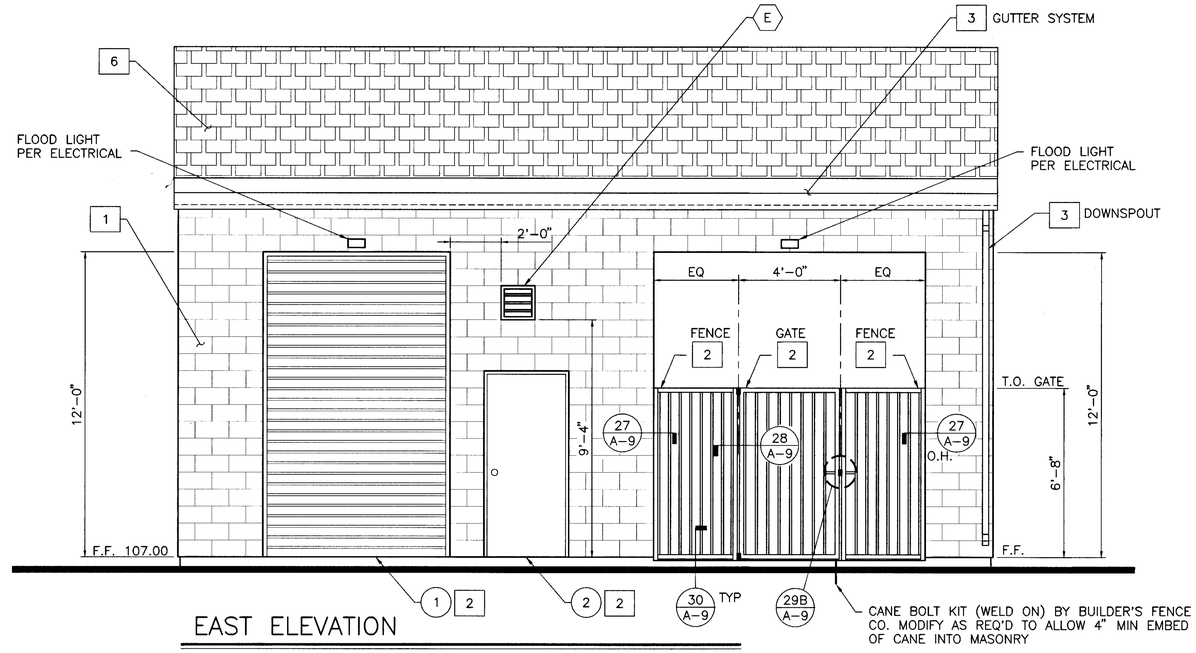

EAST ELEVATION

3/8" = 1'-0"

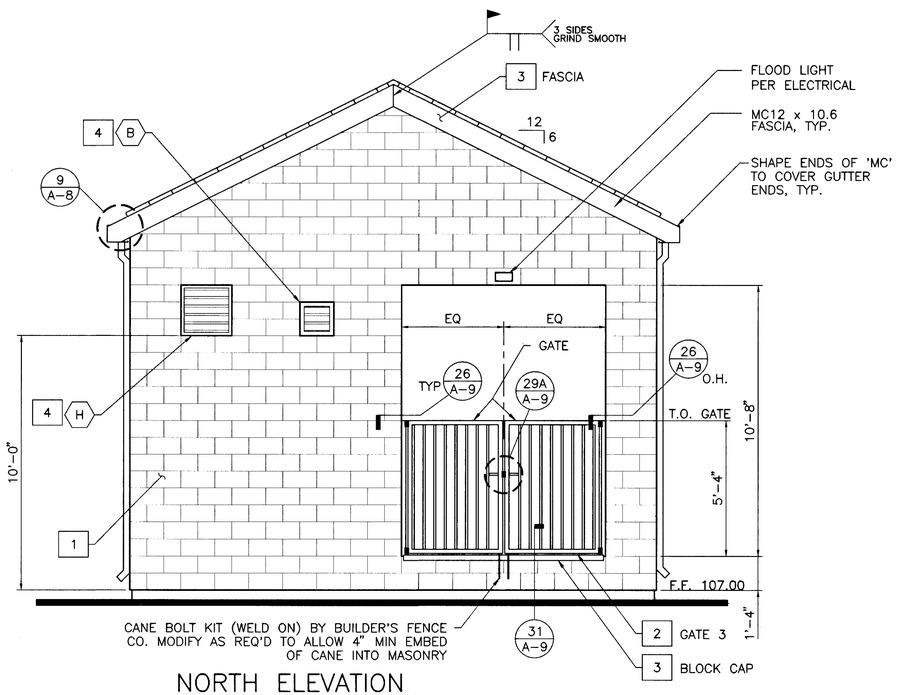

NORTH ELEVATION

3/8" = 1'-0"

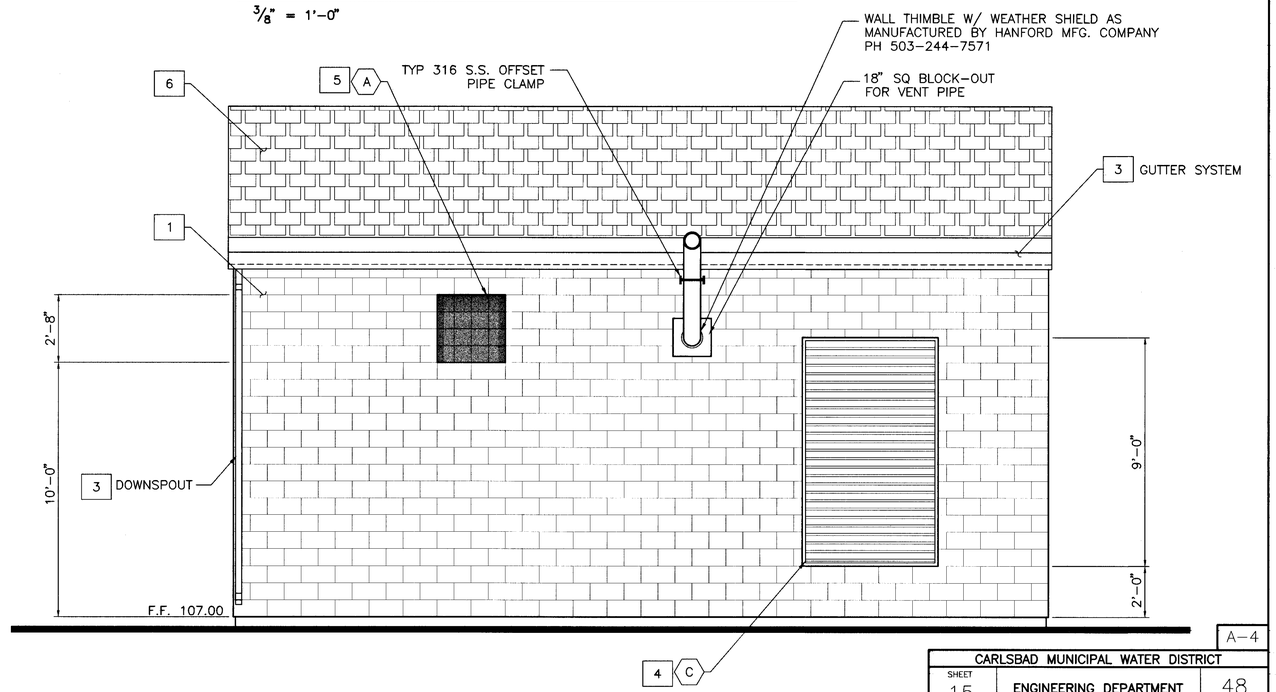

WEST ELEVATION

3/8" = 1'-0"

A-4

CARLSBAD MUNICIPAL WATER DISTRICT		
SHEET 15	ENGINEERING DEPARTMENT	48 SHEETS

PLANS FOR THE IMPROVEMENT OF:

GENERATOR BUILDING ELEVATIONS

POINSETTIA SEWAGE LIFT STATION

District Engineer WILLIAM E. PLUMMER 28176 RCE — REGISTRATION EXPIRES 3-31-98 — Date 6-23-97

Drawn

Checked

CMWD 95-402

REGISTERED PROFESSIONAL ENGINEER — ERIC D. RISH — No. 37147 — Exp. 3/31/98 — STRUCTURAL — STATE OF CALIFORNIA

REGISTERED PROFESSIONAL ENGINEER — ROBERT H. HENDERSOTT — No. 24371 — Exp. 6/30/97 — STRUCTURAL — STATE OF CALIFORNIA

R2H ENGINEERING, INC.
CONSULTING STRUCTURAL ENGINEERS
11545 W. BERNARDO CT., SUITE 300
SAN DIEGO, CALIFORNIA 92127
PHONE (619) 673-8416
FAX (619) 673-8418

DISTRICT APPROVED CHANGES

No.	Description	Approved	Date
1	AS-BUILT		

BENCH MARK

Description SEE TITLE SHEET

Location

Record From

Elevation Datum

C:\DWG\96035\96035A04 6-16-97 5:13:20 pm EST

331-1E

15 of 48

062000

PD 411

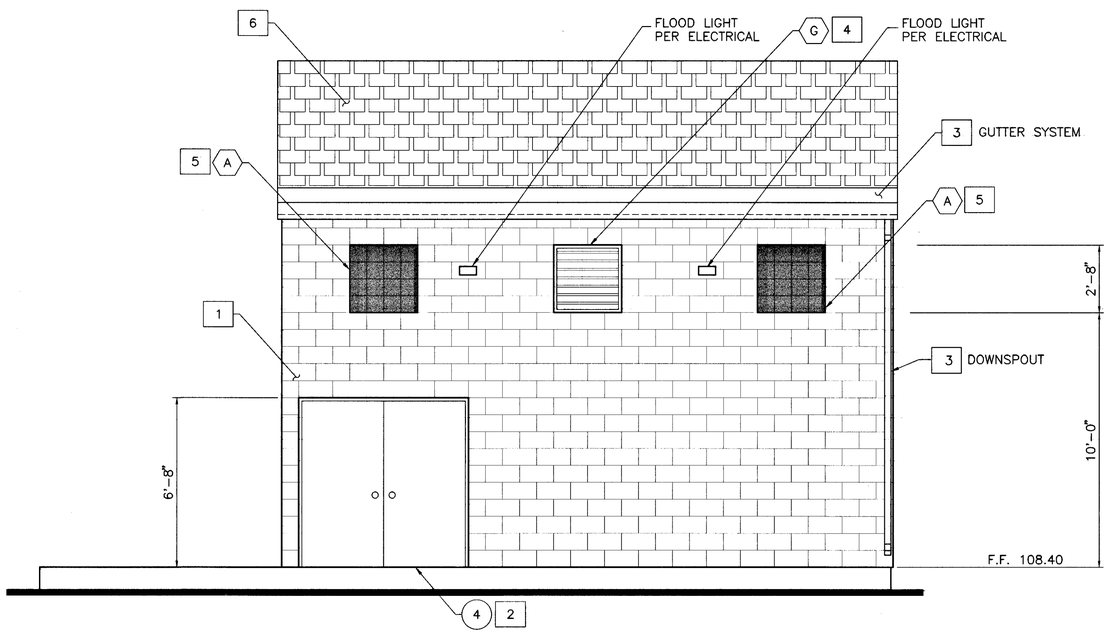

SOUTH ELEVATION

3/8" = 1'-0"

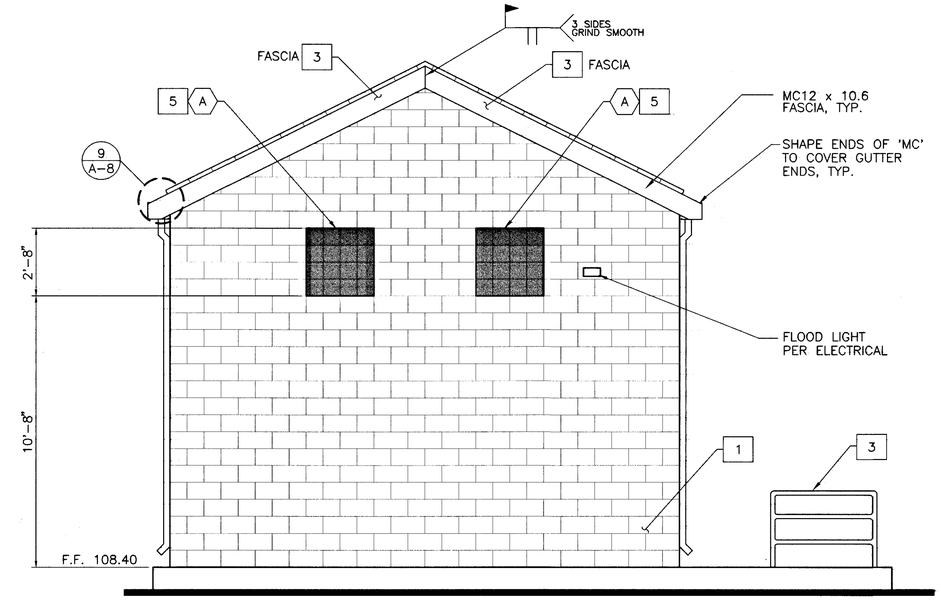

EAST ELEVATION

3/8" = 1'-0"

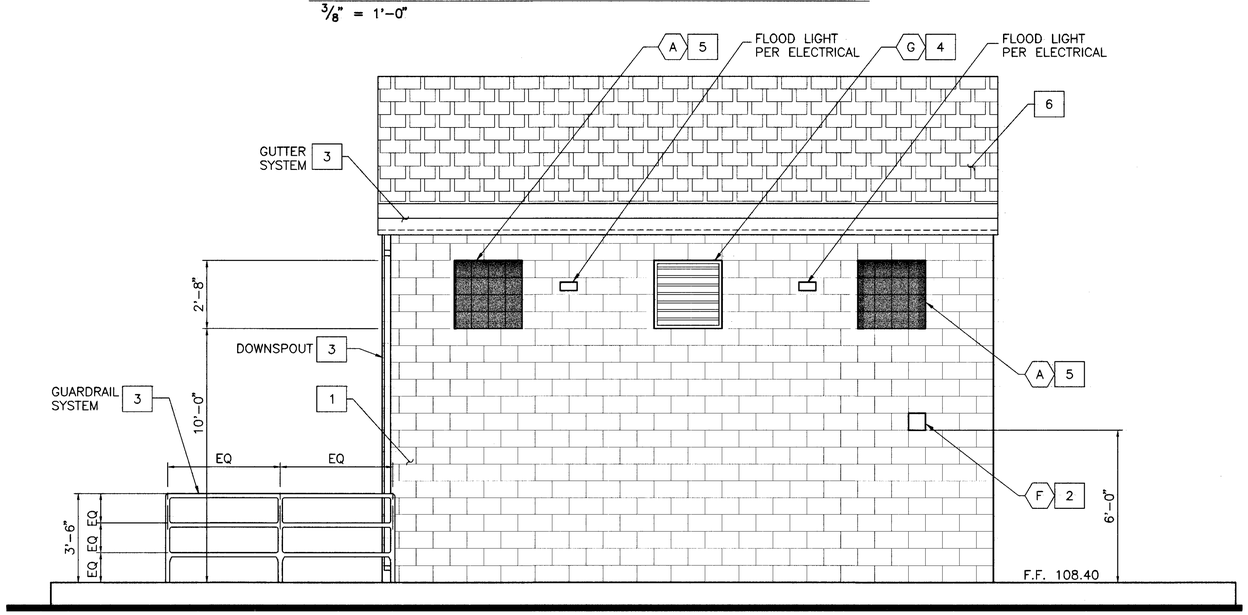

NORTH ELEVATION

3/8" = 1'-0"

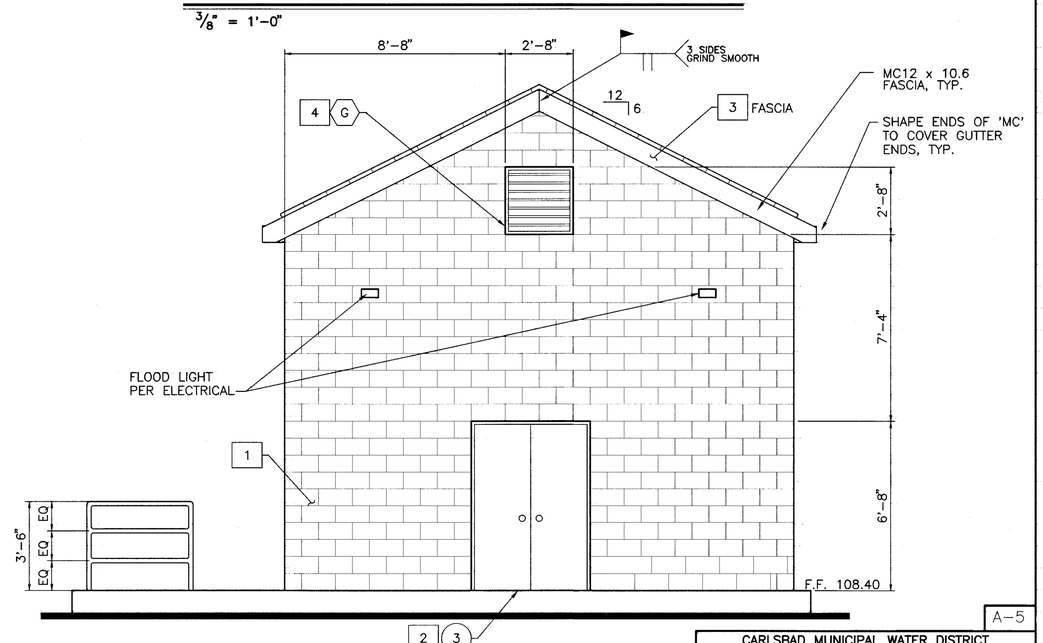

WEST ELEVATION

3/8" = 1'-0"

A-5

CARLSBAD MUNICIPAL WATER DISTRICT		
SHEET 16	ENGINEERING DEPARTMENT	48 SHEETS

PLANS FOR THE IMPROVEMENT OF:

PUMP BUILDING ELEVATIONS

POINSETTIA SEWAGE LIFT STATION

William E. Plummer 28176 RCE 6-23-97
District Engineer WILLIAM E. PLUMMER REGISTRATION EXPIRES 3-31-98 Date

Drawn

Checked

CMWD 95-402

REGISTERED PROFESSIONAL ENGINEER JOHN D. ROBY No. 32161 Exp. 3/31/98 STRUCTURAL STATE OF CALIFORNIA

REGISTERED PROFESSIONAL ENGINEER ROBERT H. HENDERSON No. 2437 Exp. 6/30/97 STRUCTURAL STATE OF CALIFORNIA

R2H ENGINEERING, INC.
CONSULTING STRUCTURAL ENGINEERS
11545 W. BERNARDO CT., SUITE 300
SAN DIEGO, CALIFORNIA 92127
PHONE (619) 673-8416
FAX (619) 673-8418

DISTRICT APPROVED CHANGES

No.	Description	Approved	Date
1	AS-BUILT		

BENCH MARK

Description SEE TITLE SHEET
Location
Record From
Elevation Datum

C:\DWG\96035\96035A05 6-16-97 5:14:09 pm EST

331-1E
16 of 48

PD 411

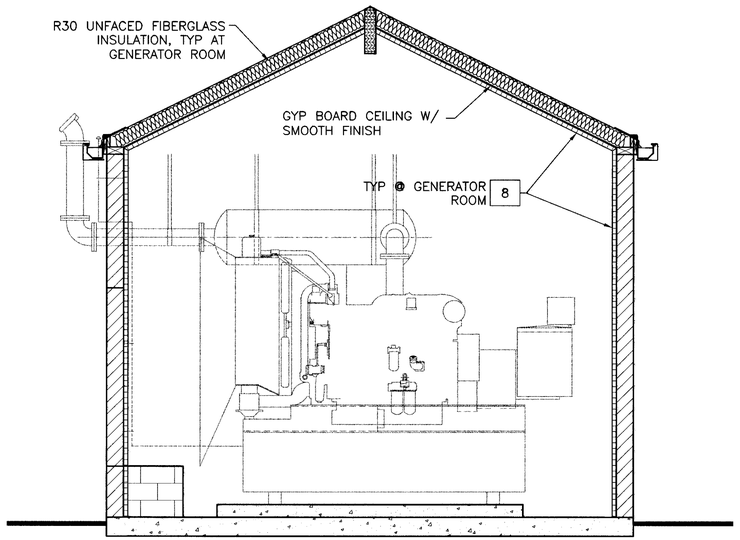

GENERATOR ROOM SECTION (A / A-2)

3/8" = 1'-0"

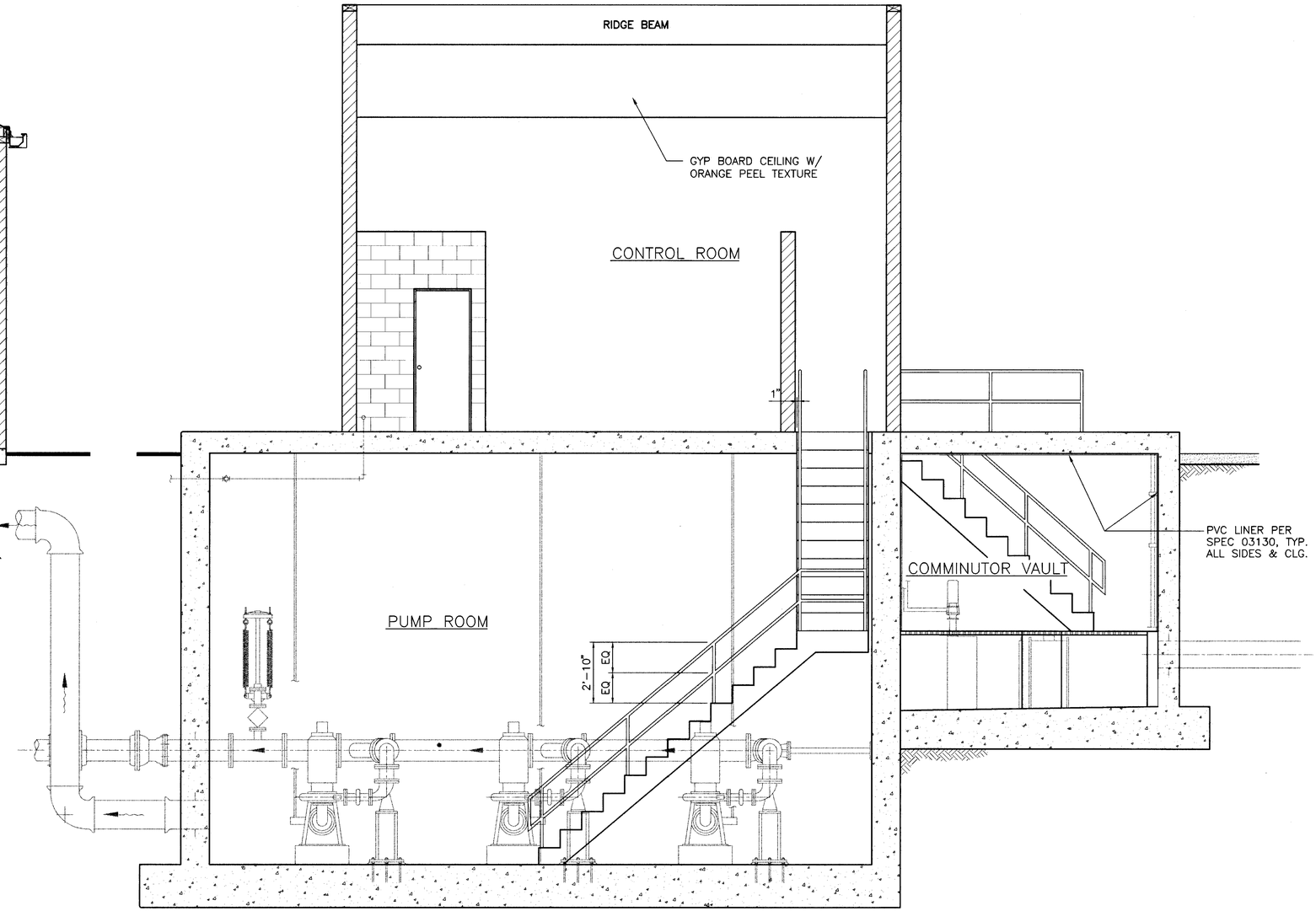

PUMP/CONTROL ROOM/COMMINUTOR VAULT SECTION (B / A-1)

3/8" = 1'-0"

A-6

CARLSBAD MUNICIPAL WATER DISTRICT		
SHEET 17	ENGINEERING DEPARTMENT	48 SHEETS

PLANS FOR THE IMPROVEMENT OF:

BUILDING SECTIONS

POINSETTIA SEWAGE LIFT STATION

District Engineer WILLIAM E. PLUMMER 28176 RCE — Date 6-23-97

REGISTRATION EXPIRES 3-31-98

Drawn

Checked

CMWD 95-402

REGISTERED PROFESSIONAL ENGINEER — JOHN D. RUBY — No. 37176 — STRUCTURAL — STATE OF CALIFORNIA

REGISTERED PROFESSIONAL ENGINEER — ROBERT H. HENDERSOTT — No. 2437 — Exp. 6/30/97 — STRUCTURAL — STATE OF CALIFORNIA

R2H ENGINEERING, INC.
CONSULTING STRUCTURAL ENGINEERS
11545 W. BERNARDO CT., SUITE 300
SAN DIEGO, CALIFORNIA 92127
PHONE (619) 673-8416
FAX (619) 673-8418

DISTRICT APPROVED CHANGES

No.	Description	Approved	Date
1	AS-BUILT		

BENCH MARK

Description SEE TITLE SHEET

Location

Record From

Elevation Datum

C:\DWG\96035\96035A06 6-16-97 5:15:17 pm EST

331-15 062100

17 of 48

PD 411

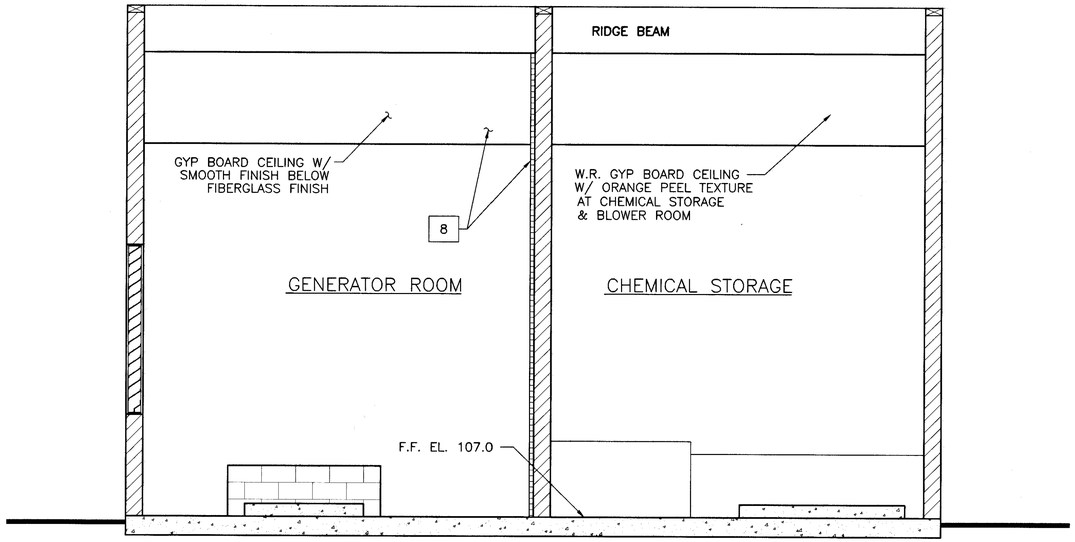

GENERATOR BUILDING SECTION

3/8" = 1'-0"

C A-2

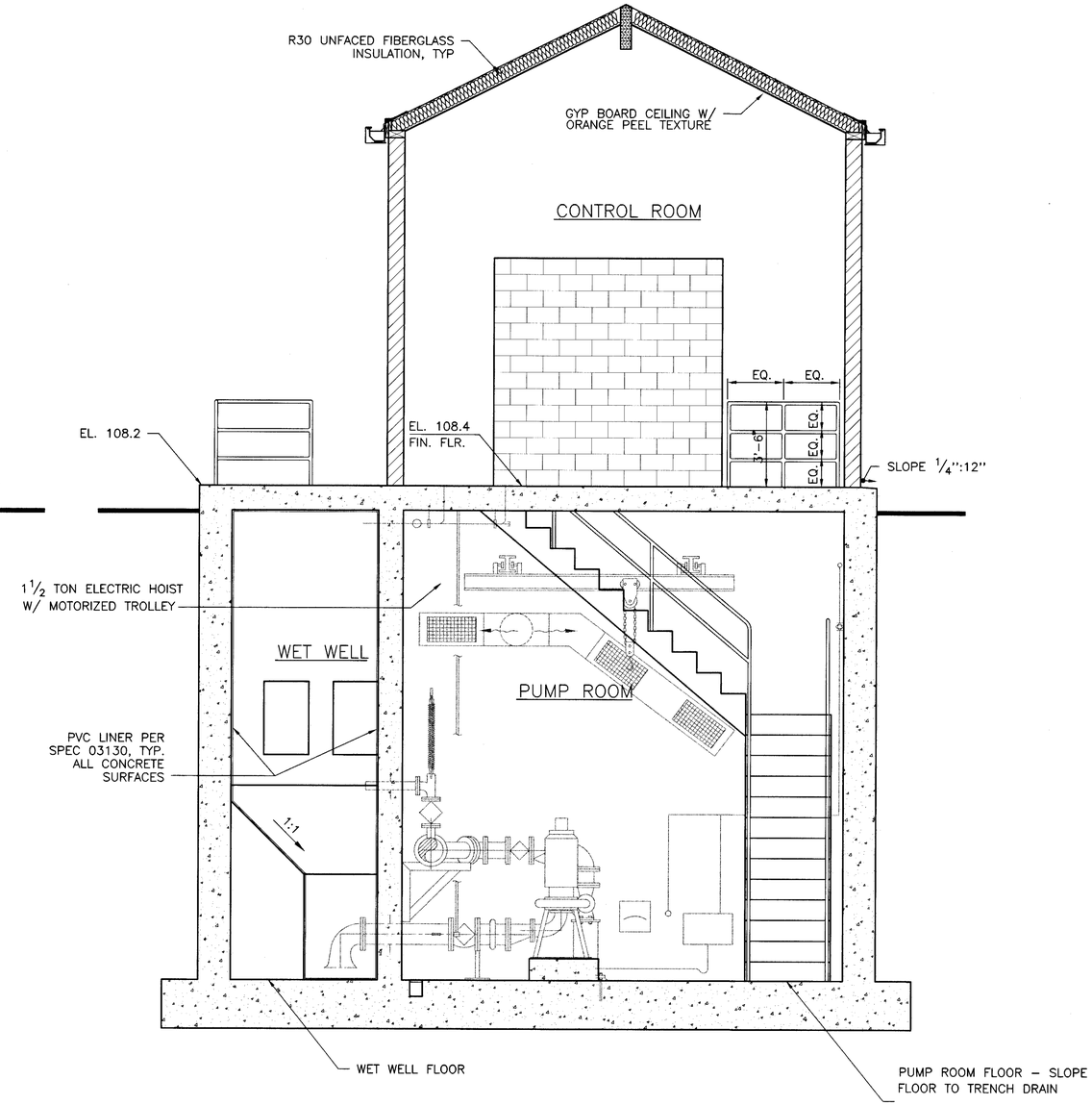

PUMP/CONTROL ROOM SECTION

3/8" = 1'-0"

D A-1

A-7

CARLSBAD MUNICIPAL WATER DISTRICT

SHEET		
18	ENGINEERING DEPARTMENT	48 SHEETS

PLANS FOR THE IMPROVEMENT OF:

BUILDING SECTIONS

POINSETTIA SEWAGE LIFT STATION

District Engineer WILLIAM E. PLUMMER RCE 28176 Date 6-23-97

REGISTRATION EXPIRES 3-31-98

Drawn

Checked

CMWD 95-402

REGISTERED PROFESSIONAL ENGINEER RICHARD D. RIGBY No. 3714 Exp. 3/31/98 STRUCTURAL STATE OF CALIFORNIA

REGISTERED PROFESSIONAL ENGINEER ROBERT W. HENDRICKSOT No. 2437 Exp. 6/30/97 STRUCTURAL STATE OF CALIFORNIA

R2H ENGINEERING, INC.
CONSULTING STRUCTURAL ENGINEERS
11545 W. BERNARDO CT., SUITE 300
SAN DIEGO, CALIFORNIA 92127
PHONE (619) 673-8416
FAX (619) 673-8418

DISTRICT APPROVED CHANGES

No.	Description	Approved	Date
1	AS-BUILT		

BENCH MARK

Description SEE TITLE SHEET

Location

Record From

Elevation Datum

C:\DWG\96035\96035A07 6-16-97 5:16:09 pm EST

331-1E

18 of 48

PD 411

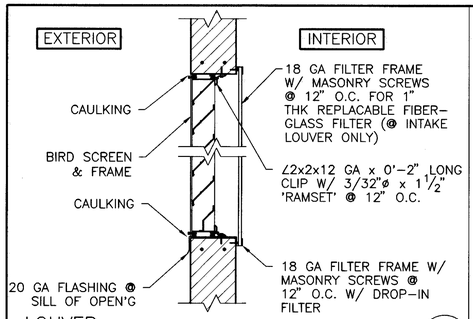

LOUVER — 1 / A-3
1" = 1'-0"

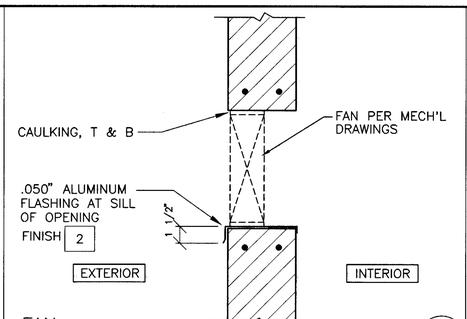

FAN — 2 / A-3
1 1/2" = 1'-0"

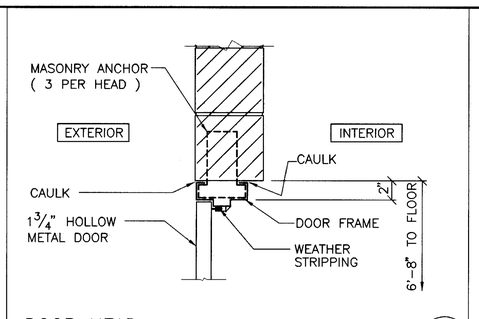

DOOR HEAD — 3 / A-3
1 1/2" = 1'-0"

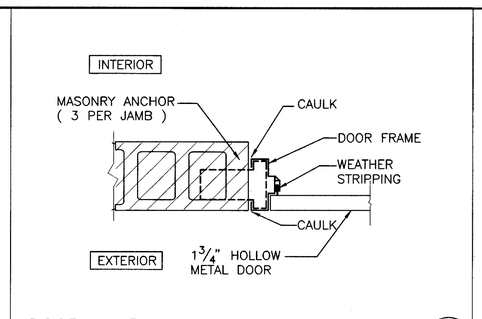

DOOR JAMB — 4 / A-3
1 1/2" = 1'-0"

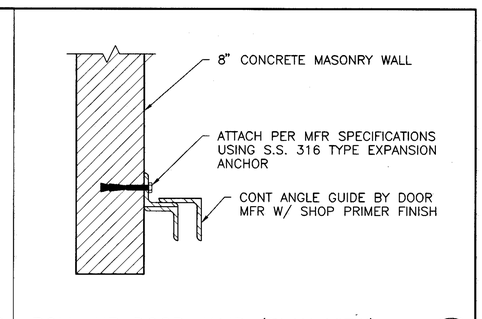

ROLL-UP DOOR JAMB (PLAN VIEW) — 5 / A-3
1 1/2" = 1'-0"

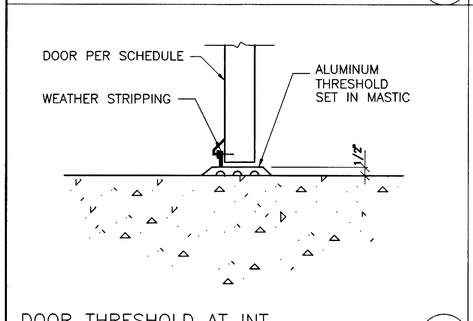

DOOR THRESHOLD AT INT — 6 / A-3
3" = 1'-0"

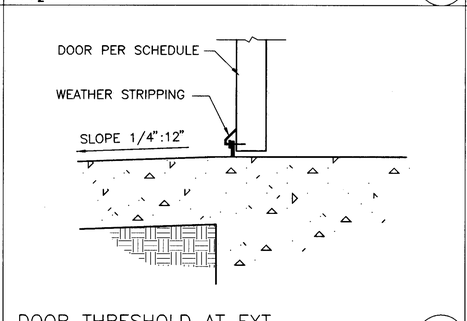

DOOR THRESHOLD AT EXT — 7 / A-3
3" = 1'-0"

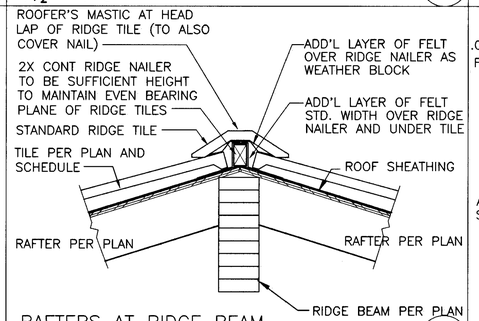

RAFTERS AT RIDGE BEAM — 8 / A-3
3" = 1'-0"

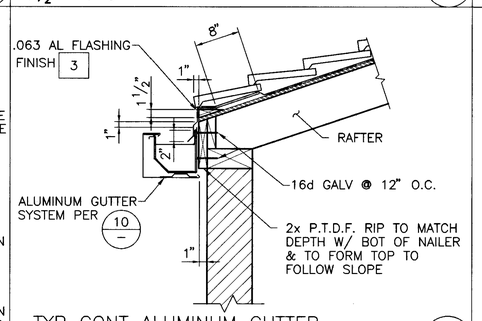

TYP CONT ALUMINUM GUTTER — 9 / A-8
1" = 1'-0"

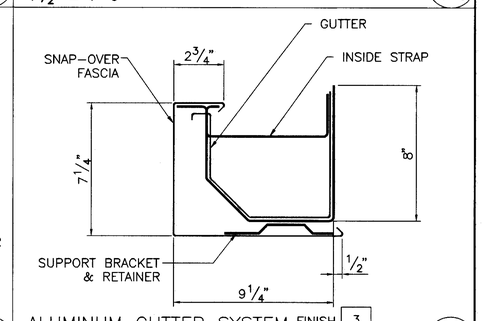

ALUMINUM GUTTER SYSTEM FINISH 3 — 10 / -
3" = 1'-0"

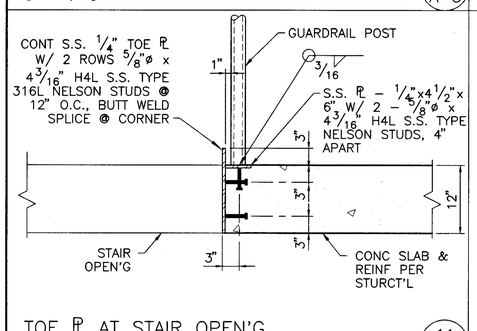

TOE ℙ AT STAIR OPEN'G — 11 / A-2
1" = 1'-0"

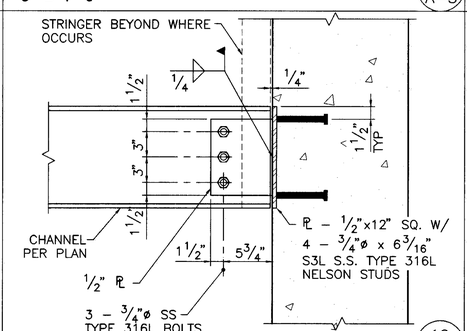

12 / A-1
1 1/2" = 1'-0"

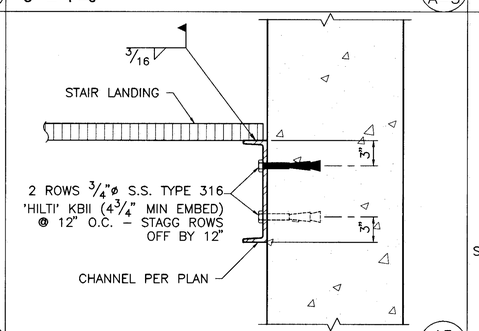

13 / A-1
1 1/2" = 1'-0"

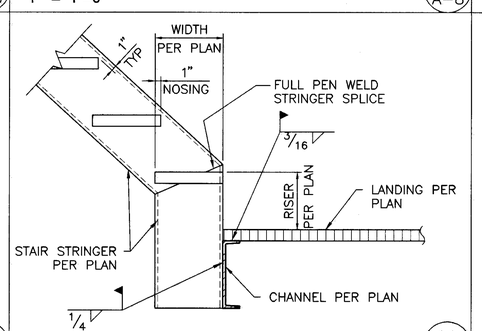

14 / A-1
1" = 1'-0"

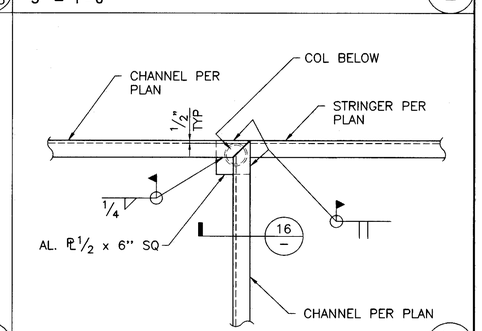

15 / A-1
1" = 1'-0"

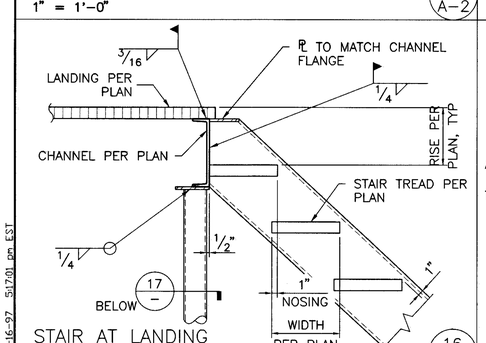

STAIR AT LANDING — 16 / -
1" = 1'-0"

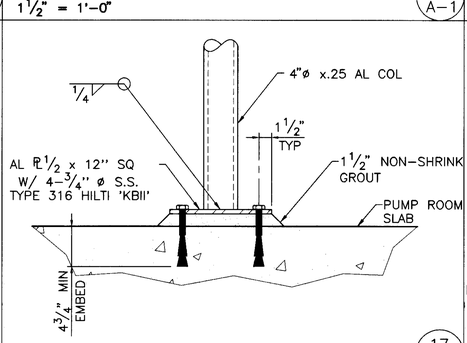

17 / -
1 1/2" = 1'-0"

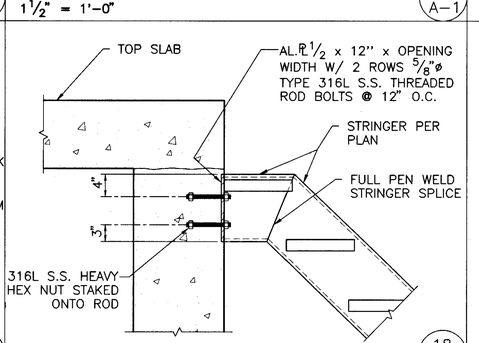

18 / A-1
1" = 1'-0"

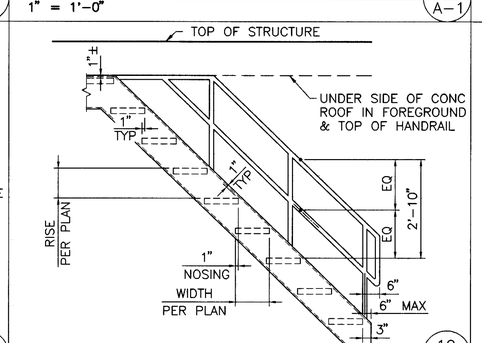

19 / A-1
1/2" = 1'-0"

A-8

CARLSBAD MUNICIPAL WATER DISTRICT		
SHEET 19	ENGINEERING DEPARTMENT	48 SHEETS

PLANS FOR THE IMPROVEMENT OF:
ARCHITECTURAL DETAILS
POINSETTIA SEWAGE LIFT STATION

William E. Plummer 28176 — District Engineer WILLIAM E. PLUMMER RCE — REGISTRATION EXPIRES 3-31-98 — Date 6-23-97

Drawn
Checked
CMWD 95-402

REGISTERED PROFESSIONAL ENGINEER — DAVID D. RUDY — No. 3714 — Exp. 3/31/98 — STRUCTURAL — STATE OF CALIFORNIA

REGISTERED PROFESSIONAL ENGINEER — ROBERT H. HENDERSHOT — No. 2437 — Exp. 6/30/97 — STRUCTURAL — STATE OF CALIFORNIA

R2H ENGINEERING, INC.
CONSULTING STRUCTURAL ENGINEERS
11545 W. BERNARDO CT., SUITE 300
SAN DIEGO, CALIFORNIA 92127
PHONE (619) 673-8416
FAX (619) 673-8418

DISTRICT APPROVED CHANGES

No.	Description	Approved	Date
1	AS-BUILT		

BENCH MARK
Description SEE TITLE SHEET
Location
Record From
Elevation Datum

331-1E
19 of 48
00000

PD 411

C:\DWG\96035\96035A08 6-16-97 5:17:01 pm EST

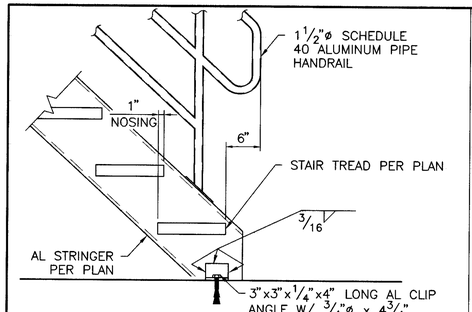

STAIR AT BASE — 20 / A-1

1" = 1'-0"

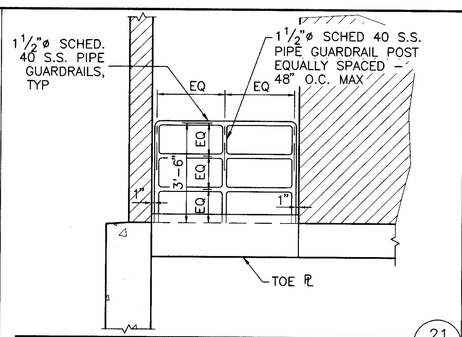

1/2" = 1'-0" — 21 / A-2

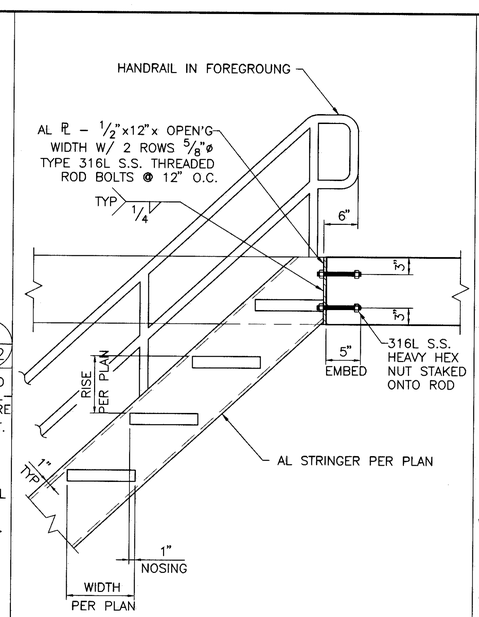

TOP OF STAIRS — 22 / A-2

1" = 1'-0"

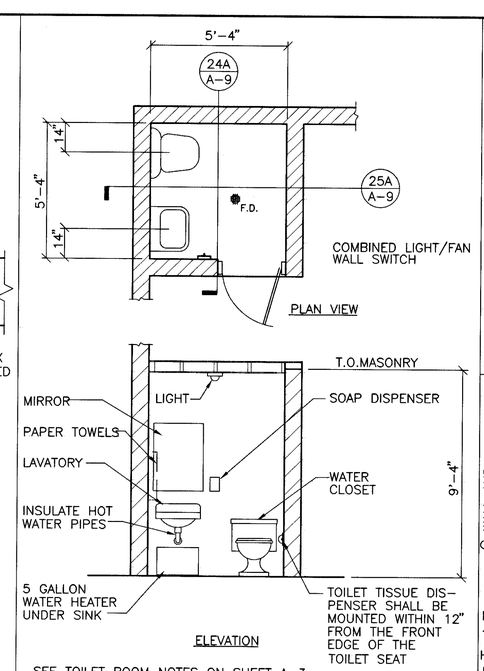

SEE TOILET ROOM NOTES ON SHEET A-3

TOILET ROOM PLAN & ELEVATION — 23 / A-2

3/8" = 1'-0"

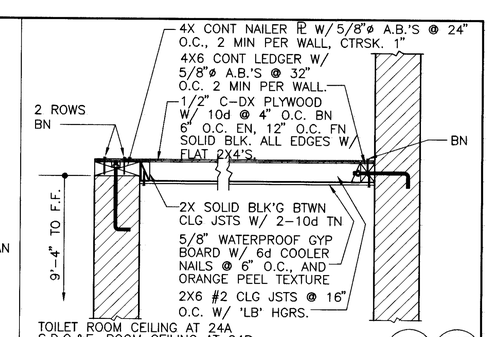

TOILET ROOM CEILING AT 24A
S.D.G.&E. ROOM CEILING AT 24B — 24A / A-2, 24B / A-2

1" = 1'-0"

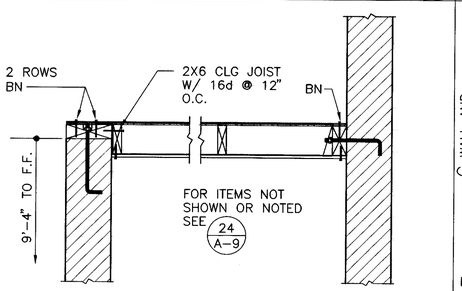

TOILET ROOM CEILING AT 25A
S.D.G.&E. ROOM CEILING AT 25B — 25A / A-2, 25B / A-2

1" = 1'-0"

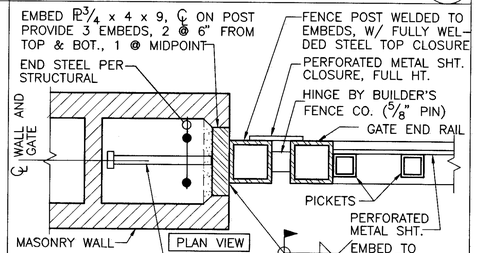

GATE AT WALL — 26 / A-4

3" = 1'-0"

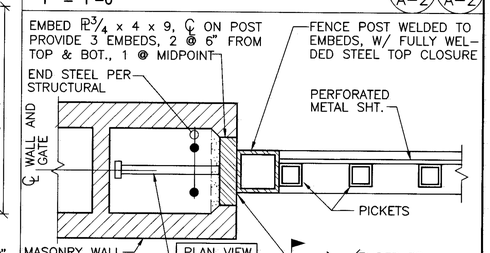

FENCE AT WALL — 27 / A-4

3" = 1'-0"

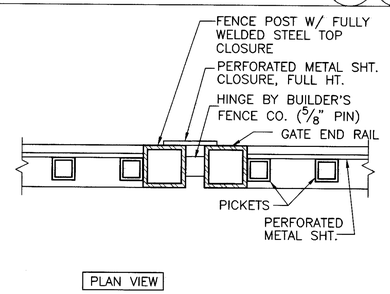

GATE AT FENCE POST — 28 / A-4

1" = 1'-0"

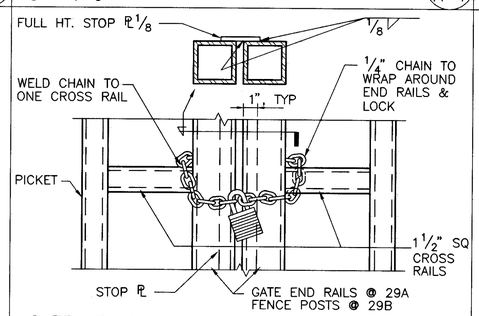

GATE LOCK — 29A / A-4, 29B / A-4

3" = 1'-0"

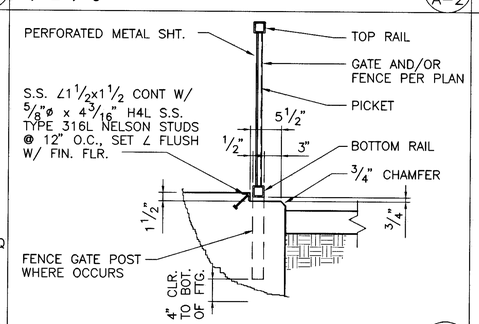

1" = 1'-0" — 30 / A-4

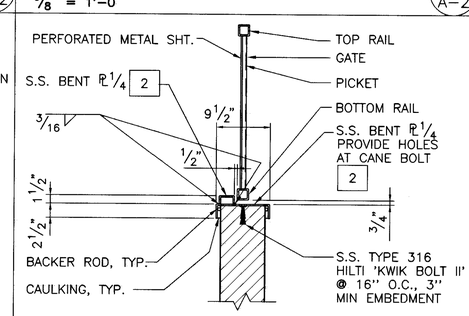

1" = 1'-0" — 31 / A-4

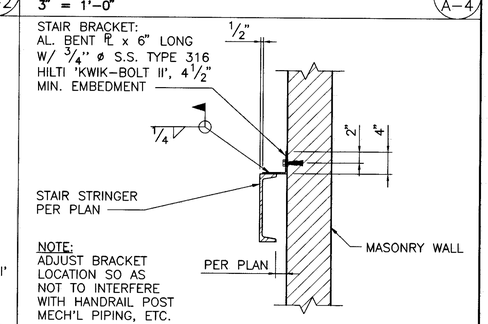

1" = 1'-0" — 32 / A-1

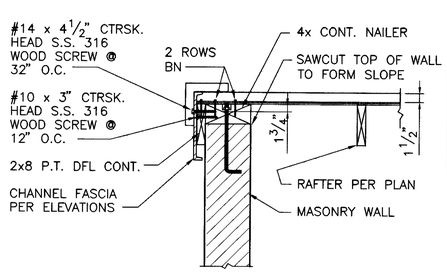

1" = 1'-0" — 33 / A-3

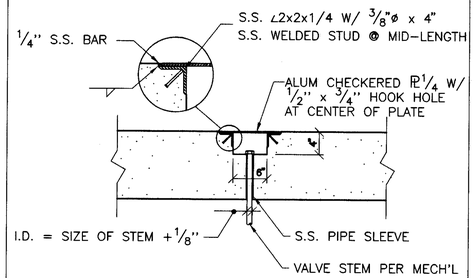

1" = 1'-0" — 34 / A-3

REGISTERED PROFESSIONAL ENGINEER — JOHN D. RUSH — No. 3714 — 6/30/98 — STRUCTURAL — STATE OF CALIFORNIA

REGISTERED PROFESSIONAL ENGINEER — ROBERT H. HENDERSHOT — No. 2437 — Exp. 6/30/97 — STRUCTURAL — STATE OF CALIFORNIA

R2H ENGINEERING, INC.
CONSULTING STRUCTURAL ENGINEERS
11545 W. BERNARDO CT., SUITE 300
SAN DIEGO, CALIFORNIA 92127
PHONE (619) 673-8416
FAX (619) 673-8418

DISTRICT APPROVED CHANGES

No.	Description	Approved	Date
1	AS- BUILT		

BENCH MARK

Description SEE TITLE SHEET
Location
Record From
Elevation Datum

A-9

CARLSBAD MUNICIPAL WATER DISTRICT

SHEET		
20	ENGINEERING DEPARTMENT	48 SHEETS

PLANS FOR THE IMPROVEMENT OF:
ARCHITECTURAL DETAILS
POINSETTIA SEWAGE LIFT STATION

District Engineer WILLIAM E. PLUMMER 28176 RCE — REGISTRATION EXPIRES 3-31-98 — Date 6-27-97

Drawn
Checked

CMWD 95-402

PD 411

331-1E
20 of 48
060700

C:\DWG\96035\96035A09 6-16-97 5:18:05 pm EST

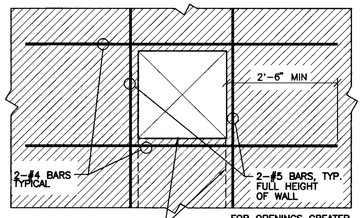

TYPICAL REINFORCEMENT AROUND MASONRY WALL OPENINGS (1)

NOTES:

1. WHERE PIPES ARE MORE THAN 4'-0" BELOW BOTTOM OF FOOTING , NO SPECIAL DETAILING IS REQ'D
2. PIPES SHALL NOT PASS UNDERNEATH GRADE BEAMS OR COLUMN FOOTINGS.
3. EMBED STEEL SLEEVE WITH 1" CLR ALL AROUND OR 1" FOAM RUBBER WRAP.
4. SEE CIVIL & MECH'L DWGS FOR LOCATION & SIZES OF PIPES
5. NO PIPES SHALL BE PLACED WITHIN THIS HEIGHT

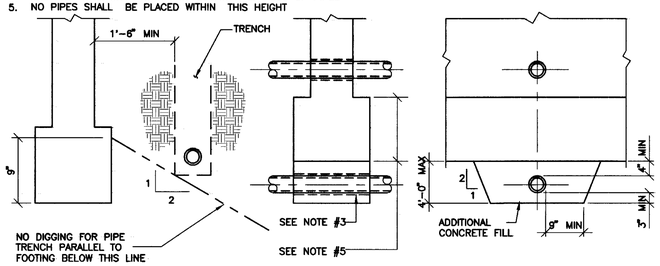

TYPICAL PIPING AT CONTINUOUS FOOTINGS (2)

NOTE:

BOND BEAM SHALL CONSIST OF OPEN END UNITS (EXCEPT AT PERSONNEL DOORS) AND SHALL BE SOLID GROUTED.

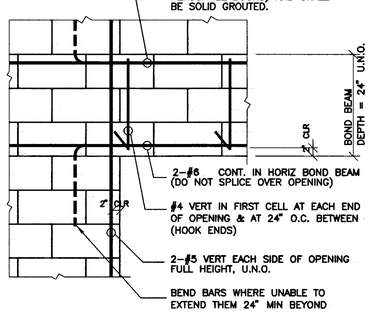

TYPICAL MASONRY LINTEL (3)

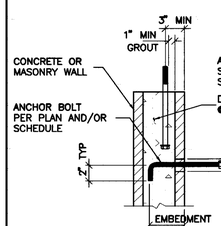

MINIMUM BOLT EMBEDMENT		WASHERS	
BOLT SIZE	EMBEDMENT	STEEL PLATE	MALLEABLE IRON
1/2" DIA.	4"	2 1/2"X 2 1/2"X 1/4"	2 1/2" DIA X 1/4"
5/8" DIA	4"	2 1/2"X 2 1/2"X 1/4"	2 3/4" DIA X 5/16"
3/4" DIA	5"	3 1/2"X 3 1/2"X 5/16"	3" DIA X 7/16"
7/8" DIA	6"	3 1/2"X 3 1/2"X 5/16"	3 1/2" DIA X 7/16"
1" DIA	7"	4"X 4"X 1/2"	4" DIA X 1/2"
1 1/8" DIA	8"	4"X 4"X 1/2"	4 1/2" DIA X 5/8"

BOLT / WASHER SCHEDULE (4)

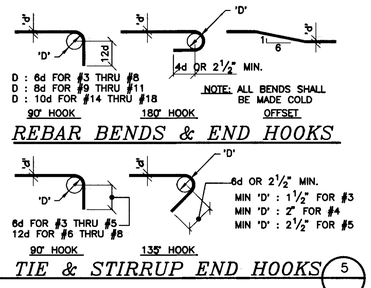

REBAR BENDS & END HOOKS

TIE & STIRRUP END HOOKS (5)

STRUCTURAL STEEL

1. MATERIAL AND WORKMANSHIP SHALL CONFORM TO A.I.S.C. SPECIFICATIONS FOR THE DESIGN, FABRICATION AND ERECTION OF STRUCTURAL STEEL FOR BUILDINGS, LATEST EDITION.
2. EXCEPT AS OTHERWISE SHOWN, THE DESIGN, FABRICATION, AND ERECTION OF STRUCTURAL ALUMINUM SHALL CONFORM TO THE REQUIREMENTS OF "THE ALUMINUM ASSOCIATION, INC.", ALUMINUM CONSTRUCTION MANUAL.
3. STRUCTURAL STEEL SHALL COMPLY WITH THE FOLLOWING A.S.T.M. DESIGNATION:
   - ALUMINUM (AL.) — ALLOY 6061 – T6
   - ROLLED STEEL SHAPES — A36, TYP U.N.O.
   - STAINLESS STEEL — TYPE 316, TYP THRU OUT
   - MISC. METALS — A36
4. PROVIDE FULL BEARING ON UNTHREADED PORTION OF SHANK FOR BOLTS AT ALL STEEL MEMBER CONNECTIONS. U.N.O.
5. WELDS SHALL BE MADE ONLY BY CERTIFIED WELDERS AS PRESCRIBED IN THE STANDARD CODE FOR WELDING IN BUILDING CONSTRUCTION OF THE AMERICAN WELDING SOCIETY.
6. WELDING ELECTRODES: E–70 XX SERIES. PER A.W.S. D1–1. U.N.O.
7. ALL FIELD WELDING AND HIGH STRENGTH BOLTING SHALL BE INSPECTED BY A DEPUTY REGISTERED INSPECTOR AS PRESCRIBED IN THE 1994 UBC SECTION 306(a) 5 AND 6.
8. SHOP WELDING MUST BE DONE BY A FABRICATOR APPROVED AND RECOGNIZED BY THE BUILDING OFFICIAL OR WELDING MUST HAVE CONTINUOUS SPECIAL INSPECTION. A RECOGNIZED TESTING LAB IS ONE SUPERVISED BY A STATE REGISTERED ENGINEER. A 'CERTIFICATE OF CONFORMANCE' IS TO BE SUBMITTED TO THE DEPARTMENT OF BUILDING INSPECTION AND THE ENGINEER FOR ALL SHOP WELDED WORK.
9. THE CONTRACTOR SHALL SUBMIT DETAILED SHOP DRAWINGS TO THE ENGINEER FOR REVIEW PRIOR TO FABRICATION. SHOP DRAWINGS SHALL BE SUBMITTED FOR ALL MEMBERS SHOWN ON DRAWINGS, INCLUDING SPECIAL FABRICATED STEEL WOOD–TO–WOOD CONNECTORS. REQUIRED SHOP DRAWINGS SHALL SHOW MEMBER LAYOUT, SIZE, LENGTH, BOLT HOLE SIZES AND LOCATIONS, CONNECTION DETAILS, GRADE, AND ERECTION PROCEDURES.
10. ALUMINUM IN CONTACT WITH CONCRETE OR GROUT SHALL BE PROTECTED WITH A HEAVY COAT OF BITUMINOUS.

ABBREVIATIONS

&	AND	JST	JOIST
@	AT	K	KIPS (1000 LB)
AB	ANCHOR BOLT	K.O.	KNOCK OUT
ARCH'L	ARCHITECTURAL	LB	POUND
BD	BOARD	LG	LONG
BLDG	BUILDING	L.L.	LIVE LOAD
BLK	BLOCK	L.L.H.	LONG LEG HORIZONTAL
BM	BEAM	L.L.V.	LONG LEG VERTICAL
BN	BOUNDARY NAIL	LT.WT.	LIGHT WEIGHT
BOT	BOTTOM	MAS	MASONRY
BRG	BEARING	MAX	MAXIMUM
BTWN	BETWEEN	M.B.	MACHINE BOLT
CB	CARRIAGE BOLT	MECH'L	MECHANICAL
C.I.P.	CAST IN PLACE	MEZZ	MEZZANINE
CJ	CONSTRUCTION JOINT	MIN	MINIMUM
CL	CENTERLINE	N.S.	NEAR SIDE
CLG	CEILING	N–S	NORTH–SOUTH
CLR	CLEAR	NOM	NOMINAL
CMU	CONCRETE MASONRY UNIT	N.T.S.	NOT TO SCALE
COL	COLUMN	O.C.	ON CENTER
CONN	CONNECTION	O.H.	OPPOSITE HAND
CONT	CONTINUOUS	OPNG	OPENING
CSK	COUNTER SINK	PC	PRECAST, PIECE
d	PENNY	PL	PLATE
DBL	DOUBLE	PLY	PLYWOOD
DFL	DOUGLAS FIR/LARCH	PREFAB	PREFABRICATED
DIA OR Ø	DIAMETER	PSF	POUNDS PER SQUARE FOOT
DIAG	DIAGONAL	PSI	POUNDS PER SQUARE INCH
DN	DOWN	P.T.	PRESSURE TREATED
DO	DITTO	R.D.	ROOF DRAIN
DWG	DRAWING	REF	REFERENCE
DWLS	DOWELS	REINF	REINFORCED, REINFORCING
EA	EACH	RF	ROOF
E.F.	EACH FACE	RFTR	RAFTER
EL	ELEVATION	R.S.	ROUGH SAWN
EN	EDGE NAIL	SCHED	SCHEDULE
EQ	EQUAL	SECT	SECTION
EQUIP	EQUIPMENT	SHT	SHEET
E.S.	EACH SIDE	SIM	SIMILAR
E.W.	EACH WAY	SQ	SQUARE
E–W	EAST–WEST	SS	STAINLESS STEEL
EXP	EXPANSION	STAGG	STAGGERED
EXT	EXTERIOR	STD	STANDARD
F.F.	FINISH FLOOR	STIFF	STIFFENER
F.S.	FAR SIDE	STL	STEEL
FIN	FINISH	STR	STRUCTURAL
FLR	FLOOR	SYM	SYMMETRICAL
FN	FIELD NAIL	T&B	TOP AND BOTTOM
FDN	FOUNDATION	T&G	TONGUE & GROOVE
F.O.C.	FACE OF CONCRETE	THK	THICKNESS
F.O.M.	FACE OF MASONRY	THRU	THROUGH
F.O.S.	FACE OF STUD	T.L.	TOTAL LOAD
FT	FEET	T.O.C.	TOP OF CONCRETE
FTG	FOOTING	T.O.G.	TOP OF GRATING
GA	GAUGE	T.O.M.	TOP OF MASONRY
GLB	GLUED LAMINATED BEAM	T.O.W.	TOP OF WALL
GRD	GRADE	TS	STRUCTURAL TUBE
GWB	GYPSUM WALLBOARD	T.S.G.	TAPERED STEEL GIRDER
HD	HOLD DOWN	TYP	TYPICAL
HDR	HEADER	U.N.O.	UNLESS NOTED OTHERWISE
HGR	HANGER	VERT	VERTICAL
HORIZ	HORIZONTAL	W/	WITH
H.S.B.	HIGH STRENGTH BOLT	W/O	WITHOUT
ICBO	INTERNATIONAL CONFERENCE OF BUILDING OFFICIALS		
IN	INCH	WD	WOOD
INFO	INFORMATION	W.P.	WATERPROOF
INT	INTERIOR	WT	WEIGHT
		W.W.F.	WELDED WIRE FABRIC
		WY	WAY

SPECIAL INSPECTIONS

1. PROVIDE SPECIAL INSPECTION IN ACCORDANCE WITH SECTION 1701 OF THE UNIFORM BUILDING CODE FOR THE ITEMS NOTED BELOW.
2. WHERE SPECIAL INSPECTION IS REQUIRED, IT SHALL BE PERFORMED BY A REGISTERED DEPUTY INSPECTOR EMPLOYED BY THE OWNER AND APPROVED BY THE GOVERNING JURISDICTION AND ENGINEER. COPIES OF INSPECTION REPORTS SHALL BE SUBMITTED TO THE BUILDING DEPARTMENT AND STRUCTURAL ENGINEER OF RECORD. EACH REPORT SHALL BE SIGNED BY A LICENSED ENGINEER OR ARCHITECT. THE STRUCTURAL ENGINEER OF RECORD SHALL BE NOTIFIED IMMEDIATELY OF ANY TEST WHICH INDICATES NON–COMPLIANCE WITH APPLICABLE CODES OR REQUIREMENTS OF THESE PLANS.
3. SPECIAL INSPECTIONS:
   - [X] CONCRETE PLACEMENT*
   - [X] CONCRETE STRENGTH*
   - [X] EMBEDMENTS IN CONCRETE*
   - [X] EMBEDMENTS IN MASONRY
   - [X] BOLTS IN CONCRETE*
   - [X] BOLTS IN MASONRY
   - [X] REINFORCING STEEL PLACEMENT IN CONCRETE*
   - [X] REINFORCING STEEL PLACEMENT IN MASONRY
   - [X] MASONRY CONSTRUCTION**
   - [X] DRILLED IN ANCHORS
   - [ ] PILES/CAISSONS

* FOR CONCRETE OVER 2,500 psi

** PRISM TESTS SHALL BE PERFORMED IN ACCORDANCE WITH SECTION 2105.

LUMBER

1. ALL WOOD MEMBERS SHALL BE DOUGLAS FIR/LARCH, CONFORMING TO THE 1991 WESTERN WOOD PRODUCTS ASSOCIATION GRADING RULES, OR AS CALLED FOR ON DRAWINGS. U.N.O., EACH PIECE OF LUMBER SHALL BE GRADE MARKED AS FOLLOWS:

BEAMS, STRINGERS, & POSTS (4" & LARGER IN WIDTH)	#1
JOISTS, RAFTERS, & HEADERS	#2
STUDS, PLATES AND BLOCKING	STANDARD & BETTER

MAXIMUM MOISTURE CONTENT OF WOOD MEMBERS TO BE 19% WHEN INSTALLED. ALL PLATES AND SILLS BEARING ON CONCRETE SHALL BE PRESSURE TREATED DOUGLAS FIR, (P.T.D.F.)

2. PLACE DOUBLE JOISTS UNDER ALL PARALLEL PARTITIONS UNLESS DIRECTLY SUPPORTED BELOW. PLACE 2X DFL SOLID BLOCKING BETWEEN JOISTS UNDER ALL PARTITIONS.
3. PROVIDE 2X DFL SOLID BLOCKING, 1X3 CROSS BRIDGING OR METAL CROSS BRIDGING AS FOLLOWS:
   - A. AT JOISTS OVER 10" IN DEPTH AND SPANNING OVER 8'–0", SPACE AT 8'–0" O.C. OR AT MIDSPAN WHICHEVER IS LESS.
   - B. 2" SOLID BLOCK SHALL BE PLACED BETWEEN ALL JOIST AND RAFTER AT SUPPORTS.
4. PROVIDE A 2X BLOCK AT MID HEIGHT OF STUD WALLS OVER 10' IN HEIGHT.
5. U.N.O., TOP PLATES OF ALL WOOD STUD WALLS SHALL BE 2–2X (SAME WIDTH AS STUDS), LAP 48" (MIN.) WITH 12–16d NAILS AT EACH LAP.
6. NAILING SHALL BE WITH COMMON WIRE NAILS UNLESS SPECIFICALLY NOTED OTHERWISE AND SHALL CONFORM TO THE NAILING SCHEDULE ON THESE DRAWINGS.
7. WHERE STUD PARTITIONS JOIN CONCRETE OR MASONRY WALLS THE END STUD SHALL BE ANCHORED WITH 1/2" DIA. ANCHOR BOLTS, 12" FROM THE TOP AND BOTTOM, AN AT 48" O.C. ALONG STUD WITH A MINIMUM OF 2 (TWO) BOLTS PER PIECE.
8. BOLTS IN WOOD SHALL BE NOT LESS THAN 7 DIA. FROM THE END AND 4 DIA. FROM THE EDGE UNLESS NOTED OTHERWISE.
9. BOLT HOLES IN WOOD SHALL BE 1/32" LARGER THAN THE BOLT DIAMETER. THE THREADED PORTION OF THE BOLT IN BEARING SHALL BE KEPT TO A PRACTICAL MINIMUM.
10. ALL BOLTS AND NUTS SHALL BE FITTED WITH CUT STEEL WASHERS.
11. LAG SCREWS: PRE DRILL WITH A BIT SIZE 60% TO 75% OF THE SHANK DIAMETER FOR THE THREADED PORTION. LEAD HOLE TO BE THE SAME LENGTH AS THE UNTHREADED SHANK AND THE SAME DIAMETER AS THE SHANK. SCREW ALL LAGS INTO PLACE. CUT WASHERS SHALL BE PROVIDED UNDER HEADS WHICH BEAR ON WOOD. SOAP OR OTHER LUBRICANT SHALL BE USED ON THE SCREWS OR IN THE LEAD HOLE, TO FACILITATE INSERTION AND PREVENT DAMAGE TO THE SCREW.
12. CUTTING, NOTCHING, OR DRILLING OF BEAMS OR JOISTS SHALL BE PERMITTED ONLY AS DETAILED OR APPROVED BY THE ENGINEER AND PER SEC. 2517 (D) 3 OF THE U.B.C.
13. FRAMING CONNECTORS: SIMPSON STRONG–TIE OR EQUIVALENT APPROVED BY THE ENGINEER. ALL FRAMING CONNECTORS SHALL BE I.C.B.O. APPROVED AND INSTALLED PER MANUFACTURER RECOMMENDATION.
14. ALL STRUCTURAL PLYWOOD SHALL BE C–D APA INTERIOR GRADE WITH EXTERIOR GLUE AND CONFORM TO PRODUCT STANDARD PS–1–(LATEST EDITION), UNLESS NOTED OTHERWISE.
15. ALL SUSPENDED CEILINGS, PLUMBING AND SPRINKLERS SHALL BE SUSPENDED DIRECTLY FROM PURLINS OR GLU LAM BEAMS.

REINFORCING STEEL

1. REINFORCING STEEL: ASTM A–615 GRADE 60
   ALL WELDED REINFORCING BARS SHALL BE ASTM A–706.
2. WELDED WIRE FABRIC: ASTM A–185.
3. MINIMUM PROTECTIVE COVER FOR REINFORCING STEEL: U.N.O.
   - A. ON EARTH SIDE WHEN PLACED AGAINST EARTH — 3" CLR.
   - B. ON EARTH SIDE WHEN FORMED — 2" CLR.
   - C. EXPOSED SIDE OF EXTERIOR WALL ABOVE GRADE — 1–1/2" CLR.
   - D. OTHER WALLS AND SUPPORTED SLAB — 3/4" CLR.
   - E. TIED COLUMNS (STIRRUPS) ABOVE GRADE — 1–1/2" CLR.
   - F. BEAMS (STIRRUPS) ABOVE GRADE — 1–1/2" CLR.
   - G. STEEL IN SLAB ON GRADE — CENTER LINE OF SLAB, U.N.O.
4. BAR SPLICE LAPS SHALL BE AS FOLLOWS U.N.O.:
   - A. MASONRY: GRADE 60 — LAP 48 DIA. (20" MIN)
     GRADE 40 — LAP 40 DIA. (20" MIN)
   - B. CONCRETE: #3 THROUGH #6 — LAP 30 DIA. (12" MIN)
     #7 AND LARGER — LAP PER SCHEDULE BELOW

BAR SPLICE LAP LENGTHS IN CONCRETE

	BAR SIZE				
F'c (psi)	#7	#8	#9	#10	#11
2,000	33"	43"	54"	69"	84"
3,000	27"	35"	44"	56"	69"
4,000	23"	30"	38"	49"	60"
5,000	21"	27"	34"	44"	53"

FOR WELDED WIRE FABRIC: SPACING OF WIRE PLUS 2".

5. REINFORCING DETAILING, BENDING AND PLACING SHALL BE IN ACCORDANCE WITH THE CONCRETE REINFORCING STEEL INSTITUTE "MANUAL OF STANDARD PRACTICE" LATEST EDITION AND ACI 315.
6. ALL REINFORCING STEEL, WELDED WIRE FABRIC, ANCHOR BOLTS, HOLD DOWN ANCHORS, DOWELS, AND INSERTS SHALL BE WELL SECURED IN POSITION PRIOR TO AND WHILE PLACING CONCRETE OR GROUT.
7. VERTICAL REINFORCEMENT FOR CAST IN PLACE WALLS AND COLUMNS SHALL BE DOWELED TO THE SUPPORTING MEMBERS WITH THE SAME SIZE AND SPACING OF REINFORCEMENT AS CALLED FOR IN THE DRAWINGS OR GENERAL NOTES.
8. SPACER TIES: FURNISH #3 TIES AT 72" IN ALL BEAMS AND REINFORCED FOOTINGS, UNLESS NOTED OR SHOWN OTHERWISE.

GENERAL REQUIREMENTS

1. THE CONTRACTOR SHALL VERIFY ALL DIMENSIONS, ELEVATIONS, AND SITE CONDITIONS BEFORE STARTING WORK AND SHALL NOTIFY THE ARCHITECT/ENGINEER IMMEDIATELY OF ANY DISCREPANCIES. ANY OMISSION OR CONFLICT BETWEEN THE VARIOUS ELEMENTS OF THE WORKING DRAWINGS AND/OR SPECIFICATIONS SHALL BE BROUGHT TO THE ATTENTION OF THE ARCHITECT/ENGINEER BEFORE PROCEEDING WITH ANY WORK SO AFFECTED.
2. NOTES AND DETAILS ON THE DRAWINGS SHALL TAKE PRECEDENCE OVER GENERAL NOTES AND TYPICAL DETAILS ON THIS SHEET IN CASE OF CONFLICT.
3. ALL CONSTRUCTION AND QUALITY OF MATERIALS SHALL CONFORM TO THE REQUIREMENTS OF THE LATEST EDITION OF THE UNIFORM BUILDING CODE, AS ADOPTED BY THE LOCAL GOVERNING AUTHORITIES.
4. WHERE CONSTRUCTION DETAILS ARE NOT SHOWN OR NOTED FOR ANY PART OF THE WORK, SUCH DETAILS SHALL BE THE SAME AS FOR SIMILAR WORK SHOWN ON THE DRAWINGS. WHERE SUFFICIENTLY SIMILAR WORK IS NOT SHOWN, THE ARCHITECT/ENGINEER SHALL BE CONSULTED FOR CLARIFICATION.
5. THE CONTRACTOR SHALL TAKE ALL NECESSARY PRECAUTIONS TO LOCATE AND PROTECT ANY UNDERGROUND OR CONCEALED CONDUIT, PLUMBING OR OTHER UTILITIES WHERE NEW WORK IS BEING PERFORMED, PRIOR TO BEGINNING EXCAVATIONS.
6. PIPES, DUCTS, SLEEVES, CHASES, ETC., SHALL NOT BE PLACED IN SLABS, BEAMS, OR WALLS UNLESS SPECIFICALLY SHOWN OR NOTED NOR SHALL ANY STRUCTURAL MEMBER BE CUT FOR PIPES, DUCTS, ETC., UNLESS OTHERWISE NOTED. THE CONTRACTOR SHALL OBTAIN PRIOR APPROVAL FOR INSTALLATION OF ANY ADDITIONAL PIPES, DUCTS, ETC.
7. FOR ALL MECHANICAL AND ELECTRICAL EQUIPMENT IN EXCESS OF 250 LBS, THE CONTRACTOR SHALL COORDINATE EXACT WEIGHTS AND LOCATIONS WITH STRUCTURAL SUPPORTS. IN THE EVENT THAT THE EQUIPMENT DEVIATES IN WEIGHT OR LOCATIONS FROM THOSE INDICATED ON THE STRUCTURAL PLANS, THE ENGINEER MUST BE NOTIFIED AND APPROVAL OBTAINED PRIOR TO INSTALLATION.
8. THIS STRUCTURE IS DESIGNED AS A STABLE UNIT AFTER ALL COMPONENTS ARE IN PLACE. THE CONTRACTOR SHALL BE RESPONSIBLE TO PROVIDE TEMPORARY BRACING AS REQUIRED TO INSURE THE VERTICAL AND LATERAL STABILITY OF THE ENTIRE STRUCTURE OR ANY PORTION THEREOF DURING CONSTRUCTION.
9. NEITHER THE OWNER NOR THE ARCHITECT/ENGINEER WILL ENFORCE SAFETY MEASURES OR REGULATIONS. THE CONTRACTOR SHALL DESIGN, CONSTRUCT AND MAINTAIN ALL SAFETY DEVICES, INCLUDING SHORING AND BRACING, AND SHALL BE SOLELY RESPONSIBLE FOR CONFORMING TO ALL LOCAL, STATE AND FEDERAL SAFETY AND HEALTH STANDARDS, LAWS AND REGULATIONS.
10. ANY OPTIONS OR APPROVED SUBSTITUTIONS ARE FOR THE CONTRACTOR'S CONVENIENCE. THE CONTRACTOR SHALL BE RESPONSIBLE FOR ALL CHANGES, ADDITIONAL COSTS AND COORDINATION WITH ALL ITEMS THAT THE SUBSTITUTIONS MAY AFFECT.
11. A CALIFORNIA REGISTERED CIVIL ENGINEER SHALL DESIGN AND BE RESPONSIBLE FOR ANY SUPPLEMENTAL FABRICATION DESIGNS OF BUILDING COMPONENTS. IT SHALL BE THE RESPONSIBILITY OF THE COMPONENT FABRICATOR TO COMPLY WITH ALL APPLICABLE REGULATIONS AND TO OBTAIN APPROVAL FROM NECESSARY GOVERNING AGENCIES ON SUCH DESIGNS. PRIOR TO CONSTRUCTION AND/OR FABRICATION OF THE ALTERNATE COMPONENTS, THE DESIGN SHALL BE REVIEWED BY THE STRUCTURAL ENGINEER OF RECORD FOR CONFORMANCE WITH THE STRUCTURAL DESIGN AS APPROVED FOR BUILDING PERMIT.

MASONRY

1. CONCRETE MASONRY: ASTM C–90–88, GRADE N–1 HOLLOW LOAD BEARING UNITS, MEDIUM WEIGHT RUNNING BOND GROUTED WALL CONSTRUCTION CONFORMING TO THE REQUIREMENTS OF THE QUALITY CONTROL STANDARDS OF THE CONCRETE MASONRY ASSOCIATION. CLAY MASONRY: HOLLOW JUMBO BRICK UNITS 1500 PSI MINIMUM, RUNNING BOND GROUTED WALL CONSTRUCTION.
2. VERTICAL REINFORCEMENT: SEE PLANS FOR TYPICAL SIZE AND SPACING. PROVIDE 2 – #5 FULL HEIGHT AT THE SIDES OF WALL OPENINGS, CORNERS, INTERSECTIONS, CONTROL JOINTS AND WALL ENDS. ALL STEEL SHALL BE CENTERED ON THE WALL UNLESS SPECIFICALLY DETAILED OTHERWISE. REINFORCEMENT SHALL BE DOWELED TO THE SUPPORTING MEMBERS WITH THE SAME SIZE AND SPACING REINFORCEMENT AS CALLED FOR IN THE DRAWINGS OR THE STANDARD NOTES.
3. HORIZONTAL REINFORCEMENT: SEE PLANS AND DETAILS FOR TYPICAL SIZES AND SPACING. PROVIDE 2– #5 CONT IN BOND BEAM AT FLOOR LINE, ROOF LINES, AND TOPS OF PARAPETS. SEE DETAILS THIS SHEET FOR REINFORCING AT WALL OPENINGS.
4. SOLID GROUT ALL MASONRY CELLS.
5. MORTAR: TYPE S, COMPRESSIVE STRENGTH 1,800 psi AT 28 DAYS. PROPORTIONS BY VOLUME; 1 PART PORTLAND CEMENT, 1/4 PART MINIMUM TO 1/2 PART MAXIMUM HYDRATED LIME OR LIME PUTTY WITH THE FOLLOWING DAMP LOOSE AGGREGATE: NOT LESS THAN 2–1/4 AND NOT MORE THAN 3 TIMES THE SUM OF THE VOLUMES OF THE CEMENT AND LIME USED. MORTAR JOINTS SHALL BE LIGHTLY COMPRESSED.
6. GROUT: COMPRESSIVE STRENGTH 2,000 psi AT 28 DAYS. PROPORTIONS BY VOLUME; ONE PART PORTLAND CEMENT TO WHICH MAY BE ADDED NOT MORE THAN ONE–TENTH PART HYDRATED LIME OR LIME PUTTY, AND TWO TO THREE PARTS SAND, AND NOT MORE THAN TWO PARTS GRAVEL.
7. GROUT SHALL TYPICALLY BE POURED IN LIFTS OF 4 FOOT. ALL GROUT SHALL BE CONSOLIDATED AT TIME OF POURING BY MECHANICAL VIBRATION AND THEN RECONSOLIDATED BY AGAIN VIBRATING BEFORE PLASTICITY IS LOST. AT GROUT LIFTS IN EXCESS OF 4'–0", PROVIDE INSPECTION AND CLEAN OUT HOLES AT BASE. LIFTS SHALL NOT EXCEED 8'–0".
8. ALL MASONRY RETAINING EARTH OR MASONRY BELOW GRADE SHALL HAVE ALL CELLS FILLED WITH GROUT.
9. WHEN GROUTING IS STOPPED FOR ONE HOUR OR LONGER HORIZONTAL CONSTRUCTION JOINTS SHALL BE FORMED BY STOPPING THE GROUT POUR 1–1/2" BELOW TOP OF THE UPPERMOST UNIT.

GLU LAMINATED BEAMS

1. FABRICATION OF GLU–LAM BEAMS SHALL BE IN ACCORDANCE WITH U.S. PRODUCT STANDARD PS56–73, AITC 117–84.
2. EACH MEMBER SHALL BE STAMPED WITH AN IDENTIFYING NUMBER AND SHALL BE ACCOMPANIED BY A CERTIFICATE OF COMPLIANCE CERTIFYING THAT THE MEMBER MEETS ALL REQUIREMENTS OF THE UNIFORM BUILDING CODE LATEST EDITION. SUCH CERTIFICATE MUST BE MADE BY AN APPROVED AGENCY AND SHALL BE SUBMITTED TO BUILDING OFFICIALS AND THE ENGINEER PRIOR TO ERECTION.
3. GLU–LAM BEAMS SHALL BE INDUSTRIAL APPEARANCE GRADE, USING EXTERIOR GLUE, COMBINATION SYMBOL 24F–V4 FOR SIMPLE SPANS AND 24F–V8 FOR SPANS CONTINUOUS OVER ANY SUPPORT.
4. ADHESIVES: USE – WET (WATERPROOF).
5. THE CONTRACTOR SHALL SUBMIT DETAILED SHOP DRAWINGS TO THE ENGINEER FOR REVIEW PRIOR TO FABRICATION FOR ALL GLU LAMS SHOWN ON THE DRAWINGS. SHOP DRAWINGS SHALL SHOW LENGTH, CAMBER, DEPTH, THICKNESS OF LAMINATIONS, GRADE STRESSES, AND LOCATIONS.

FOUNDATION

1. SOILS TYPE: SEE SOILS REPORT #04787–12–06 PREPARED BY GEOCON INCORPORATED, DATED APRIL 5, 1993. THE SOILS REPORT IS TO BE CONSIDERED A PART OF THESE PLANS AND SHALL BE COMPLIED WITH BY THE CONTRACTOR.
2. CONTINOUS STRIP FOOTING DESIGN IS BASED ON A SOIL BEARING VALUE OF 2000 psf WITH THE BOTTOM OF FOOTINGS TO BE PLACED AT 24" MINIMUM BELOW THE LOWEST ADJACENT GRADE. MAT FOUNDATION DESIGN IS BASED ON AN ALLOWABLE SOIL BEARING PRESSURE OF 3000 psf.
3. IN THE EVENT FOUNDATION EXCAVATIONS ARE CARRIED TO A DEPTH GREATER THAN REQUIRED, THE ADDITIONAL DEPTH SHALL BE FILLED WITH THE SAME CONCRETE AS THAT USED FOR FOOTING AT NO ADDITIONAL EXPENSE TO THE OWNER. THE ADDITIONAL CONCRETE SHALL BE PLACED AT THE BOTTOM OF THE FOOTING EXCAVATION WITH THE REINFORCING REMAINING LOCATED AS SHOWN FOR THE ORIGINAL FOOTING DEPTH. NO UNCONTROLLED FILL WILL BE PERMITTED.
4. THE FOOTING EXCAVATIONS SHALL BE KEPT FREE FROM LOOSE MATERIAL AND STANDING WATER.
5. FOR RETAINING WALLS WHICH WILL HAVE PERMANENT STRUCTURAL SUPPORT AT TOP, PROVIDE SHORING PRIOR TO BACKFILLING, UNLESS OTHERWISE NOTED. SHORING SHALL REMAIN IN PLACE UNTIL PERMANENT STRUCTURAL SUPPORTING MEMBERS ARE IN PLACE AND HAVE DEVELOPED SPECIFIED STRENGTHS.
6. BACKFILL FOR ALL RETAINING WALLS SHALL BE PERVIOUS MATERIAL. BACKFILLING SHALL NOT TO BEGIN UNTIL MASONRY OR CONCRETE RETAINING MEMBERS HAVE ATTAINED SPECIFIED DESIGN STRENGTH. BACKFILL SHALL CONFORM TO THE SOILS REPORT.
7. ALL REQUIRED BACKFILL SHALL BE COMPACTED TO AT LEAST (90%) OF THE MAXIMUM DENSITY OBTAINABLE BY THE A.S.T.M. DESIGNATION D–1557 (LATEST EDITION) METHOD OF COMPACTION.
8. A COMPACTION REPORT MUST BE SUBMITTED TO AND APPROVED BY THE GOVERNING JURISDICTION PRIOR TO PLACEMENT OF ANY CONCRETE ON FILL.
9. ALL UTILITY TRENCHES SHALL BE COMPACTED TO A MINIMUM OF 90% RELATIVE DENSITY.
10. FINISH GRADES SHALL BE SLOPED TO DRAIN SURFACE WATER AWAY FROM THE BUILDING.
11. SEE SOILS REPORT FOR BUILDING PAD PREPARATION.
12. PRIOR TO THE CONTRACTOR REQUESTING A BUILDING DEPARTMENT FOUNDATION INSPECTION, THE SOILS ENGINEER SHALL ADVISE THE BUILDING OFFICIAL, IN WRITING, THAT:
    - A. THE BUILDING PAD WAS PREPARED IN ACCORDANCE WITH THE SOILS REPORT,
    - B. THE UTILITY TRENCHES HAVE BEEN PROPERLY BACKFILLED AND COMPACTED, AND
    - C. THE FOUNDATION EXCAVATIONS COMPLY WITH THE INTENT OF THE SOILS REPORT.
13. ALL HOLDOWN ANCHORS SHALL BE SECURELY TIED IN PLACE PRIOR TO THE CONTRACTOR REQUESTING A FOUNDATION INSPECTION.

REINFORCED CONCRETE

1. CONCRETE STRENGTHS: UNLESS NOTED OTHERWISE, THE SPECIFIED CONCRETE STRENGTH SHOWN IN THE FOLLOWING TABLE IS THE MINIMUM COMPRESSIVE STRENGTH AT 28 DAYS, THE AGGREGATE SHOWN IS THE MAXIMUM SIZE, AND THE SLUMP SHOWN IS THE MAXIMUM IN INCHES. (REGULAR WEIGHT= 145 pcf)

CONSTRUCTION	STRENGTH (psi)	AGGREGATE (inches)	SLUMP (inches)
FOOTINGS	4,000	1–1/2	3
SLAB ON GRADE	4,000	1–1/2	3
SLABS	4,000	1–1/2	3
WALLS	4,000	1–1/2	4
FOR CONCRETE NOT SPECIFIED	3,000	1–1/2	4

2. DRYPACK SHALL BE COMPOSED OF ONE PART PORTLAND CEMENT TO NOT MORE THAN 3 PARTS SAND.
3. PORTLAND CEMENT SHALL CONFORM TO A.S.T.M. C 150–81 TYPE I OR II. STRUCTURAL CONCRETE AGGREGATE SHALL CONFORM TO ASTM C 33–81, STANDARD WEIGHT OR C330–80, LIGHTWEIGHT.
4. CONTINUOUS INSPECTION BY A REGISTERED DEPUTY INSPECTOR IS REQUIRED FOR ALL STRUCTURAL CONCRETE WITH A DESIGN STRENGTH IN EXCESS OF 2,500 psi UNLESS NOTED OTHERWISE.
5. ADMIXTURES MAY BE USED WITH PRIOR APPROVAL OF THE ENGINEER. ADMIXTURES USED TO INCREASE THE WORKABILITY OF THE CONCRETE SHALL NOT BE CONSIDERED TO REDUCE THE SPECIFIED MIN. CEMENT CONTENT. (CALCIUM CHLORID

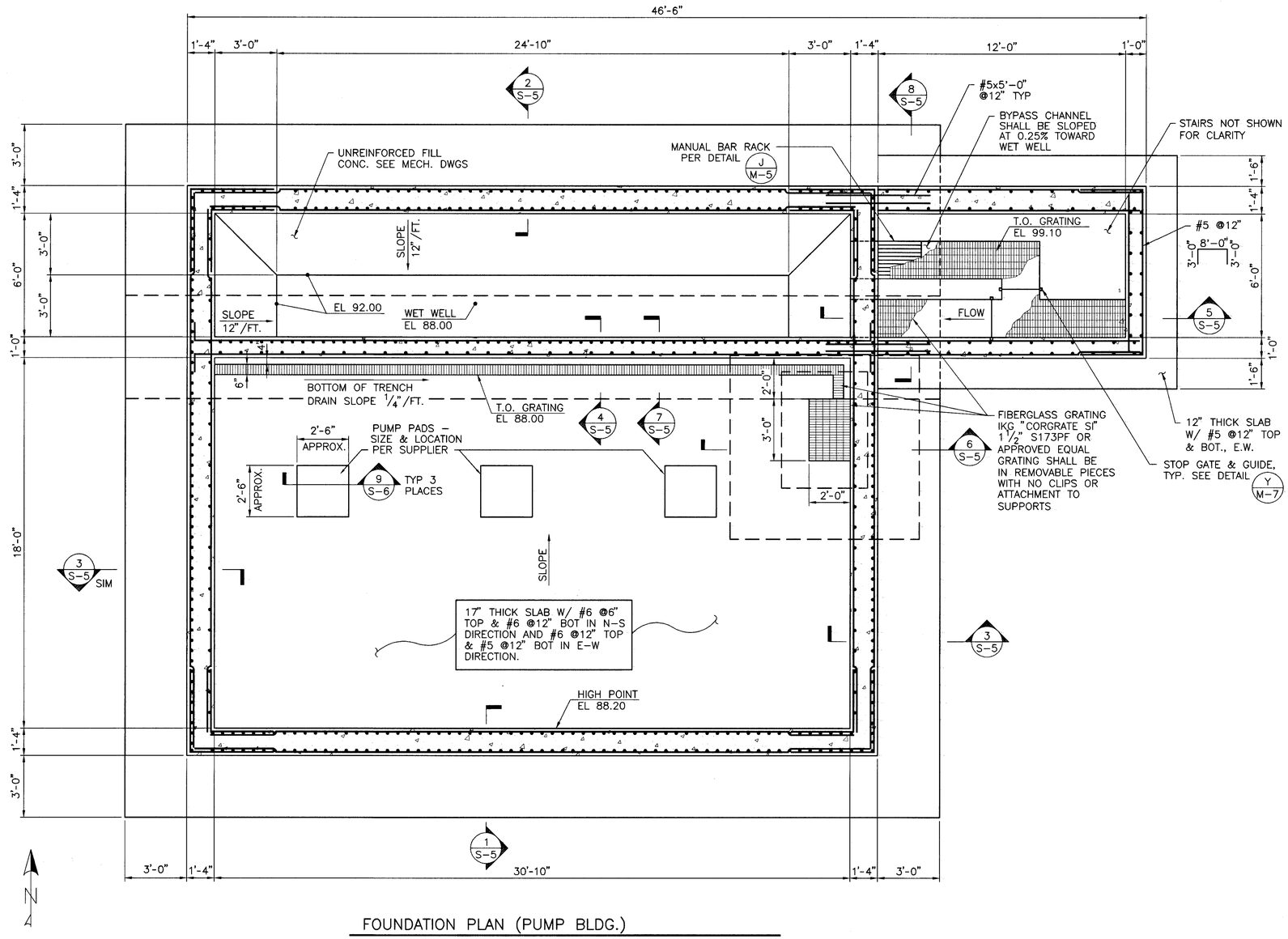

FOUNDATION PLAN (PUMP BLDG.)

3/8" = 1'-0"

S-2

CARLSBAD MUNICIPAL WATER DISTRICT

SHEET 22	ENGINEERING DEPARTMENT	48 SHEETS

PLANS FOR THE IMPROVEMENT OF:

FOUNDATION PLAN
PUMP BUILDING
POINSETTIA SEWAGE LIFT STATION

District Engineer WILLIAM E. PLUMMER 28176 RCE 6-23-97 Date
REGISTRATION EXPIRES 3-31-98

Drawn DN
Checked DWS

CMWD 95-402

REGISTERED PROFESSIONAL ENGINEER CRAIG D. RUSSI No. 3714 Exp. 3/31/98 STRUCTURAL STATE OF CALIFORNIA

REGISTERED PROFESSIONAL ENGINEER ROBERT H. HENDERSOT No. 2437 Exp. 6/30/97 STRUCTURAL STATE OF CALIFORNIA

R2H ENGINEERING, INC.
CONSULTING STRUCTURAL ENGINEERS
11545 W. BERNARDO CT., SUITE 300
SAN DIEGO, CALIFORNIA 92127
PHONE (619) 673-8416
FAX (619) 673-8418

DISTRICT APPROVED CHANGES

No.	Description	Approved	Date
1	AS-BUILT		

BENCH MARK

Description SEE TITLE SHEET
Location
Record From
Elevation Datum

331-1E
22 of 48
020200

PD 411

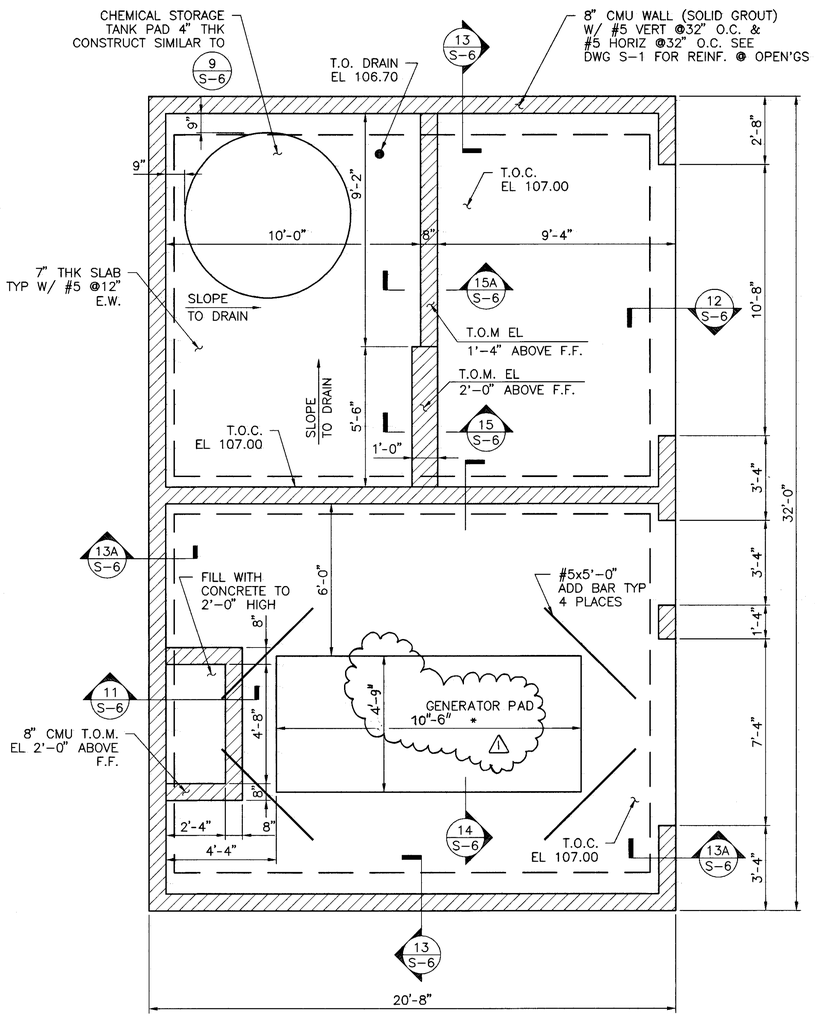

* GENERATOR PAD DIMENSIONS PER MANUFACTURER

FOUNDATION PLAN (GENERATOR BLDG.)

SCALE: 3/8" = 1'-0"

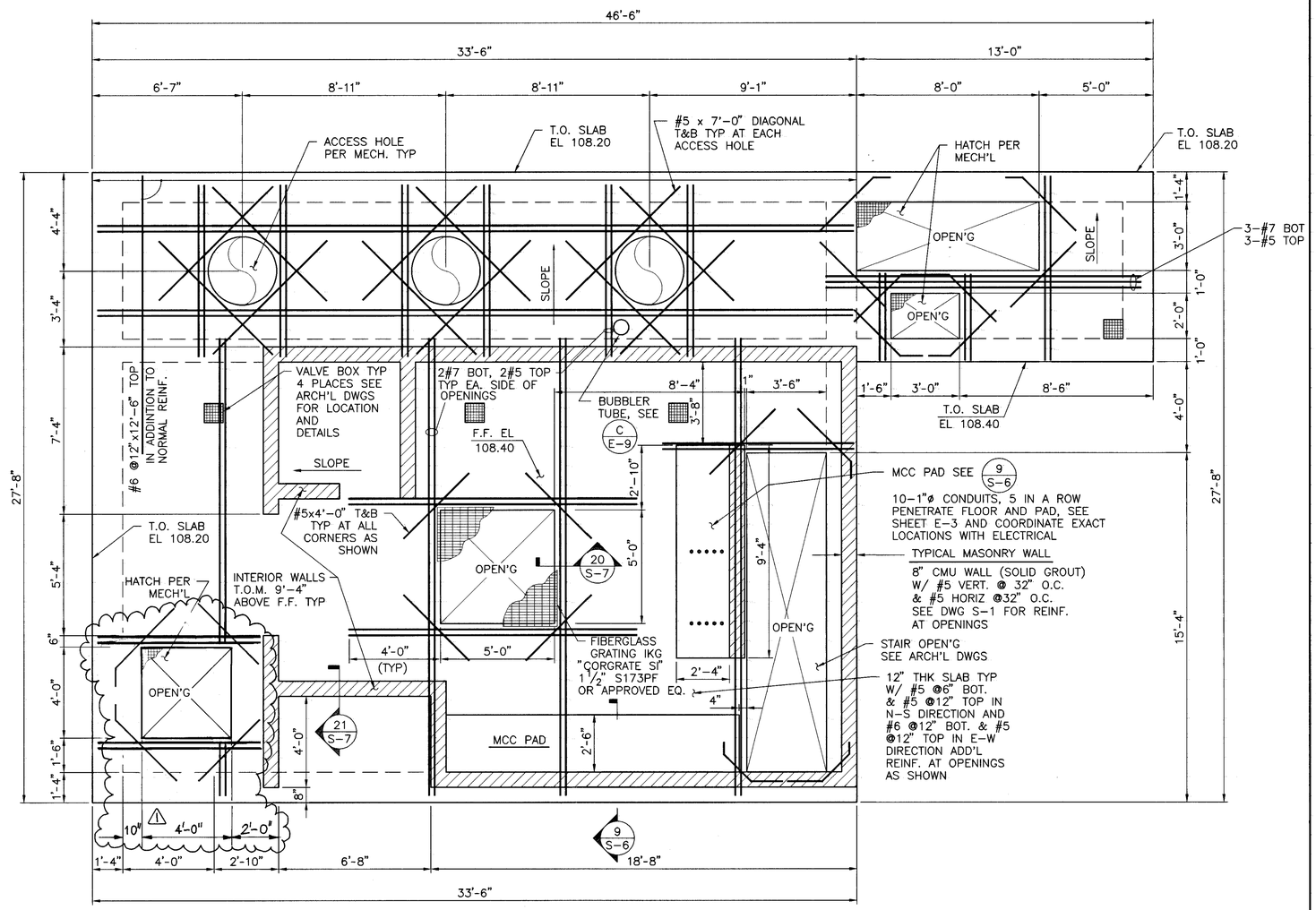

UPPER FLOOR PLAN (PUMP BLDG.)

SCALE: 3/8" = 1'-0"

S-3

CARLSBAD MUNICIPAL WATER DISTRICT		
SHEET 23	ENGINEERING DEPARTMENT	48 SHEETS

PLANS FOR THE IMPROVEMENT OF:

FOUNDATION PLAN & UPPER FLOOR PLAN

POINSETTIA SEWAGE LIFT STATION

William E. Plummer 28176 RCE 6-23-97 Date

District Engineer WILLIAM E. PLUMMER

REGISTRATION EXPIRES 3-31-98

Drawn DN

Checked DWS

CMWD 95-402

REGISTERED PROFESSIONAL ENGINEER DAVID D. RUSH No. 3714 Exp. 3/31/98 STRUCTURAL STATE OF CALIFORNIA

REGISTERED PROFESSIONAL ENGINEER ROBERT H. HENDERSHOT No. 2437 Exp. 6/30/97 STRUCTURAL STATE OF CALIFORNIA

R2H ENGINEERING, INC.
CONSULTING STRUCTURAL ENGINEERS
11545 W. BERNARDO CT., SUITE 300
SAN DIEGO, CALIFORNIA 92127
PHONE (619) 673-8416
FAX (619) 673-8418

DISTRICT APPROVED CHANGES

No.	Description	Approved	Date
1	AS-BUILT		

BENCH MARK

Description SEE TITLE SHEET

Location

Record From

Elevation Datum

331-1E

23 of 48

062100

PD 411

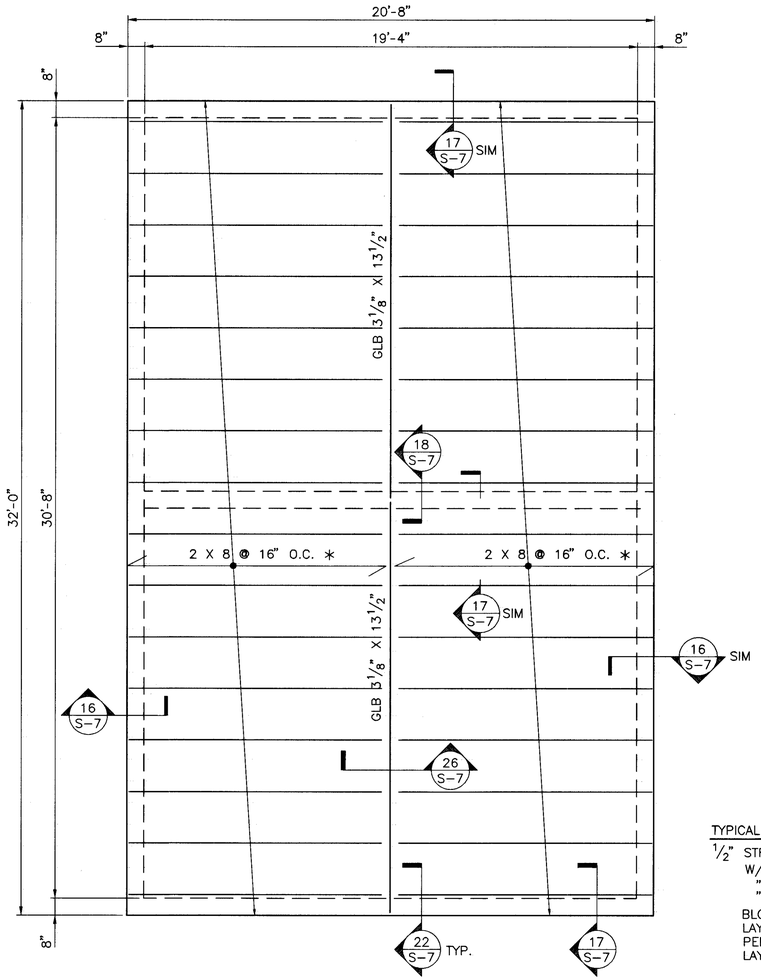

TYPICAL ROOF DIAPHRAGM:

1/2" STRUCT I (5 PLY) A.P.A. RATED SHEATHING (32/16)
W/10d @ 4" O.C. B.N.
" @ 6" O.C. E.N.
" @ 12" O.C. F.N.
BLOCK ALL EDGES
LAY PLY. WD. SHEATHING FACE GRAIN PERPENDICULAR TO JOIST & STAGGER LAYOUT 24" MIN.

ROOF FRAMING PLAN (GENERATOR BLDG.)

SCALE: 3/8" = 1'-0"

* USE DOUBLE JOIST AT ALL PIPE SUPPORT LOCATIONS, SEE 25/S-7 AND MECH'L DWGS.

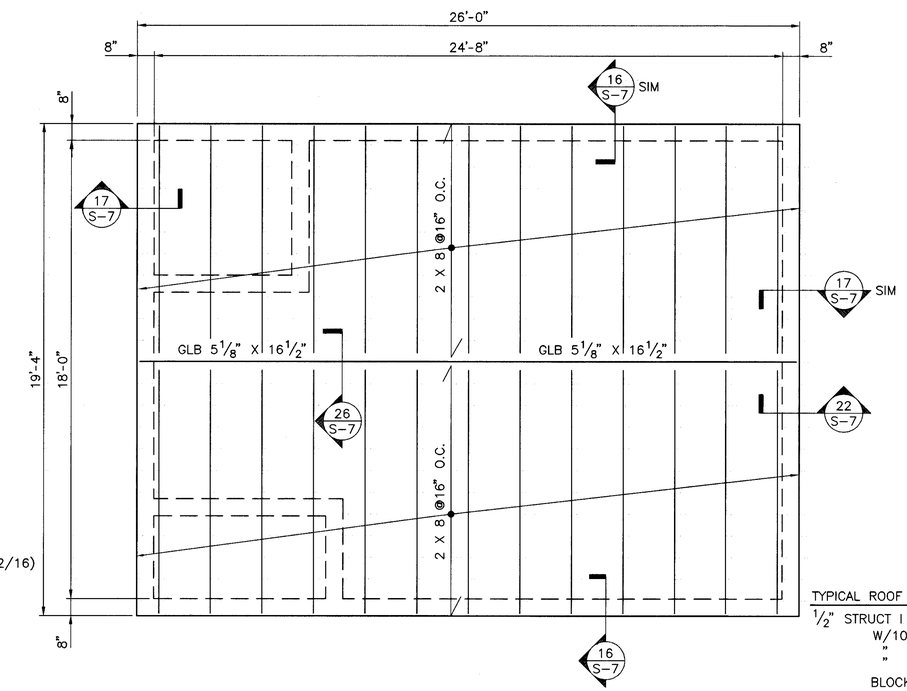

TYPICAL ROOF DIAPHRAGM:

1/2" STRUCT I (5 PLY) A.P.A. RATED SHEATHING (32/16)
W/10d @ 4" O.C. B.N.
" @ 6" O.C. E.N.
" @ 12" O.C. F.N.
BLOCK ALL EDGES
LAY PLY. WD. SHEATHING FACE GRAIN PERPENDICULAR TO JOIST & STAGGER LAYOUT 24" MIN.

ROOF FRAMING PLAN (PUMP BLDG.)

SCALE: 3/8" = 1'-0"

N

S-4

CARLSBAD MUNICIPAL WATER DISTRICT		
SHEET 24	ENGINEERING DEPARTMENT	48 SHEETS

PLANS FOR THE IMPROVEMENT OF:

ROOF FRAMING PLANS

POINSETTIA SEWAGE LIFT STATION

District Engineer WILLIAM E. PLUMMER 28176 RCE — 6-23-97 Date
REGISTRATION EXPIRES 3-31-98

Drawn DN
Checked DWS
CMWD 95-402

REGISTERED PROFESSIONAL ENGINEER GREGG D. RUSSELL No. 3714 Exp. 3/31/98 STRUCTURAL STATE OF CALIFORNIA

REGISTERED PROFESSIONAL ENGINEER ROBERT H. HENDERSHOT No. 2437 Exp. 6/30/97 STRUCTURAL STATE OF CALIFORNIA

R2H ENGINEERING, INC.
CONSULTING STRUCTURAL ENGINEERS
11545 W. BERNARDO CT., SUITE 300
SAN DIEGO, CALIFORNIA 92127
PHONE (619) 673-8416
FAX (619) 673-8418

DISTRICT APPROVED CHANGES

No.	Description	Approved	Date
1	AS-BUILT		

BENCH MARK

Description SEE TITLE SHEET
Location
Record From
Elevation Datum

331-1E
24 of 48
062000

PD 411

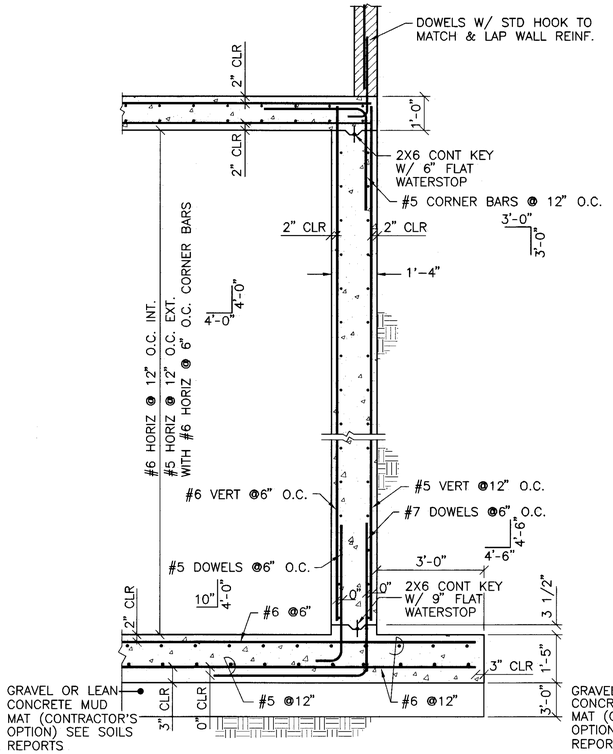

CONCRETE WALL SECTION (1 / S-2)
SCALE: 1/2" = 1'-0"

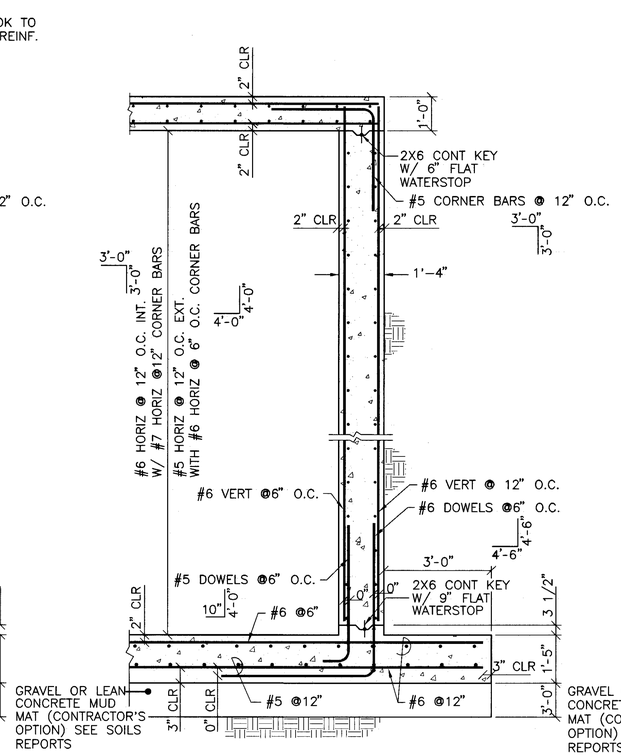

CONCRETE WALL SECTION (2 / S-2)
SCALE: 1/2" = 1'-0"

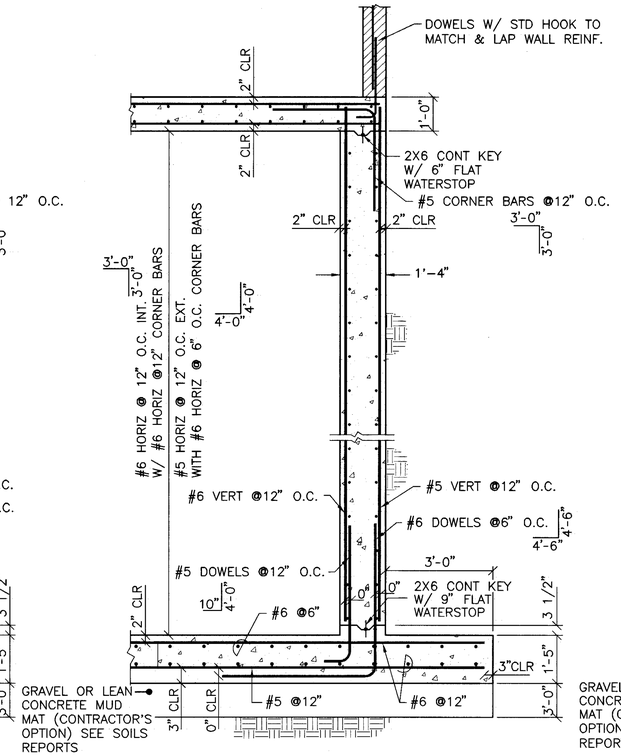

CONCRETE WALL SECTION (3 / S-2)
SCALE: 1/2" = 1'-0"

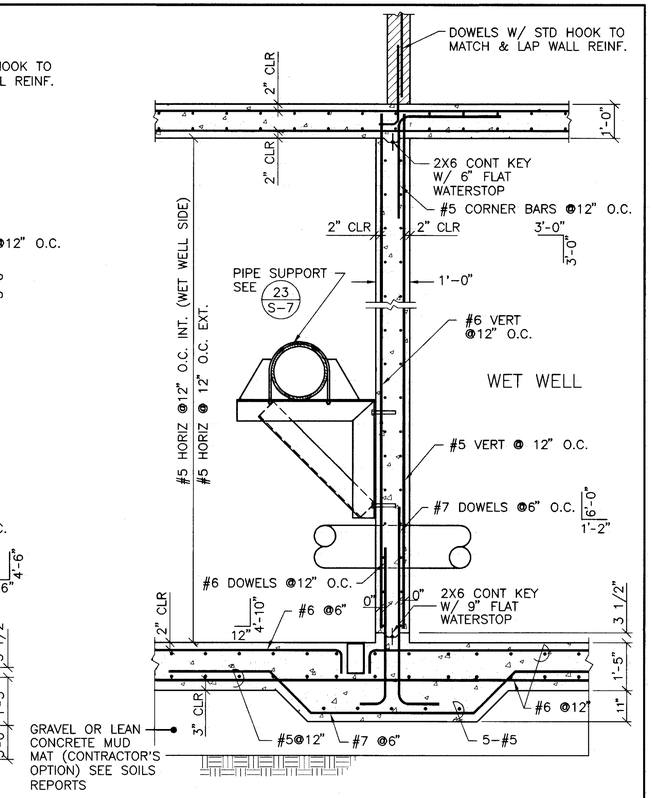

CONCRETE WALL SECTION (4 / S-2)
SCALE: 1/2" = 1'-0"

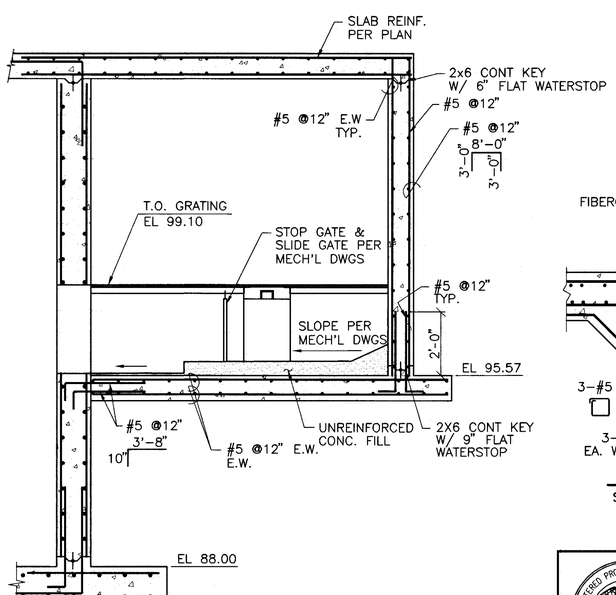

SECTION (5 / S-2)
SCALE: 3/8" = 1'-0"

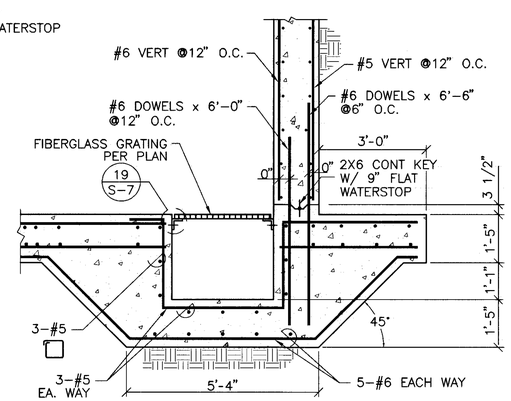

SUMP SECTION (6 / S-2)
SCALE: 1/2" = 1'-0"

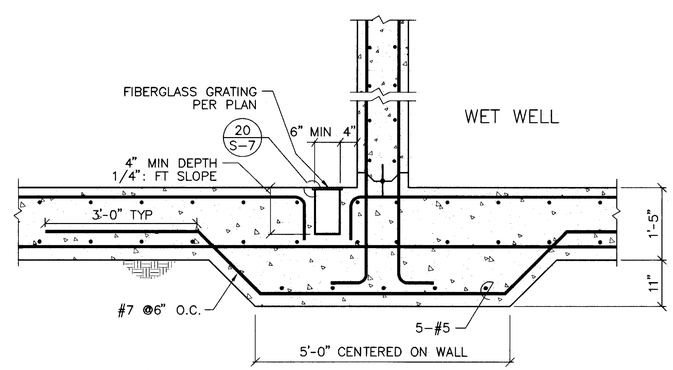

TRENCH DRAIN SECTION (7 / S-2)
SCALE: 3/4" = 1'-0"

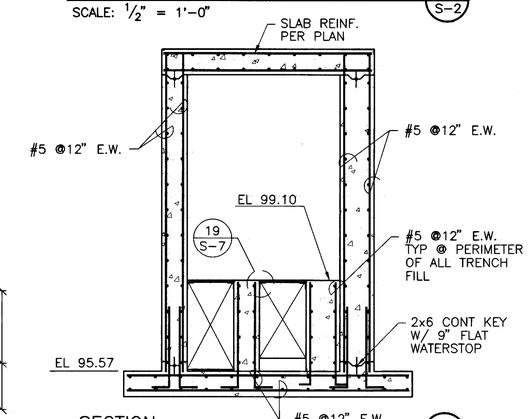

SECTION (8 / S-2)
SCALE: 3/8" = 1'-0"

S-5

REGISTERED PROFESSIONAL ENGINEER — DAVID D. RUSSO — Exp. 3/31/98 — STRUCTURAL — STATE OF CALIFORNIA

REGISTERED PROFESSIONAL ENGINEER — ROBERT H. HENDERSOT — No. 24371 — Exp. 6/30/97 — STRUCTURAL — STATE OF CALIFORNIA

R2H ENGINEERING, INC.
CONSULTING STRUCTURAL ENGINEERS
11545 W. BERNARDO CT., SUITE 300
SAN DIEGO, CALIFORNIA 92127
PHONE (619) 673-8416
FAX (619) 673-8418

DISTRICT APPROVED CHANGES

No.	Description	Approved	Date
1	AS-BUILT		

BENCH MARK
Description SEE TITLE SHEET
Location
Record From
Elevation Datum

CARLSBAD MUNICIPAL WATER DISTRICT

SHEET	ENGINEERING DEPARTMENT	48 SHEETS
25		

PLANS FOR THE IMPROVEMENT OF:
STRUCTURAL DETAILS
POINSETTIA SEWAGE LIFT STATION

William E. Plummer 28176 RCE 6-23-97
District Engineer WILLIAM E. PLUMMER Date
REGISTRATION EXPIRES 3-31-98

Drawn DN
Checked DWS
CMWD 95-402

331-1E
25 of 70
002000

PD 411

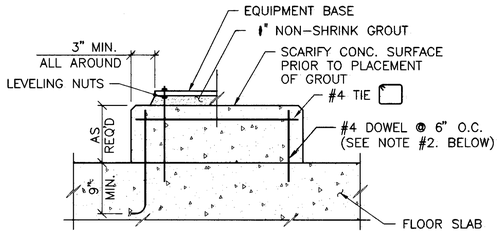

NOTES:

1. EQUIP. PAD DETAIL APPLIES TO EQUIPMENT FURNISHED AND SUPPLIED FOR THIS CONTRACT AND SHALL COMPLY WITH THE DETAIL AND EQUIPMENT MANUFACTURERS RECOMMENDATION AND REQUIREMENTS.
2. IF EQUIP. PAD IS CONSTRUCTED IN CONJUNCTION WITH THE FLOOR SLAB, USE HOOKED DOWELS AND PLACE THE BOLTS PER MANUFACTURERS RECOMMENDATIONS IF EQUIP. PAD IS PLACED AFTER FLOOR SLAB IS COMPLETE, BOLTS AND STRAIGHT DOWELS SHALL BE ANCHORED TO THE SLAB WITH EPOXY GROUT.
3. ANCHOR BOLTS SHALL BE STAINLESS STEEL MATERIAL WITH THE TOP AND BOTTOM 4" THREADED AND SHALL CONFORM WITH THE MANUFACTURERS REQUIREMENTS.
4. USE LEVELING NUTS TO LEVEL EQUIPMENT BASE. DO NOT USE SHIMS.

EQUIPMENT PAD DETAIL (9 / S-2)
SCALE: 1" = 1'-0"

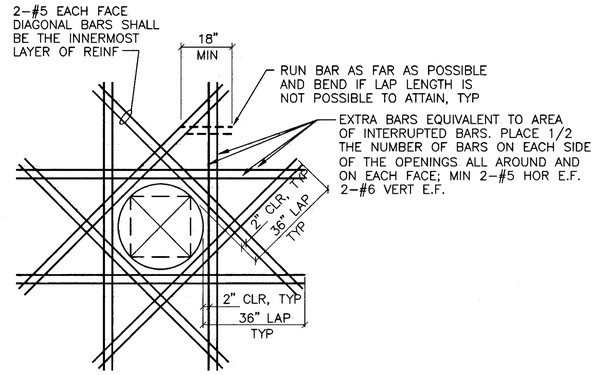

TYP REINF AT CIRCULAR/RECTANGULAR OPENING (10 / –)
SCALE: 1" = 1'-0"

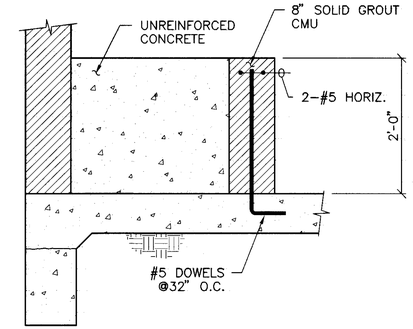

SILENCER SUPPORT (11 / S-3)
SCALE: 1" = 1'-0"

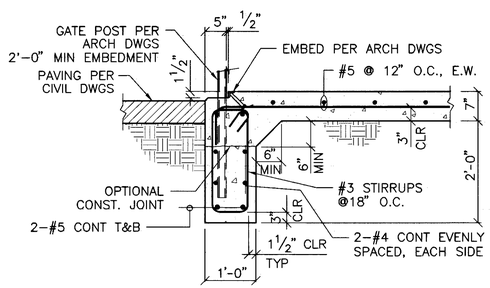

GRADE BEAM – AT GATE (12 / S-6)
SCALE: 1" = 1'-0"

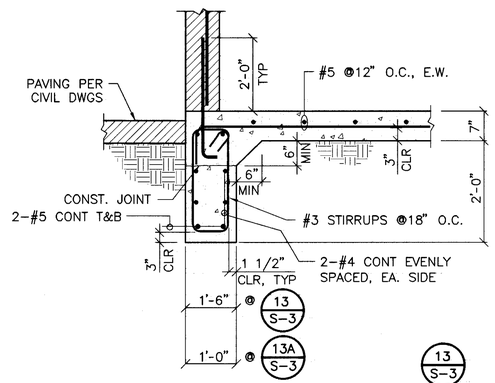

GRADE BEAM AT MASONRY WALL (13 / S-3, 13A / S-3)
SCALE: 3/4" = 1'-0"

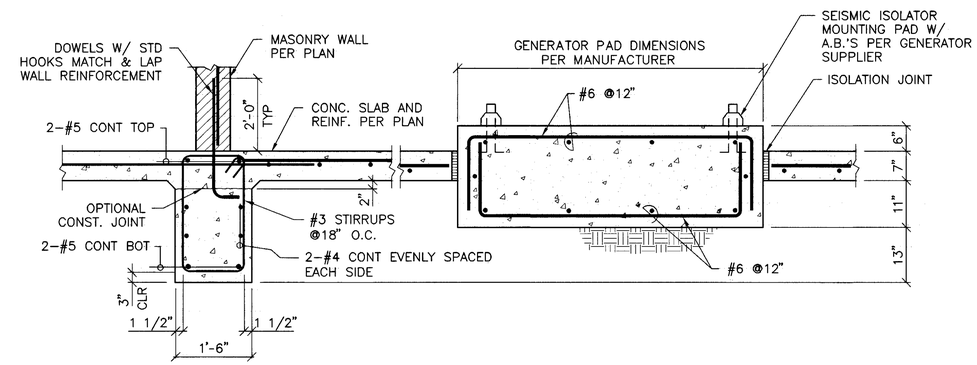

GRADE BEAM AT INTERIOR WALL (14 / S-3)
SCALE: 3/4" = 1'-0"

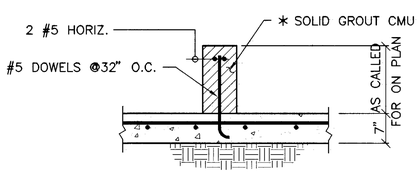

* 8" CMU (15A / S-3)

12" CMU (15 / S-3)

STUB WALL ON SLAB (15 / S-3, 15A / S-3)
SCALE: 3/4" = 1'-0"

REGISTERED PROFESSIONAL ENGINEER — DENIS D. RIBER — No. 3714 — Exp. 3/31/98 — STRUCTURAL — STATE OF CALIFORNIA

REGISTERED PROFESSIONAL ENGINEER — ROBERT H. HENDERSHOT — No. 2437 — Exp. 6/30/97 — STRUCTURAL — STATE OF CALIFORNIA

R2H ENGINEERING, INC.
CONSULTING STRUCTURAL ENGINEERS
11545 W. BERNARDO CT., SUITE 300
SAN DIEGO, CALIFORNIA 92127
PHONE (619) 673-8416
FAX (619) 673-8418

DISTRICT APPROVED CHANGES

No.	Description	Approved	Date
1	AS-BUILT		

BENCH MARK
Description SEE TITLE SHEET
Location
Record From
Elevation Datum

S-6

CARLSBAD MUNICIPAL WATER DISTRICT

SHEET 26	ENGINEERING DEPARTMENT	48 SHEETS

PLANS FOR THE IMPROVEMENT OF:
STRUCTURAL DETAILS
POINSETTIA SEWAGE LIFT STATION

District Engineer WILLIAM E. PLUMMER 28176 RCE 6-23-97 Date
REGISTRATION EXPIRES 3-31-98

Drawn DN
Checked DWS

CMWD 95-402

331-1E 062000
26 of 48

PD 411

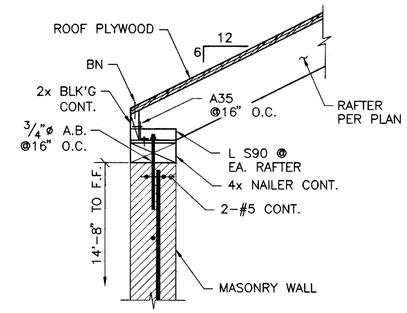

ROOF EDGE (16 / S-4)
SCALE: N.T.S.

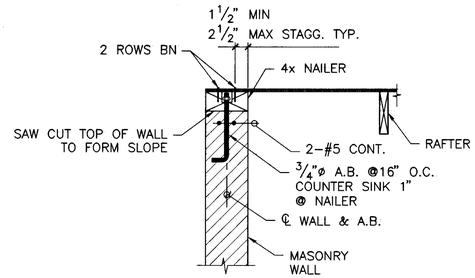

TOP OF SLOPED WALL (17 / S-4)
SCALE: N.T.S.

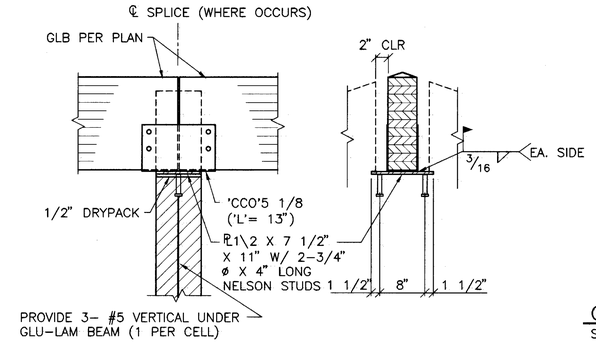

RIDGE BEAM SUPPORT (18 / S-4)
SCALE: N.T.S.

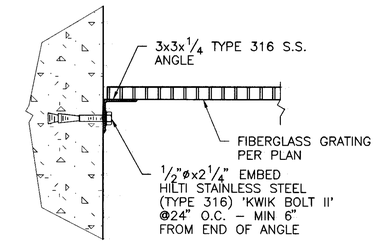

GRATING SUPPORT (19 / S-5)
SCALE: N.T.S.

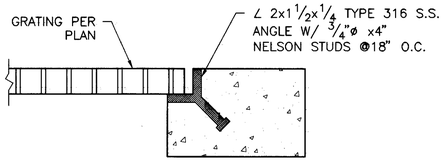

GRATING SUPPORT (20 / S-3)
SCALE: N.T.S.

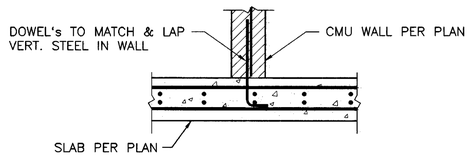

STUB WALL ON SLAB (21 / S-3)
SCALE: 3/4" = 1'-0"

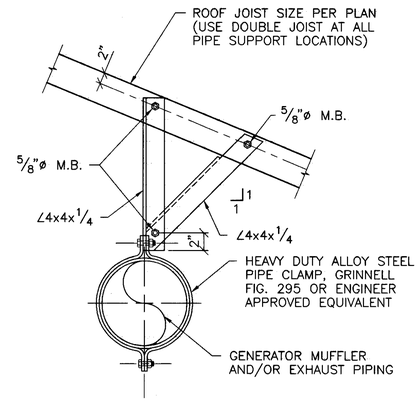

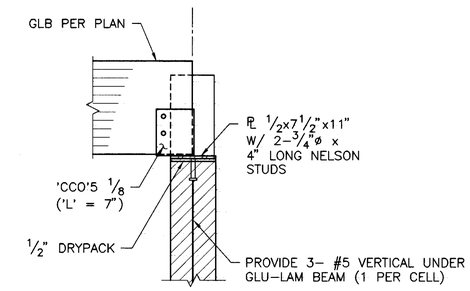

RIDGE BEAM SUPPORT (22 / S-4)
SCALE: 3/4" = 1'-0"

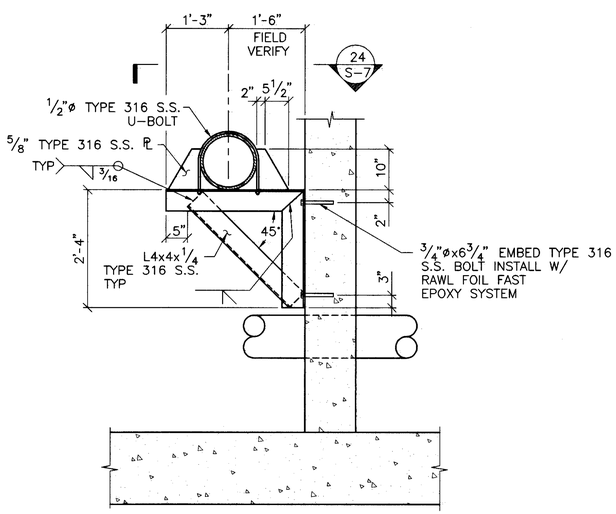

PIPE SUPPORT DETAIL
4 SUPPORTS @10'-0" MAX SPACING (23 / S-5)
SCALE: 3/4" = 1'-0"

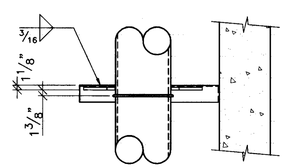

SECTION (24 / -)
SCALE: 3/4" = 1'-0"

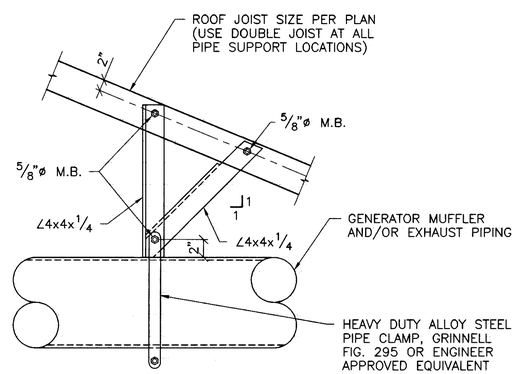

GENERATOR BUILDING PIPE SUPPORTS (25 / -)
SCALE: N.T.S.
SEE MECH'L DWGS FOR LOCATION

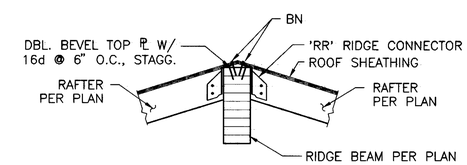

RAFTERS AT RIDGE BEAM (26 / S-4)
SCALE: 3/4" = 1'-0"

S-7

CARLSBAD MUNICIPAL WATER DISTRICT

SHEET	ENGINEERING DEPARTMENT	48 SHEETS
27		

PLANS FOR THE IMPROVEMENT OF:
STRUCTURAL DETAILS
POINSETTIA SEWAGE LIFT STATION

District Engineer WILLIAM E. PLUMMER RCE 28176 Date 6-23-97
REGISTRATION EXPIRES 3-31-98

Drawn DN
Checked DWS
CMWD 95-402

REGISTERED PROFESSIONAL ENGINEER GEORGE D. BLACK No. 3714 Exp. 3/31/98 STRUCTURAL STATE OF CALIFORNIA

REGISTERED PROFESSIONAL ENGINEER ROBERT H. HENDERSHOT No. 2437 Exp. 6/30/97 STRUCTURAL STATE OF CALIFORNIA

R2H ENGINEERING, INC.
CONSULTING STRUCTURAL ENGINEERS
11545 W. BERNARDO CT., SUITE 300
SAN DIEGO, CALIFORNIA 92127
PHONE (619) 673-8416
FAX (619) 673-8418

DISTRICT APPROVED CHANGES

No.	Description	Approved	Date
1	AS-BUILT		

BENCH MARK
Description SEE TITLE SHEET
Location
Record From
Elevation Datum

331-1E
27 of 48
062000

PD 411

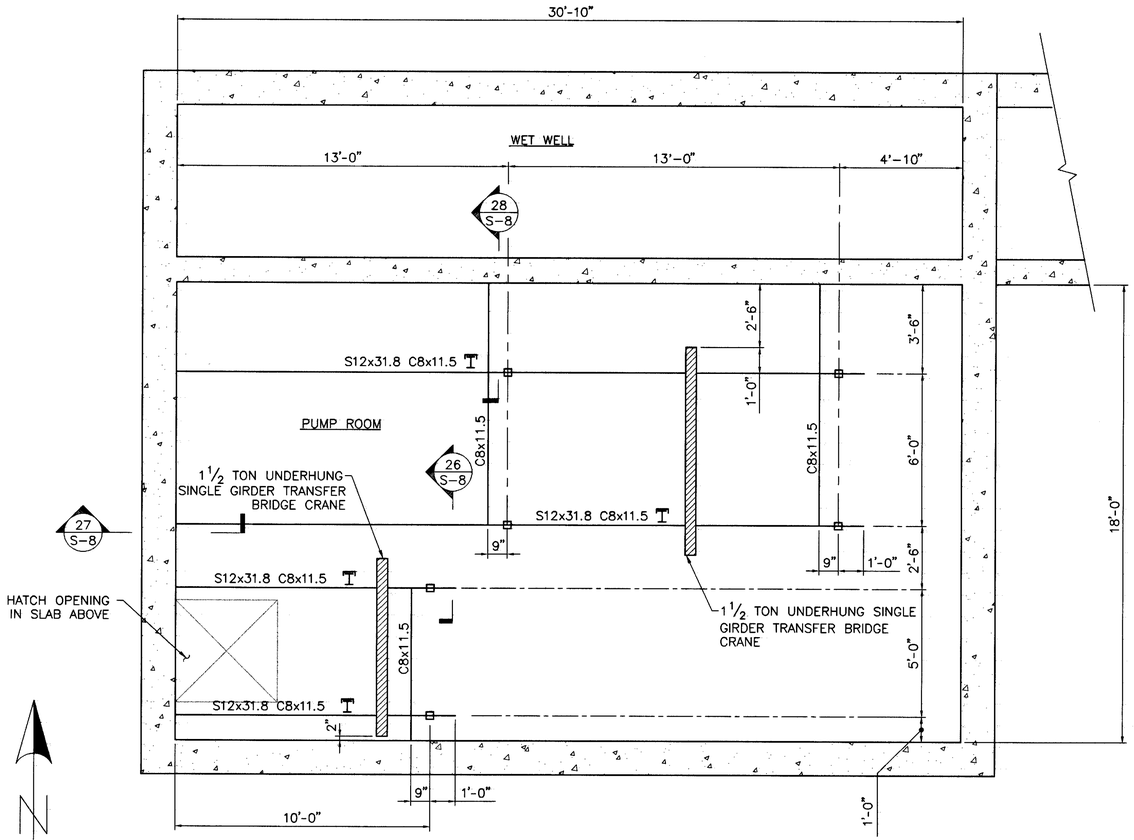

LOWER FLOOR PLAN (PUMP BUILDING)

SCALE: 3/8" = 1'-0"

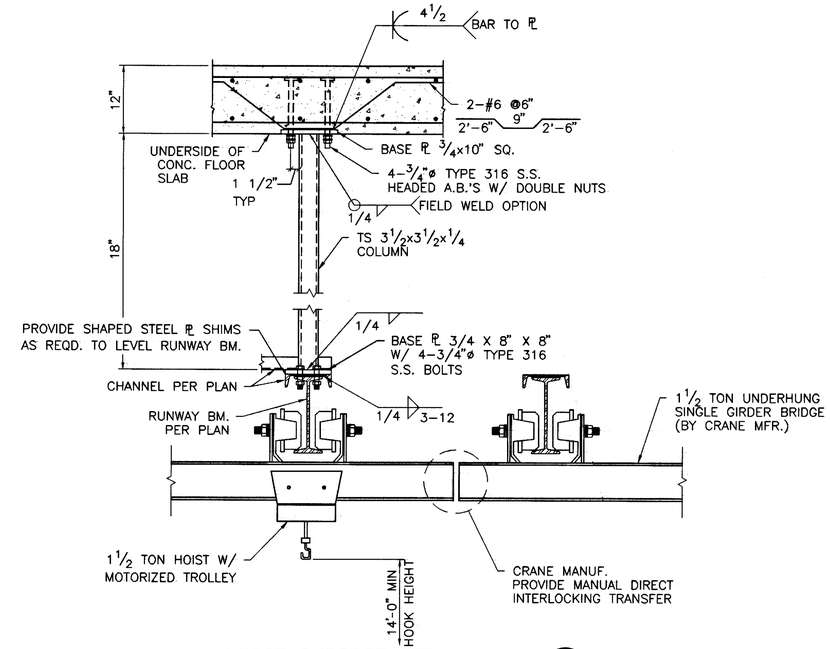

BRIDGE SUPPORT DETAIL (26)

SCALE: 1" = 1'-0"

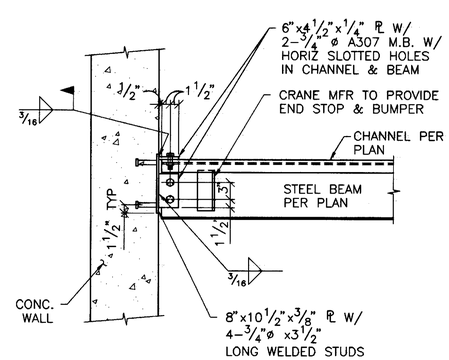

TROLLEY BEAM AT WALL (27)

SCALE: 1" = 1'-0"

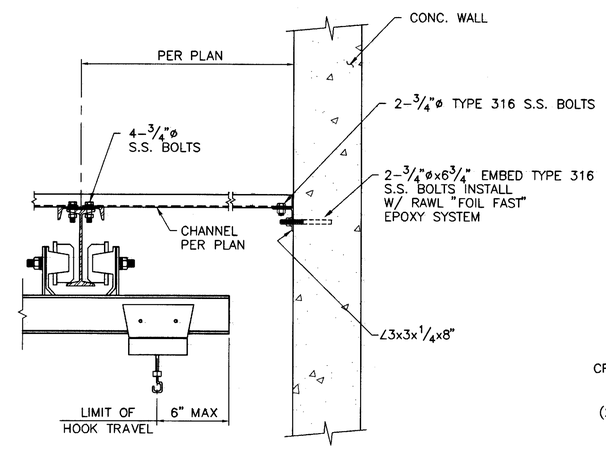

BRIDGE SUPPORT DETAIL (28)

SCALE: 1" = 1'-0"

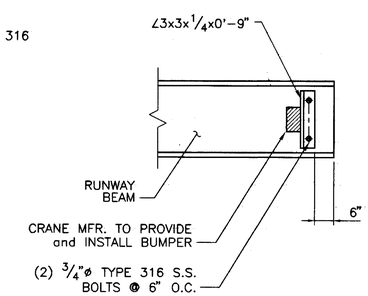

END STOP DETAIL (29)

SCALE: N.T.S.

S-8

CARLSBAD MUNICIPAL WATER DISTRICT		
SHEET 28	ENGINEERING DEPARTMENT	48 SHEETS

PLANS FOR THE IMPROVEMENT OF:

CRANE RUNWAY FRAMING PLAN

POINSETTIA SEWAGE LIFT STATION

District Engineer WILLIAM E. PLUMMER 28176 RCE — 6-23-97 Date

REGISTRATION EXPIRES 3-31-98

Drawn DN

Checked DWS

CMWD 95-402

REGISTERED PROFESSIONAL ENGINEER — STRUCTURAL — STATE OF CALIFORNIA

REGISTERED PROFESSIONAL ENGINEER — ROBERT H. HENDERSON — No. 2437 — Exp. 6/30/97 — STRUCTURAL — STATE OF CALIFORNIA

R2H ENGINEERING, INC.
CONSULTING STRUCTURAL ENGINEERS
11545 W. BERNARDO CT., SUITE 300
SAN DIEGO, CALIFORNIA 92127
PHONE (619) 673-8416
FAX (619) 673-8418

DISTRICT APPROVED CHANGES

No.	Description	Approved	Date
1	AS-BUILT		

BENCH MARK

Description SEE TITLE SHEET

Location

Record From

Elevation Datum

28 of 48

33/-1E

PD 411

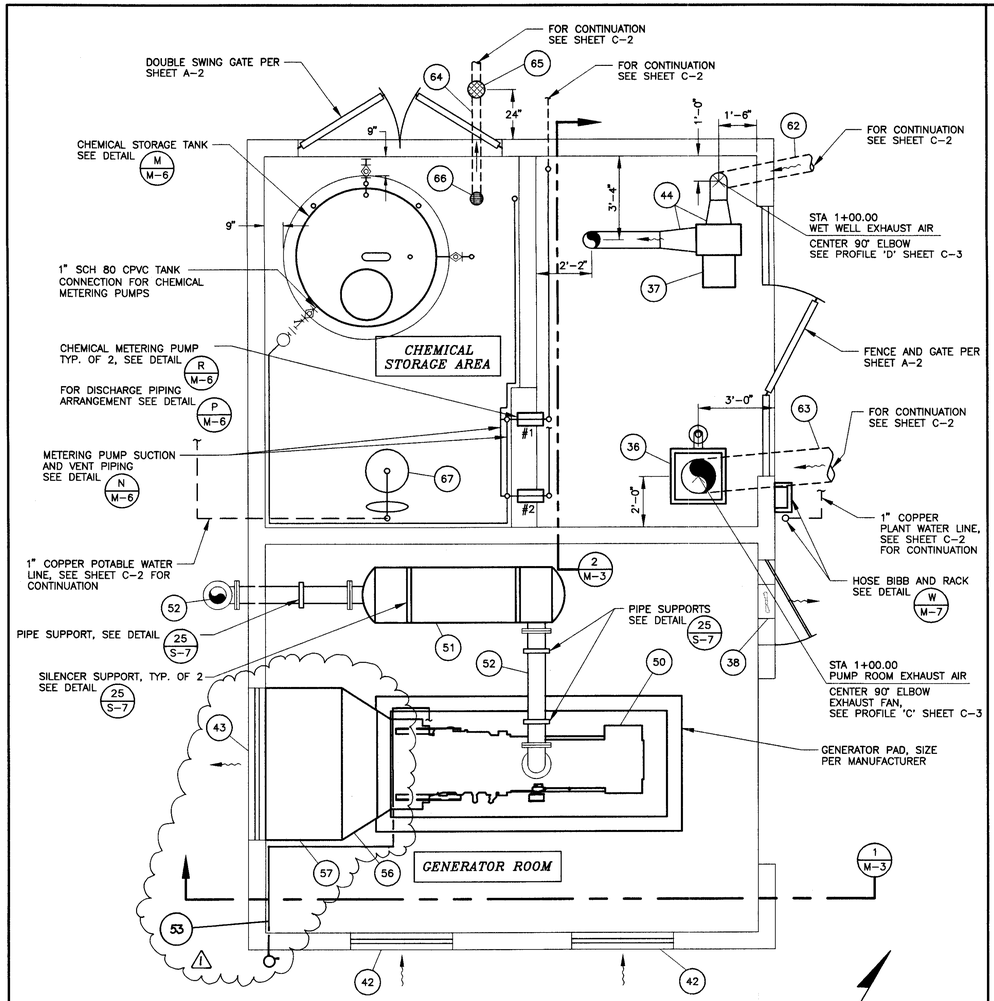

EQUIPMENT BUILDING PLAN – GRADE LEVEL

SCALE: 3/8" = 1'-0"

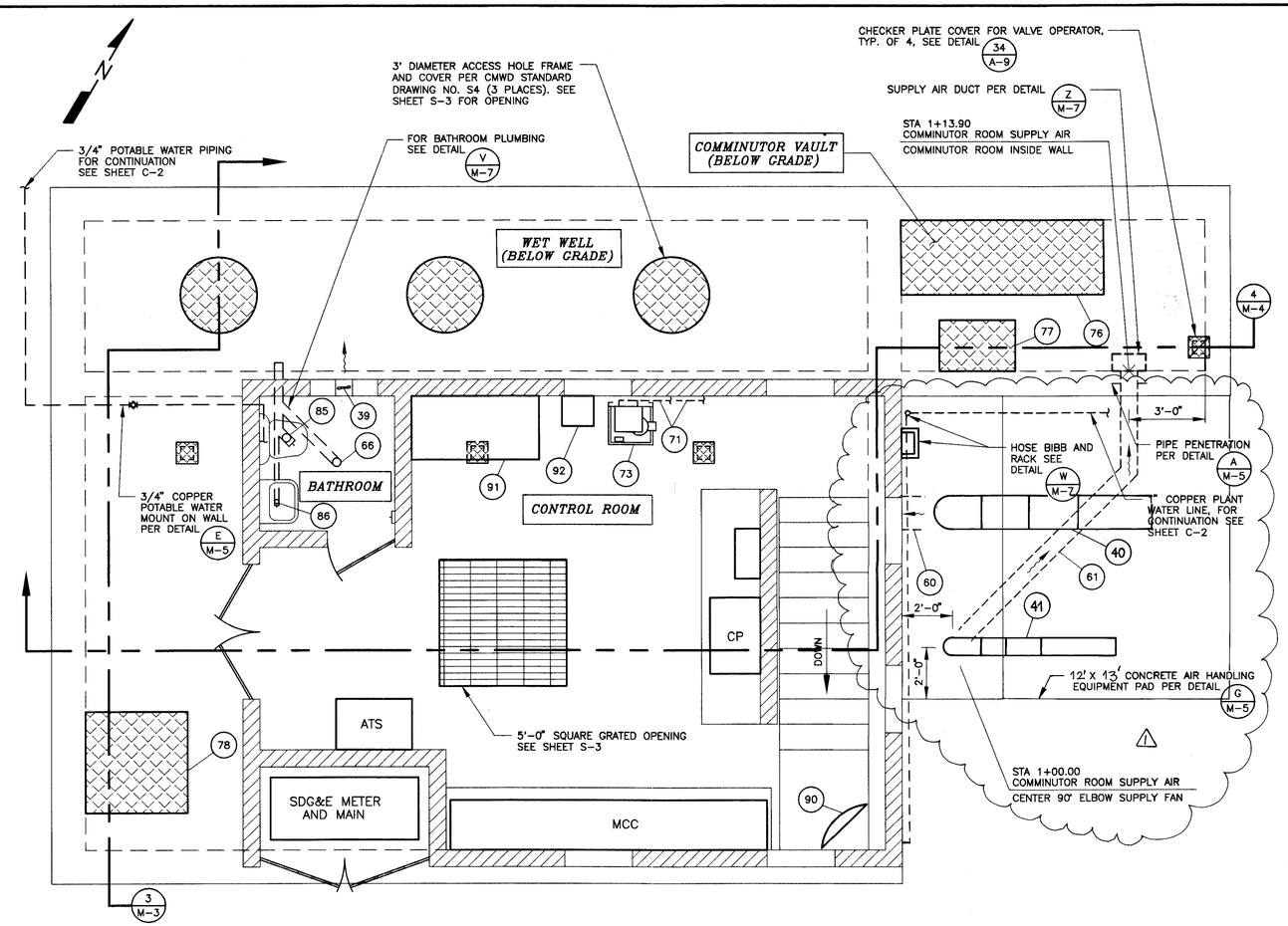

PUMP BUILDING PLAN – GRADE LEVEL

SCALE: 3/8" = 1'-0"

MATERIAL LIST

36	PUMP ROOM EXHAUST AIR FAN.
37	WET WELL EXHAUST AIR FAN.
38	GENERATOR ROOM WALL MOUNTED EXHAUST FAN. LOCATED ABOVE DOOR.
42	4'-0" X 6'-8" INTAKE LOUVER, TYPICAL OF 2.
43	6'-0" X 9'-0" EXHAUST LOUVER.
44	FRP TRANSITION PIECES AS REQUIRED TO CONNECT FAN TO AIR PIPING.
50	STANDBY DIESEL ENGINE GENERATOR SET.
51	SUPER-CRITICAL EXHAUST SILENCER.
52	8" SCHEDULE 40 STEEL EXHAUST PIPING.
53	1 1/4" BLACK STEEL SCHEDULE 40 DIESEL FUEL VENT PIPING.
56	GENERATOR AIR EXHAUST DUCT.
57	SOUND ATTENUATOR PER SPECIFICATION SECTION 10200.
62	8" WET WELL EXHAUST AIR PIPING.
63	16" PUMP ROOM EXHAUST AIR PIPING.
64	4" PVC C-900 DRAIN PIPING, INSTALL WITH 36" MINIMUM COVER AND ROUTE TO WET WELL AT 2 PERCENT MINIMUM SLOPE.
65	4" BURIED RESILIENT SEAT GATE VALVE WITH EXTENSION STEM AND 2" OPERATING NUT INSTALLED INSIDE 8" DUCTILE IRON PIPE VALVE CAN.
66	4" FLOOR DRAIN. SEE DETAIL T ON SHEET M-6.
67	COMBINATION EMERGENCY EYEWASH AND SHOWER STATION. UNIT SHALL BE SECURED IN THE CONCRETE PAD IN SUCH A WAY TO BE SELF SUPPORTING. THE UNIT SHALL BE MODEL NUMBER 8309 AS MANUFACTURED BY HAWS DRINKING FAUCET COMPANY, OR EQUAL.

MATERIAL LIST

39	BATHROOM WALL MOUNTED EXHAUST FAN.
40	PUMP ROOM SUPPLY AIR FAN. PROVIDE BRACING AS REQUIRED TO ADEQUATELY SUPPORT FAN.
41	COMMINUTOR VAULT SUPPLY AIR FAN. PROVIDE BRACING AS REQUIRED TO ADEQUATELY SUPPORT FAN.
60	16" PUMP ROOM SUPPLY AIR PIPING. PROVIDE TRANSITION TO FAN AS NECESSARY.
61	8" COMMINUTOR VAULT SUPPLY AIR PIPING. PROVIDE TRANSITION TO FAN AS NECESSARY.
66	4" FLOOR DRAIN. SEE DETAIL T ON SHEET M-6.
71	3/4" STAINLESS STEEL HYDRAULIC SUPPLY AND RETURN LINES, ROUTE BETWEEN HYDRAULIC POWER UNIT AND COMMINUTOR HYDRAULIC MOTOR TO BEST SUIT FIELD CONDITIONS.
73	HYDRAULIC POWER UNIT AND CONTROL PANEL FOR COMMINUTOR. PROVIDE ON STAND SUPPLIED BY MANUFACTURER.
76	3'-0" X 8'-0" COMMINUTOR VAULT ACCESS HATCH, ALUMINUM CHECKER PLATE, SPRING ASSISTED, HINGED COVER WITH RECESSED LOCKING HASP, BILCO, DUR-RED, OR EQUAL.
77	2'-0" X 3'-0" SINGLE LEAF HATCH, ALUMINUM CHECKER PLATE, SPRING ASSISTED HINGED COVER WITH RECESSED LOCKING HASP, BILCO, DUR-RED, NYSTROM, OR EQUAL.
78	4'-0" X 4'-0" EQUIPMENT ACCESS HATCH, SINGLE LEAF ALUMINUM CHECKER PLATE, SPRING ASSISTED, HINGED COVER WITH RECESSED LOCKING HASP, BILCO, DUR-RED, NYSTROM, OR EQUAL. HATCH SHALL OPEN TOWARD EAST.
85	4" TOILET DRAIN WITH CLEANOUT AND VENT THROUGH ROOF
86	2" LAVATORY DRAIN WITH CLEANOUT AND VENT THROUGH ROOF
90	30-INCH DIAMETER CIRCULAR CONVEX ACRYLIC MIRROR WITH SWIVEL BALL ASSEMBLY AND HEAVY GAUGE STEEL BRACKET, BROUSSARD MODEL P300 OR EQUAL.
91	PROVIDE 60" X 30" ELECTRICALLY WIRED ADJUSTABLE HEIGHT WORK STATION WITH OPTIONAL INSTRUMENT SHELF, MCMASTER CARR NO. 9088T21, OR EQUAL
92	CABINET DEHUMIDIFIER WITH 5 GAL/DAY CAPACITY, MCMASTER CARR NO. 2149K22, OR EQUAL

REGISTERED PROFESSIONAL ENGINEER DEXTER S. WILSON No. 34597 Exp. 6/30/98 CIVIL STATE OF CALIFORNIA

PLANS PREPARED BY
WILSON ENGINEERING
CONSULTING ENGINEERS
703 PALOMAR AIRPORT ROAD, SUITE 300
CARLSBAD, CA 92009 (619) 438-4422

6-16-97
DEXTER S. WILSON DATE

DISTRICT APPROVED CHANGES			
No.	Description	Approved	Date
1	AS-BUILT		

BENCH MARK
Description SEE TITLE SHEET
Location
Record From
Elevation Datum

M-1

CARLSBAD MUNICIPAL WATER DISTRICT

SHEET 29	ENGINEERING DEPARTMENT	48 SHEETS

PLANS FOR THE IMPROVEMENT OF:
EQUIPMENT BUILDING PLAN, PUMP BUILDING PLAN
POINSETTIA SEWAGE LIFT STATION

William E. Plummer 28176 6-23-97
District Engineer WILLIAM E. PLUMMER RCE Date
REGISTRATION EXPIRES 3-31-98

Drawn PP
Checked AO
CMWD 95-402

331-1E
29 of 48

PD 411

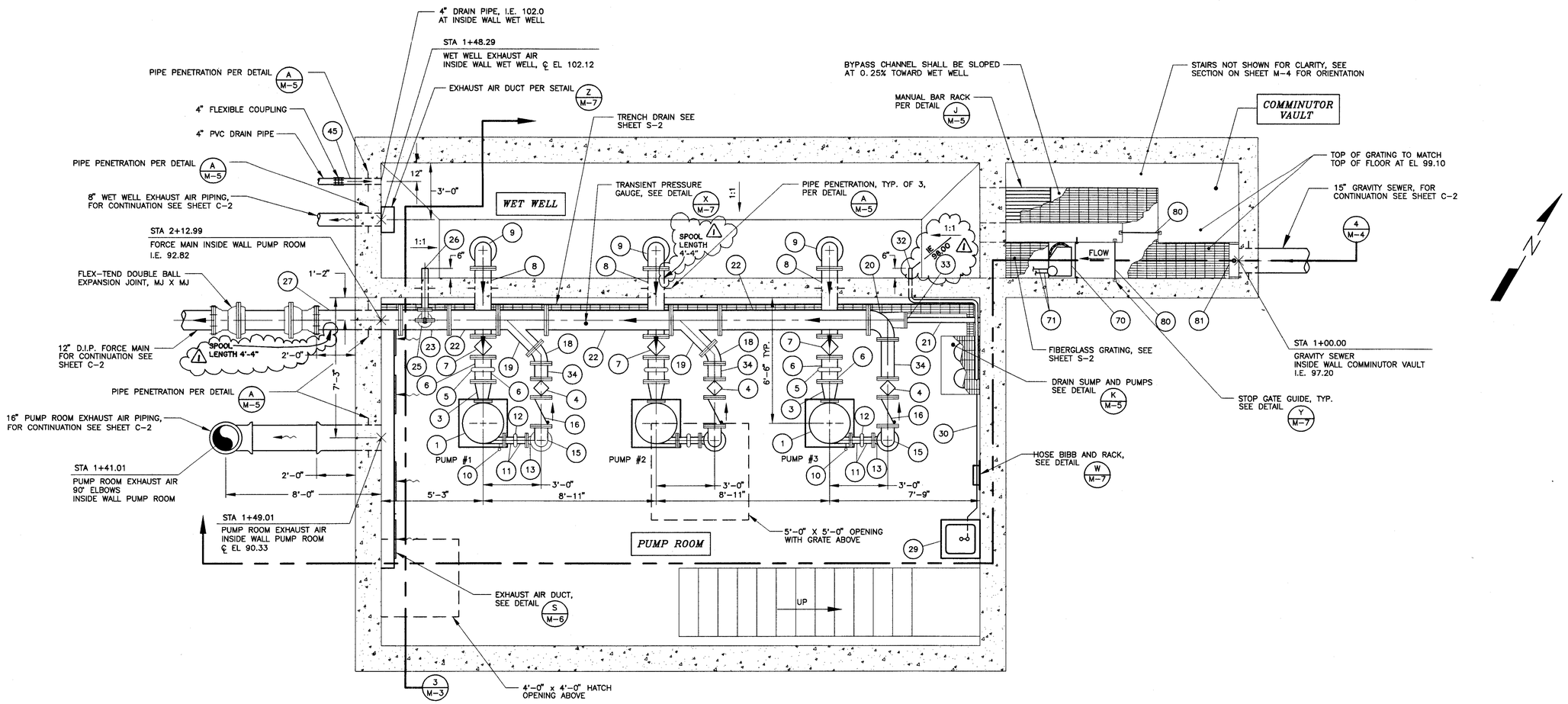

PUMP BUILDING PLAN – BELOW GRADE

SCALE: 3/8" = 1'-0"

MATERIALS LIST

1. 125 HP DRY PIT SUBMERSIBLE MOTOR, TYPICAL OF 3.
3. 10" X SIZE TO FIT SELECTED PUMP SUCTION, FLANGED, DUCTILE IRON PIPE ECCENTRIC REDUCER, TYPICAL OF 3.
4. 8" FLANGED PLUG VALVE WITH HANDWHEEL OPERATOR, TYPICAL OF 3.
5. 10" STYLE 31 VICTAULIC COUPLING, TYPICAL OF 3.
6. 10" FLANGED BY GROOVED END DUCTILE IRON PIPE SPOOL, TYPICAL OF 6.
7. 10" FLANGED PLUG VALVE WITH EXTENSION STEM, TYPICAL OF 3.
8. 10" FLANGED DUCTILE IRON PIPE SPOOL WITH WALL COLLAR, TYPICAL OF 3.
9. 10" FLANGED X FLARED DUCTILE IRON PIPE SHORT RADIUS 90 DEGREE ELBOW, TYPICAL OF 3.
10. 3/4" THREADED TAP AND PRESSURE GAUGE, TYPICAL OF 6, SEE DETAIL H SHEET M-5.
11. FLANGED BY GROOVED END DUCTILE IRON PIPE SPOOL, SIZE TO MATCH PUMP DISCHARGE, TYPICAL OF 6.
12. STYLE 31 VICTAULIC COUPLING, SIZE TO MATCH PUMP DISCHARGE, TYPICAL OF 3.
13. SIZE TO FIT SELECTED PUMP DISCHARGE X 8" FLANGED DUCTILE IRON PIPE 90 DEGREE INCREASING BASE ELBOW, TYPICAL OF 3.
15. 8" FLANGED DUCTILE IRON PIPE 90 DEGREE BEND, TYPICAL OF 3.
16. 8" FLANGED CHECK VALVE, SPRING LOADED, TYPICAL OF 3.
18. 8" FLANGED DUCTILE IRON PIPE 45 DEGREE BEND, TYPICAL OF 2.
19. 12" X 12" X 8" FLANGED DUCTILE IRON PIPE WYE, TYPICAL OF 2.
20. 12" X 8" FLANGED DUCTILE IRON PIPE 90 DEGREE BASE ELBOW.
21. 3" SCHEDULE 80 STEEL PIPE, FLANGED X PLAIN END, FIELD WELD PLAIN END TO BLIND FLANGE. ANCHOR FLANGED END IN PUMP ROOM WALL, EMBED 3" MIN.
22. 12" FLANGED DUCTILE IRON PIPE SPOOL, TYPICAL OF 3, LENGTH AS REQUIRED.
23. 12" X 12" X 4" FLANGED DUCTILE IRON PIPE TEE.
25. 4" FLANGED ANGLE SURGE RELIEF VALVE.
26. 4" FLANGED X PLAIN END DUCTILE IRON PIPE SPOOL WITH WALL COLLAR.
27. 12" FLANGED X PLAIN END DUCTILE IRON PIPE SPOOL WITH WALL COLLAR.
29. WALL MOUNTED UTILITY SINK AND FAUCET, FIBERGLASS REINFORCED PLASTIC, RUST AND CORROSION RESISTANT, 20 GALLON MINIMUM CAPACITY.
30. 2" ABS UTILITY SINK DRAIN PIPE, ROUTE TO SUMP AT MINIMUM 2 PERCENT SLOPE.
32. 2" SCHEDULE 80 PVC SUMP PUMP DISCHARGE PIPE.
33. STEEL BLIND FLANGE, CLASS F
34. 8" FLANGED DUCTILE IRON PIPE SPOOL, LENGTH AS REQUIRED, TYPICAL OF 3.
45. 4" DUCTILE IRON PIPE SPOOL WITH WALL COLLAR
70. HYDRAULICALLY DRIVEN COMMINUTOR.
71. 3/4" STAINLESS STEEL HYDRAULIC SUPPLY AND RETURN LINES, ROUTE BETWEEN HYDRAULIC POWER UNIT AND COMMINUTOR HYDRAULIC MOTOR TO BEST SUIT FIELD CONDITIONS. SUPPORT AT 6 FOOT INTERVALS MAXIMUM PER DETAIL 'C' SHEET M-5.
80. 316 STAINLESS STEEL STOP GATE, WATERMAN OR EQUAL, SEE SPECIFICATION SECTION 15100, TYPICAL OF 2.
81. 18" X 18" STAINLESS STEEL SLIDE GATE, WALL MOUNTED, WITH RISING STEM AND 2" OPERATING NUT, SEE SPECIFICATION SECTION 15100.

M-2

CARLSBAD MUNICIPAL WATER DISTRICT

SHEET 30	ENGINEERING DEPARTMENT	48 SHEETS

PLANS FOR THE IMPROVEMENT OF:

PUMP BUILDING PLAN – BELOW GRADE

POINSETTIA SEWAGE LIFT STATION

District Engineer WILLIAM E. PLUMMER 28176 RCE — Date 6-23-97
REGISTRATION EXPIRES 3-31-98

Drawn PP
Checked AO

CMWD 95-402

REGISTERED PROFESSIONAL ENGINEER — DEXTER S. WILSON — No. 28176 — CIVIL — STATE OF CALIFORNIA — EXP. 3/30/98

PLANS PREPARED BY
WILSON ENGINEERING
CONSULTING ENGINEERS
703 PALOMAR AIRPORT ROAD, SUITE 300
CARLSBAD, CA 92009 (619) 438-4422
DEXTER S. WILSON — DATE 6-16-97

DISTRICT APPROVED CHANGES

No.	Description	Approved	Date
1	AS-BUILT		

BENCH MARK
Description SEE TITLE SHEET
Location
Record From
Elevation Datum

331-1E
30 of 48
0062000

PD 411

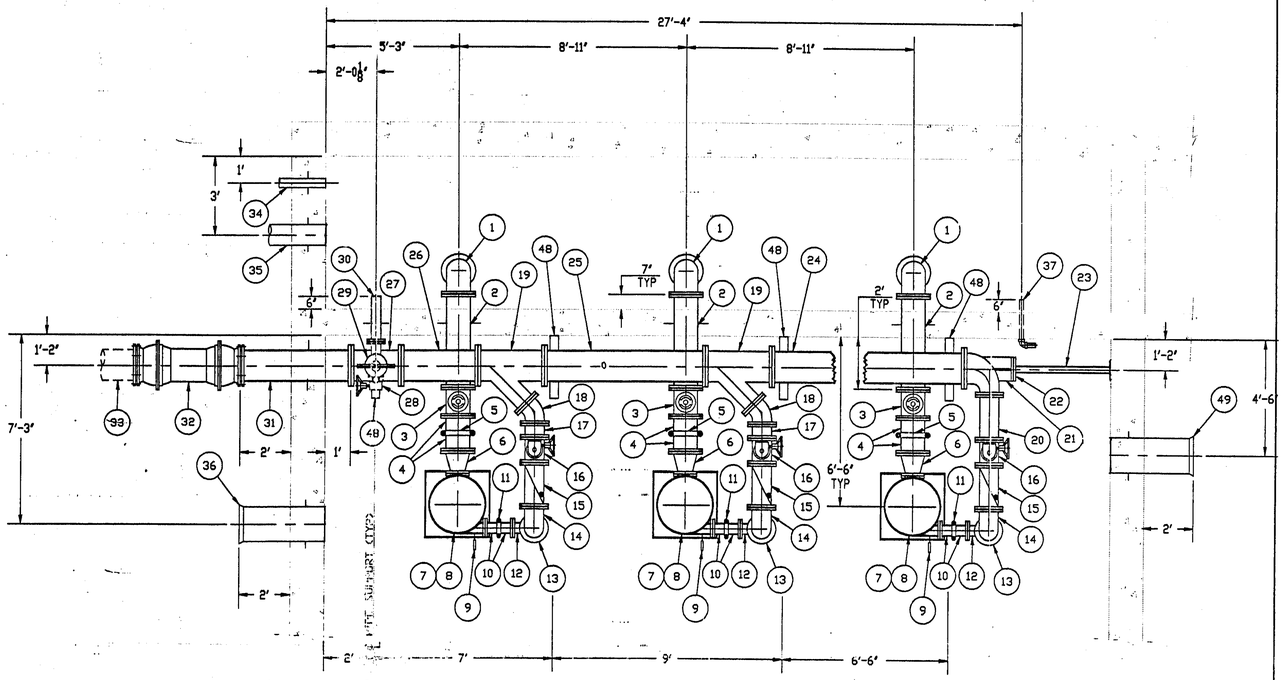

PUMP BUILDING PIPING PLAN

SCALE: 3/8" = 1'-0"

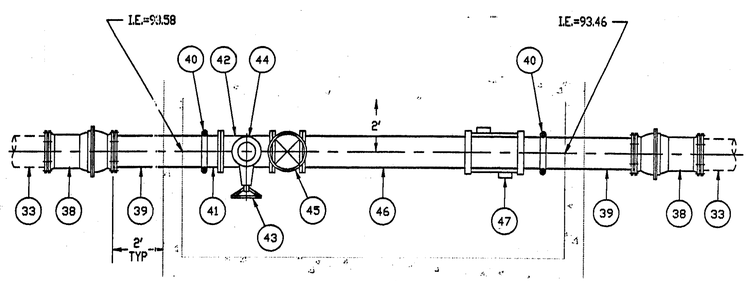

METER AND EMERGENCY BYPASS CONNECTION VAULT

SCALE: 3/8" = 1'-0"

MATERIALS LIST

#	DESCRIPTION	LAY LENGTH (FT)	CENTERLINE ELEV	QUANTITY
1	10" FLANGE x FLARE DIP 90° ELBOW			3
2	10" FLANGED DIP SPOOL W/ WALL COLLAR, W/3/4" Threaded Tap + Pressure Gauge	3.583	89.88	3
3	10" FLANGED PLUG VALVE W/ EXTENSION STEM.	1.083		3
4	10" FLANGE x GROOVED END DIP SPOOL.	~~0.580~~ .538	89.88	6
5	10" STYLE 31 VICTAULIC COUPLING.			3
6	10" x 6" FLANGED DIP ECC RDCR	1.000		3
7	MAIN SEWAGE PUMP 6" SUCTION x 4" DISCHARGE.			3
8	125 HP DRY PIT SUBMERSIBLE MOTOR			3
9	3/4" THREADED TAP AND PRESSURE GAUGE.			6
10	4" FLANGE x GROOVED END DIP SPOOL.	~~0.531~~ .57	91.12	6
11	4" STYLE 31 VICTAULIC COUPLING.			3
12	4" x 8" FLANGED DIP 90° ICREASING BASE ELBOW.			3
13	8" FLANGED DIP SPOOL. .69	~~0.870~~		3
14	8" FLANGED DIP 90° ELBOW.			3
15	8" FLANGED CHECK VALVE, SPRING LOADED.	1.625		3
16	8" FLANGED PLUG VALVE W/ HANDWHEEL OPERATOR.	0.958		3
17	8" FLANGED DIP SPOOL. 0.630	~~0.548~~	93.32	2
18	8" FLANGED DIP 45° ELBOW.		93.32	2
19	12" x 12" x 8" FLANGED DIP WYE. Dale= 2'6 3/4 / Dale= 2'6 1/4 Length 2.5			2
20	8" FLANGED DIP SPOOL. 1.560	~~1.776~~	93.32	1
21	8" x 12" FLANGED DIP 90° ICREASING BASE ELBOW.			1
22	STEEL BLIND FLANGE, 6"			1
23	3" FLANGE x PLAIN END, SCHD 80 STL PIPE. 3.760	~~3.969~~		1
24	12" FLANGED DIP SPOOL.	~~7.526~~ 7.64	93.32	1
25	12" FLANGED DIP SPOOL. W/ Transient Pressure Gauge	~~6.292~~ 6.40	93.32	1
26	12" FLANGED DIP SPOOL.	~~2.984~~ 3.0	93.32	1
27	12" x 12" x 4" FLANGED DIP TEE.	2.000	93.32	1
28	4" FLANGED PLUG VALVE W/ HANDWHEEL OPERATOR.			1
29	4" FLANGED ANGLE SURGE RELIEF VALVE.			1
30	4" FLANGE x PLAIN END DIP SPOOL W/ WALL COLLAR.	1.734	95.92	1
31	12" FLANGE x PLAIN END DIP SPOOL W/ WALL COLLAR.	4.333	93.32	1
32	12" MJ x MJ FLEX-TEND DBL BALL EXPANSION JOINT.			1
33	12" DIP FORCE MAIN			
34	4" DIP SPOOL W/ WALL COLLAR.	3.333	102.19	1
35	8" WET WELL EXHAUST AIR PIPING		102.47	
36	16" PUMP ROOM EXHAUST AIR PIPING		90.33	
37	2" SCHD 80 PVC SUMP PUMP DISCHARGE PIPE.		98.00	
38	12" MJ x MJ FLEX-TEND SINGLE BALL EXPANSION JOINT.			2
39	12" GROOVED END x PLAIN END DIP SPOOL.	3.615	SEE PLAN	2
40	12" STYLE 31 VICTAULIC COUPLING.			2
41	12" FLANGE x GROOVED END DIP SPOOL	~~0.635~~ 0.635		1
42	12" x 12" x 8" FLANGED DIP TEE.	2.000		1
43	8" FLANGED GATE VALVE W/ HANDWHEEL OPERATOR.	0.958		1
44	8" DIP BLIND FLANGE.			1
45	12" FLANGED GATE VALVE W/ HANDWHEEL OPERATOR.	1.167		1
46	12" FLANGE x GROOVED END DIP SPOOL.	~~0.438~~ 8.79		1
47	FLOW METER ASSEMBLY			1
48	24" x 4" x 1/4" TYPE 316 S.S. PIPE SUPPORT.			4
49	16" PUMP ROOM EXHAUST AIR PIPING		102.33	1

#	LINING	APPLICABLE PIECE NUMBERS
1	35 MILL POLYURETHANE LINING	1,2,4,6,10,12,13,14,17,18,19,20,21,24,25,26,27,30,31,33,39,41,42,44,46
2	16 MIL COATING	34,35,36,49
3	PAINTED / SECTION 09900	EXCLUDE 32,33,34,35,38

#	MARKERS	To be determined in the field
1	SEWER FORCE MAIN	
2	SEWER - GRAVITY	
3	DRAINLINE	
4	CHLORINE FEED LINE	
5	POTABLE WATER	
6	PLANT WATER	

M-2a

⚠ THIS SHEET ADDED

CARLSBAD MUNICIPAL WATER DISTRICT

SHEET 30a — ENGINEERING DEPARTMENT — 48 SHEETS

PLANS FOR THE IMPROVEMENT OF:

PUMP BUILDING PLAN – BELOW GRADE

POINSETTIA SEWAGE LIFT STATION

District Engineer — RCE — Date

Drawn BAC

Checked AO

CMWD 95-402

WILSON ENGINEERING
CONSULTING ENGINEERS
703 PALOMAR AIRPORT ROAD, SUITE 300
CARLSBAD, CA 92009 (619) 438-4422

DISTRICT APPROVED CHANGES

No.	Description	Approved	Date
⚠	AS BUILT		

BENCH MARK

Description SEE TITLE SHEET

Location

Record From

Elevation — Datum

331-1 A 062000
36A of 48

PD 411

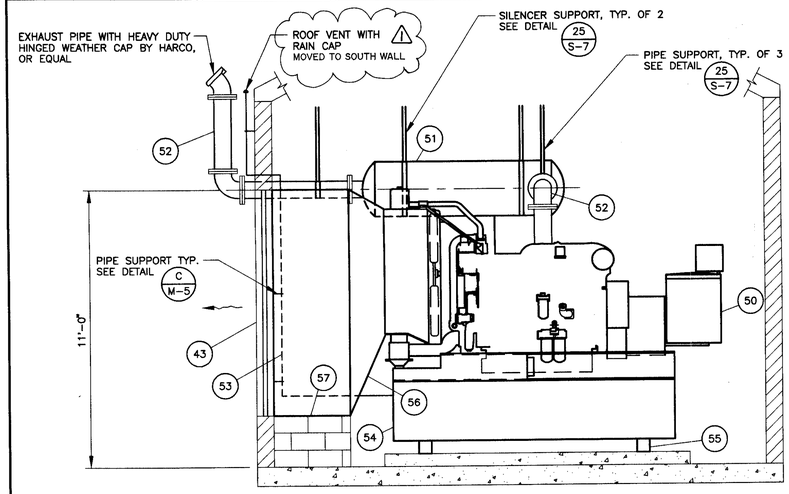

SECTION 1/M-1

SCALE: 3/8" = 1'-0"

MATERIALS LIST

43	6'-0" X 9'-0" EXHAUST LOUVER.
50	STANDBY DIESEL ENGINE GENERATOR SET.
51	SUPER CRITICAL EXHAUST SILENCER.
52	8" SCHEDULE 40 STEEL EXHAUST PIPING.
53	1 1/4" BLACK STEEL SCHEDULE 40 DIESEL FUEL VENT PIPING.
54	SUB-BASE DIESEL FUEL TANK.
55	SEISMIC VIBRATION ISOLATORS.
56	GENERATOR AIR EXHAUST DUCT.
57	SOUND ATTENUATOR PER SPECIFICATION SECTION 10200.

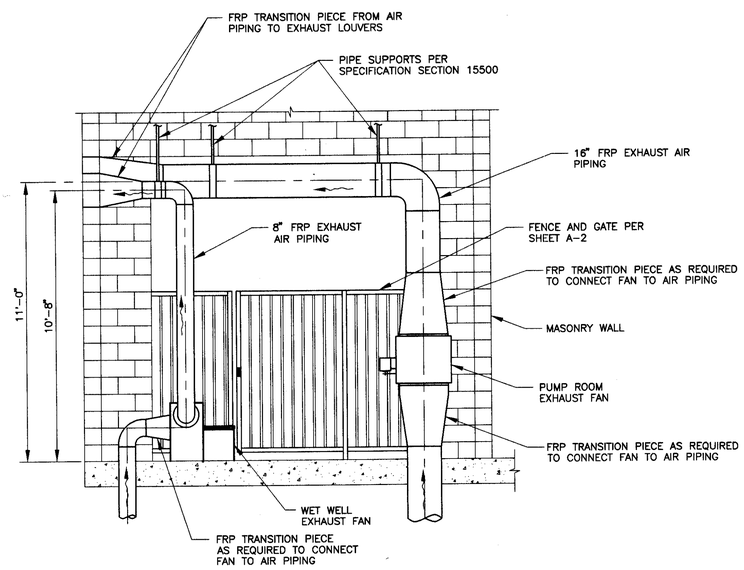

SECTION 2/M-1

SCALE: 3/8" = 1'-0"

NOTE: FAN DISCHARGE PIPING SHALL BE SUPPORTED SUCH THAT FAN CAN BE EASILY REMOVED AND REINSTALLED. CONTRACTOR SHALL SUBMIT TO ENGINEER FOR APPROVAL THE PROPOSED METHOD OF SUPPORTING FANS AND DISCHARGE PIPING.

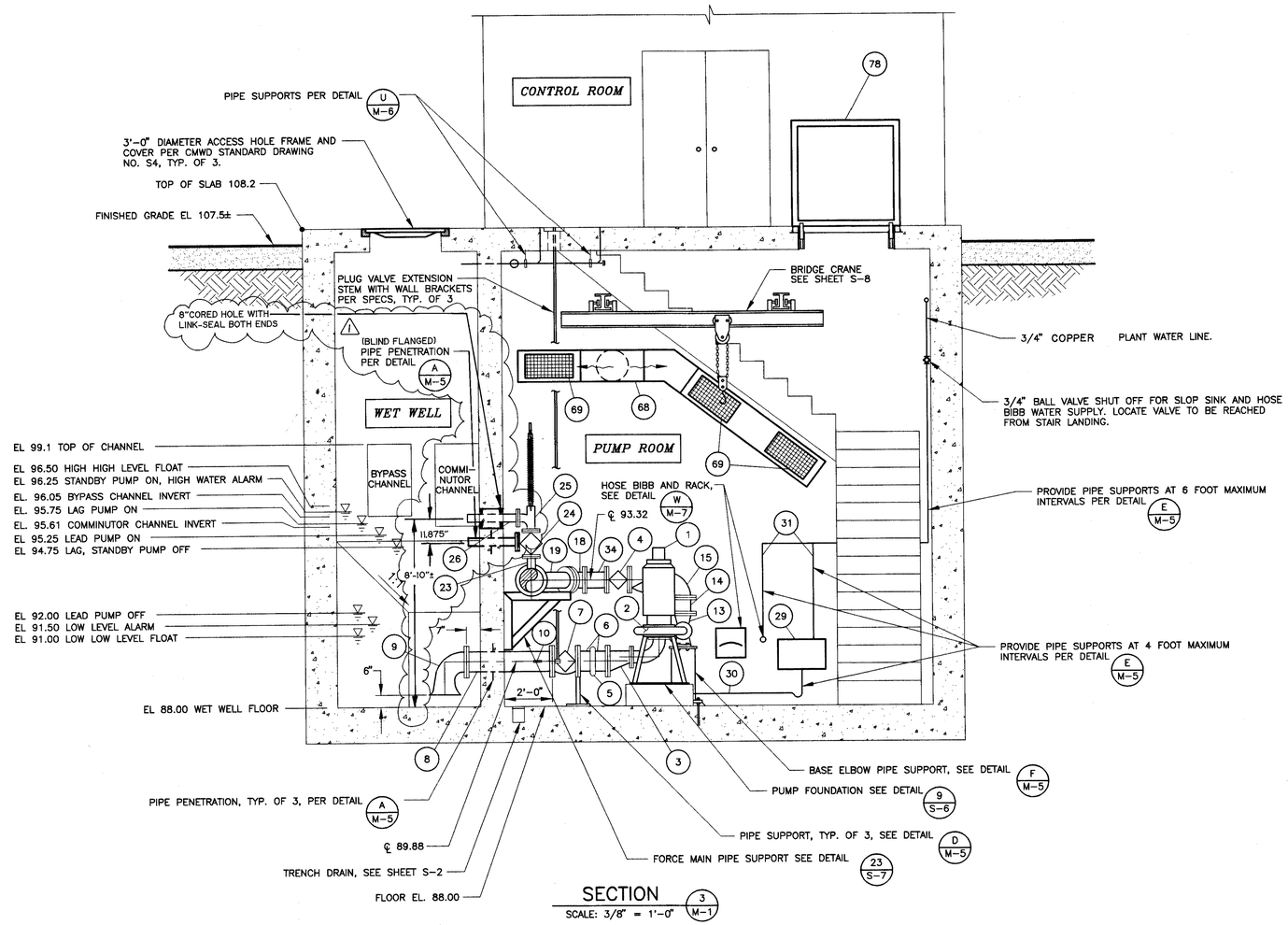

SECTION 3/M-1

SCALE: 3/8" = 1'-0"

MATERIALS LIST

1	125 HP DRY PIT SUBMERSIBLE MOTOR, TYPICAL OF 3.
2	MAIN SEWAGE PUMP, TYPICAL OF 3.
3	10" X SIZE TO FIT SELECTED PUMP SUCTION, FLANGED, DUCTILE IRON PIPE ECCENTRIC REDUCER, TYPICAL OF 3.
4	8" FLANGED PLUG VALVE WITH HANDWHEEL OPERATOR, TYPICAL OF 3.
5	10" STYLE 31 VICTAULIC COUPLING, TYPICAL OF 2.
6	10" FLANGED BY GROOVED END DUCTILE IRON PIPE SPOOL, TYPICAL OF 6.
7	10" FLANGED PLUG VALVE WITH EXTENSION STEM, TYPICAL OF 3.
8	10" FLANGED DUCTILE IRON PIPE SPOOL WITH WALL COLLAR, TYPICAL OF 3.
9	10" FLANGED X FLARED DUCTILE IRON PIPE SHORT RADIUS 90 DEGREE ELBOW, TYPICAL OF 3.
10	3/4" THREADED TAP AND PRESSURE GAUGE, TYPICAL OF 6, SEE DETAIL H SHEET M-5.
13	SIZE TO FIT SELECTED PUMP DISCHARGE X 8" FLANGED DUCTILE IRON PIPE 90 DEGREE INCREASING BASE ELBOW, TYPICAL OF 3.
14	8" FLANGED DUCTILE IRON PIPE SPOOL, TYPICAL OF 3.
15	8" FLANGED DUCTILE IRON PIPE 90 DEGREE BEND, TYPICAL OF 3.
18	8" FLANGED DUCTILE IRON PIPE 45 DEGREE BEND, TYPICAL OF 2.
19	12" X 12" X 8" FLANGED DUCTILE IRON PIPE WYE, TYPICAL OF 2.
23	12" X 12" X 4" FLANGED DUCTILE IRON PIPE TEE.
24	4" FLANGED PLUG VALVE WITH HANDWHEEL OPERATOR.
25	4" FLANGED ANGLE SURGE RELIEF VALVE.
26	4" FLANGED X PLAIN END DUCTILE IRON PIPE SPOOL WITH WALL COLLAR.
29	WALL MOUNTED UTILITY SINK AND FAUCET, FIBERGLASS REINFORCED PLASTIC, RUST AND CORROSION RESISTANT, 20 GALLON MINIMUM CAPACITY.
30	2" ABS UTILITY SINK DRAIN PIPE, ROUTE TO SUMP AT MINIMUM 2 PERCENT SLOPE.
31	3/4" COPPER PLANT WATER SUPPLY LINE.
34	8" FLANGED DUCTILE IRON PIPE SPOOL, LENGTH AS REQUIRED, TYPICAL OF 3.
68	16" X 10" PUMP ROOM SUPPLY AIR DUCT.
69	12" X 24" DOUBLE DEFLECTION SUPPLY AIR REGISTERS, TYPICAL OF 3, KRUEGER MODEL 880VOBD, OR EQUAL.
78	4'-0" X 4'-0" EQUIPMENT ACCESS HATCH, SINGLE LEAF ALUMINUM CHECKER PLATE, SPRING ASSISTED, HINGED COVER WITH RECESSED LOCKING HASP, BILCO, DUR-RED, NYSTROM, OR EQUAL. HATCH SHALL OPEN TOWARD EAST.

REGISTERED PROFESSIONAL ENGINEER DEXTER S. WILSON No. 15842 EXP. 12/30/98 CIVIL STATE OF CALIFORNIA

PLANS PREPARED BY
WILSON ENGINEERING
CONSULTING ENGINEERS
703 PALOMAR AIRPORT ROAD, SUITE 300
CARLSBAD, CA 92009 (619) 438-4422

DEXTER S. WILSON — DATE 6-16-97

DISTRICT APPROVED CHANGES

No.	Description	Approved	Date
1	AS-BUILT		

BENCH MARK
Description SEE TITLE SHEET
Location
Record From
Elevation Datum

M-3

CARLSBAD MUNICIPAL WATER DISTRICT

SHEET	ENGINEERING DEPARTMENT	48 SHEETS
31		

PLANS FOR THE IMPROVEMENT OF:

MECHANICAL SECTIONS 1
POINSETTIA SEWAGE LIFT STATION

District Engineer WILLIAM E. PLUMMER 28176 RCE — Date 6-23-97
REGISTRATION EXPIRES 3-31-98

Drawn PP
Checked AO
CMWD 95-402

PD 411

331-1E
31 of 48
062000

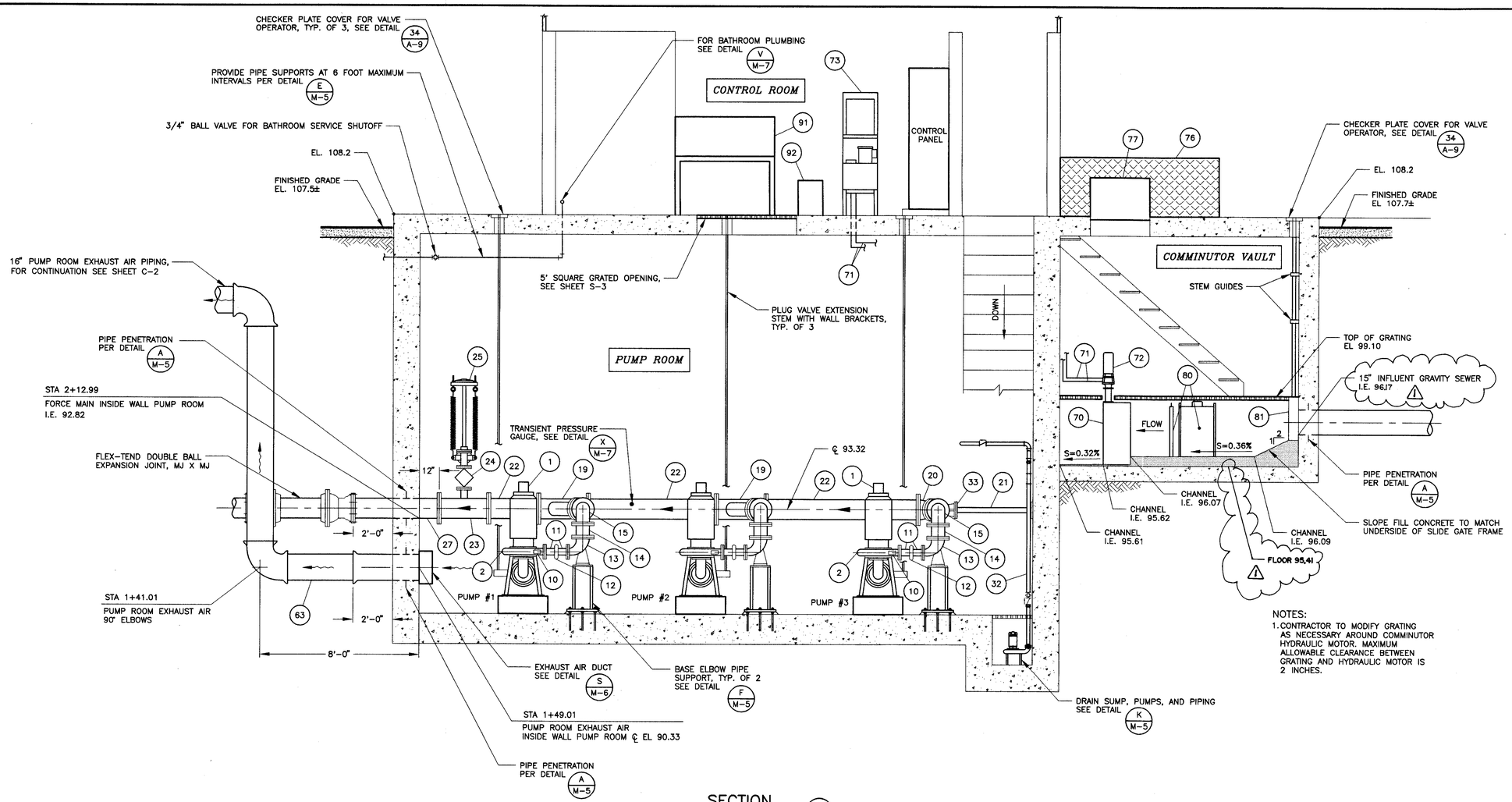

NOTES:

1. CONTRACTOR TO MODIFY GRATING AS NECESSARY AROUND COMMINUTOR HYDRAULIC MOTOR. MAXIMUM ALLOWABLE CLEARANCE BETWEEN GRATING AND HYDRAULIC MOTOR IS 2 INCHES.

SECTION 4/M-2

SCALE: 3/8" = 1'-0"

MATERIALS LIST

1. 125 HP DRY PIT SUBMERSIBLE MOTOR, TYPICAL OF 3.
2. MAIN SEWAGE PUMP, TYPICAL OF 3.
10. 3/4" THREADED TAP AND PRESSURE GAUGE, TYPICAL OF 6, SEE DETAIL H SHEET M-5.
11. FLANGED BY GROOVED END DUCTILE IRON PIPE SPOOL, SIZE TO MATCH PUMP DISCHARGE, TYPICAL OF 6.
12. STYLE 31 VICTAULIC COUPLING, SIZE TO MATCH PUMP DISCHARGE, TYPICAL OF 3.
13. SIZE TO FIT SELECTED PUMP DISCHARGE X 8" FLANGED DUCTILE IRON PIPE 90 DEGREE INCREASING BASE ELBOW, TYPICAL OF 3.
14. 8" FLANGED DUCTILE IRON PIPE SPOOL, TYPICAL OF 3.
15. 8" FLANGED DUCTILE IRON PIPE 90 DEGREE BEND, TYPICAL OF 3.
19. 12" X 12" X 8" FLANGED DUCTILE IRON PIPE WYE, TYPICAL OF 2.
20. 12" X 8" FLANGED DUCTILE IRON PIPE 90 DEGREE BASE ELBOW.
21. 3" SCHEDULE 80 STEEL PIPE, FLANGED X PLAIN END, FIELD WELD PLAIN END TO BLIND FLANGE. ANCHOR FLANGED END IN PUMP ROOM WALL, EMBED 4" MIN.
22. 12" FLANGED DUCTILE IRON PIPE SPOOL, TYPICAL OF 3, LENGTH AS REQUIRED.
23. 12" X 12" X 4" FLANGED DUCTILE IRON PIPE TEE.
24. 4" FLANGED PLUG VALVE WITH HANDWHEEL OPERATOR.
25. 4" FLANGED ANGLE SURGE RELIEF VALVE.
27. 12" FLANGED X PLAIN END DUCTILE IRON PIPE SPOOL WITH WALL COLLAR.
32. 2" SCHEDULE 80 PVC SUMP PUMP DISCHARGE PIPE.
33. STEEL BLIND FLANGE, CLASS F.
63. 16" PUMP ROOM EXHAUST AIR PIPING.
70. HYDRAULICALLY DRIVEN COMMINUTOR.
71. 3/4" STAINLESS STEEL HYDRAULIC SUPPLY AND RETURN LINES, ROUTE BETWEEN HYDRAULIC POWER UNIT AND COMMINUTOR HYDRAULIC MOTOR TO BEST SUIT FIELD CONDITIONS. SUPPORT AT 6 FOOT INTERVALS MAXIMUM PER DETAIL 'C' SHEET M-5.
72. COMMINUTOR HYDRAULIC MOTOR.
73. HYDRAULIC POWER UNIT AND CONTROL PANEL FOR COMMINUTOR. PROVIDE ON STAND SUPPLIED BY MANUFACTURER.
76. 3'-0" X 8'-0" COMMINUTOR VAULT ACCESS HATCH, ALUMINUM CHECKER PLATE, SPRING ASSISTED, HINGED COVER WITH RECESSED LOCKING HASP, BILCO, DUR-RED, NYSTROM, OR EQUAL.
77. 2'-0" X 3'-0" SINGLE LEAF HATCH, ALUMINUM CHECKER PLATE, SPRING ASSISTED, HINGED COVER WITH RECESSED LOCKING HASP, BILCO, DUR-RED, NYSTROM, OR EQUAL.
80. 316 STAINLESS STEEL STOP GATE, WATERMAN OR EQUAL, SEE SPECIFICATION SECTION 15100, TYPICAL OF 2.
81. STAINLESS STEEL SLIDE GATE, WALL MOUNTED, WITH RISING STEM AND 2" OPERATING NUT, SEE SPECIFICATION SECTION 15100.
91. PROVIDE 60" X 30" ELECTRICALLY WIRED ADJUSTABLE HEIGHT WORK STATION WITH OPTIONAL INSTRUMENT SHELF, MCMASTER CARR NO. 9088T21, OR EQUAL
92. CABINET DEHUMIDIFIER WITH 5 GAL/DAY CAPACITY, MCMASTER CARR NO. 2149K22, OR EQUAL.

REGISTERED PROFESSIONAL ENGINEER DEXTER S. WILSON No. 13692 Exp. 6/30/98 CIVIL STATE OF CALIFORNIA

PLANS PREPARED BY
WILSON ENGINEERING
CONSULTING ENGINEERS
703 PALOMAR AIRPORT ROAD, SUITE 300
CARLSBAD, CA 92009 (619) 438-4422

DEXTER S. WILSON 6-16-97 DATE

DISTRICT APPROVED CHANGES			
No.	Description	Approved	Date
1	AS-BUILT		

BENCH MARK
Description SEE TITLE SHEET
Location
Record From
Elevation Datum

M-4

CARLSBAD MUNICIPAL WATER DISTRICT

SHEET		
32	ENGINEERING DEPARTMENT	48 SHEETS

PLANS FOR THE IMPROVEMENT OF:

MECHANICAL SECTIONS 2

POINSETTIA SEWAGE LIFT STATION

William E. Plummer 28176 6-23-97
District Engineer WILLIAM E. PLUMMER RCE Date
REGISTRATION EXPIRES 3-31-98

Drawn PP
Checked AO
CMWD 95-402

331-1E
32 of 48
002200

PD 411

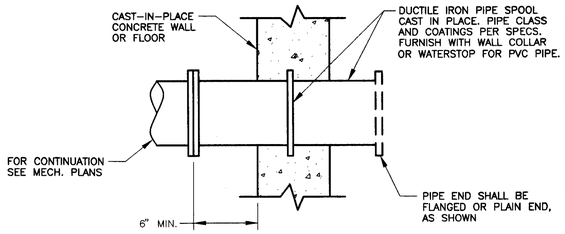

NOTE: SEE STRUCTURAL DRAWINGS FOR REINFORCING AT OPENING

WALL/FLOOR PENETRATION DETAIL (A VAR)

NTS

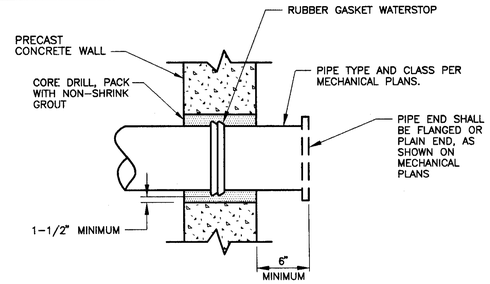

PRECAST CONCRETE PIPE PENETRATION DETAIL (B VAR)

NTS

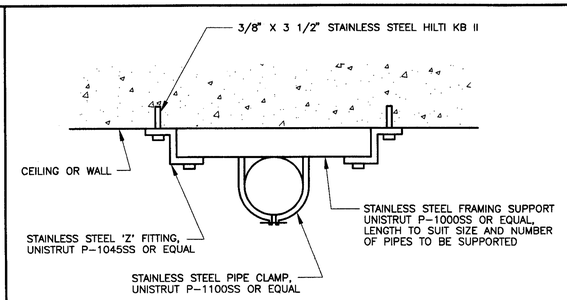

FLUSH MOUNT CHANNEL PIPE SUPPORT FOR PIPE SIZE 4" AND SMALLER (C VAR)

NTS

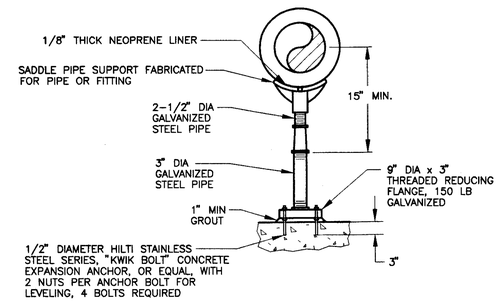

PIPE/VALVE SUPPORT SADDLE (D VAR)

NTS

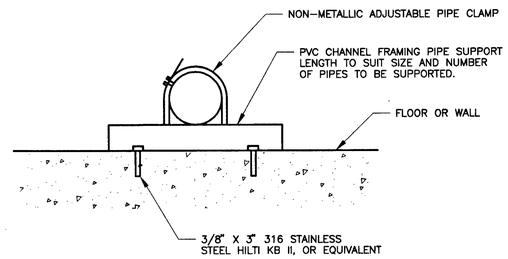

FLUSH MOUNT PVC CHANNEL PIPE SUPPORT (E VAR)

NTS

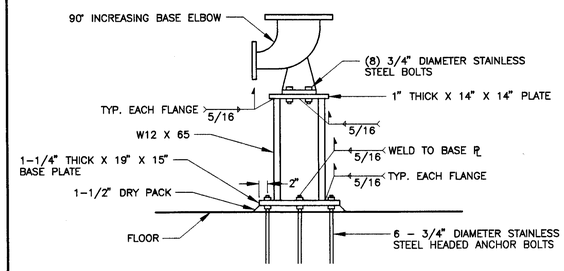

BASE ELBOW SUPPORT DETAIL (F VAR)

NTS

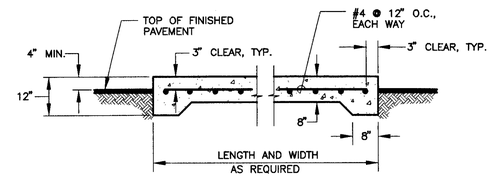

NOTES: 1. CONCRETE SHALL BE 560-C-3250 PER GREEN BOOK.

2. PROVIDE 1/4" EXPANSION MATERIAL BETWEEN EQUIPMENT PAD AND ADJACENT STRUCTURES.

EQUIPMENT PAD DETAIL (G VAR)

NTS

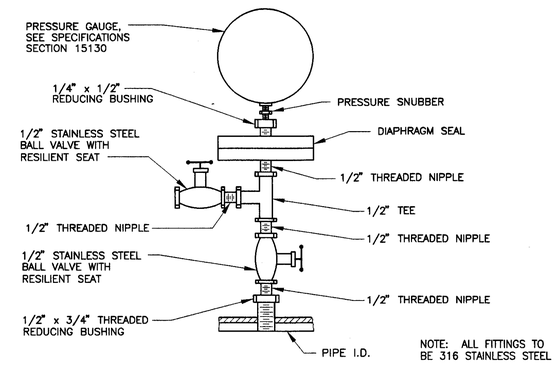

NOTE: ALL FITTINGS TO BE 316 STAINLESS STEEL

PRESSURE GAUGE WITH DIAPHRAGM SEAL (H VAR)

NTS

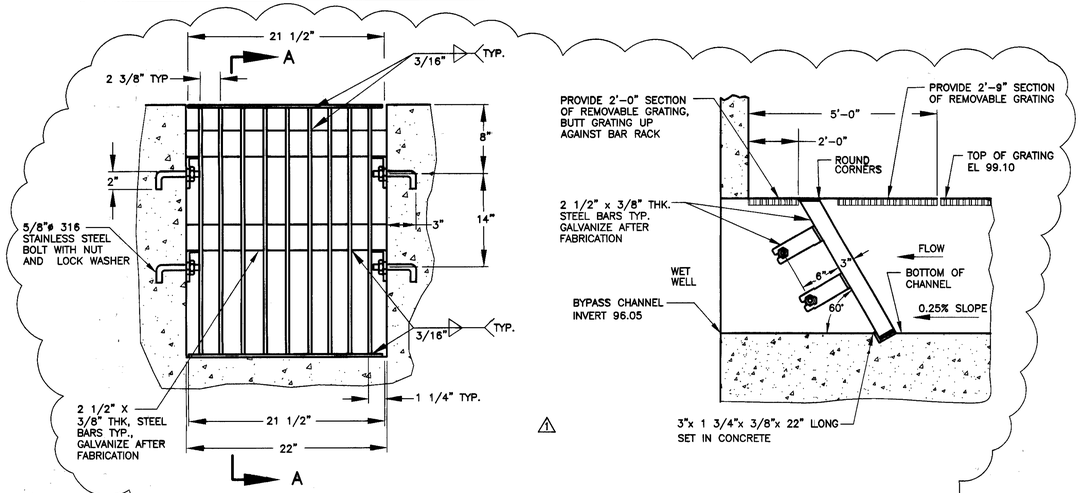

BAR RACK DETAIL (J M-2)

NTS

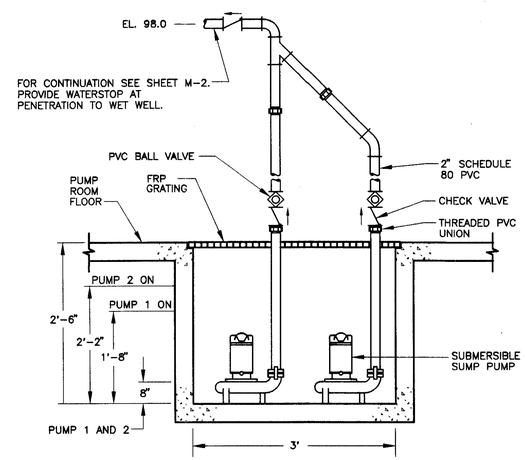

NOTES: 1. SUPPORT SUMP PUMP DISCHARGE PIPING AT 4 FOOT MAXIMUM INTERVALS PER DETAIL (C M-5)

SUMP PUMPS (K M-2)

NTS

M-5

CARLSBAD MUNICIPAL WATER DISTRICT

SHEET 33	ENGINEERING DEPARTMENT	48 SHEETS

PLANS FOR THE IMPROVEMENT OF:

MECHANICAL DETAILS 1

POINSETTIA SEWAGE LIFT STATION

William E. Plummer 28176 6-23-97
District Engineer WILLIAM E. PLUMMER RCE Date
REGISTRATION EXPIRES 3-31-98

Drawn PP
Checked AO
CMWD 95-402

REGISTERED PROFESSIONAL ENGINEER DEXTER S. WILSON No. 13097 EXP. 6/30/98 CIVIL STATE OF CALIFORNIA

PLANS PREPARED BY
WILSON ENGINEERING
CONSULTING ENGINEERS
703 PALOMAR AIRPORT ROAD, SUITE 300
CARLSBAD, CA 92009 (619) 438-4422
DEXTER S. WILSON 6-16-97 DATE

DISTRICT APPROVED CHANGES

No.	Description	Approved	Date
1	AS - BUILT		

BENCH MARK
Description SEE TITLE SHEET
Location
Record From
Elevation Datum

33/-1E
33 07 48
062000

PD 411

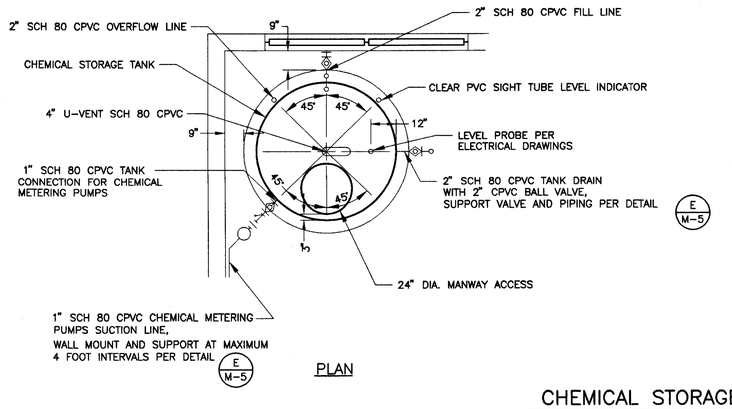

PLAN

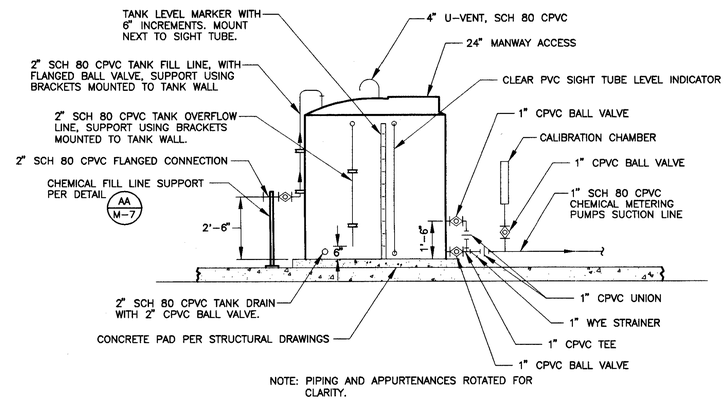

NOTE: PIPING AND APPURTENANCES ROTATED FOR CLARITY.

ELEVATION

CHEMICAL STORAGE TANK DETAIL (M / M-1)

SCALE: 3/8" = 1'-0"

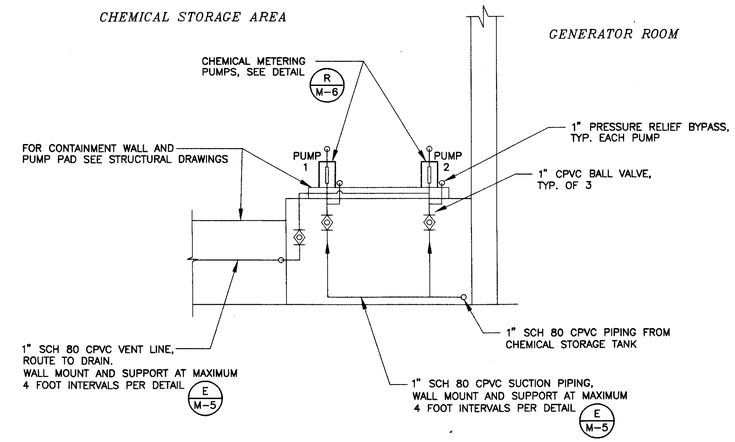

CHEMICAL METERING PUMP SUCTION AND VENT PIPING (N / M-1)

NTS

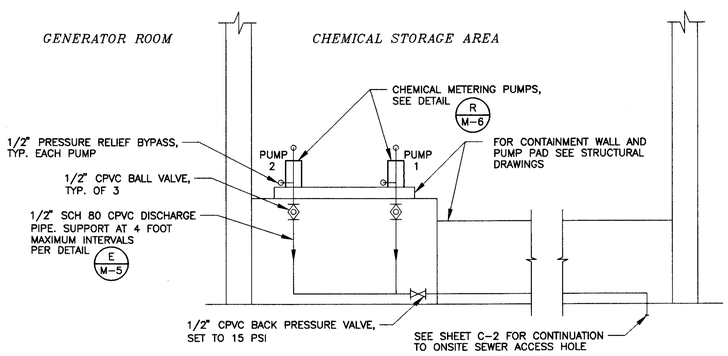

CHEMICAL METERING PUMP DISCHARGE PIPING (P / M-1)

NTS

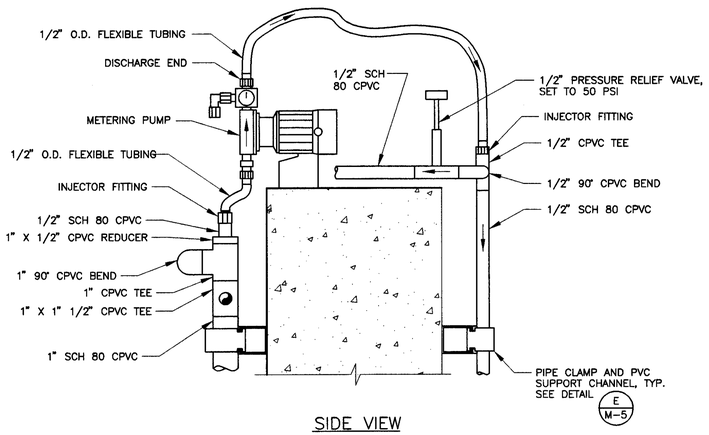

SIDE VIEW

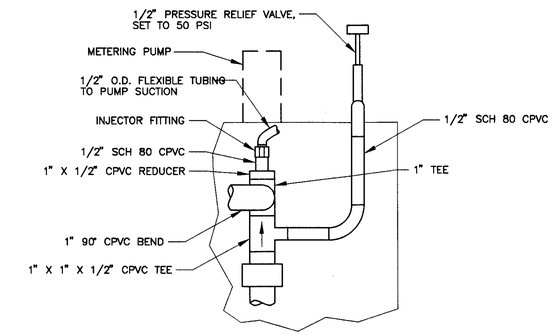

SUCTION PIPING

METERING PUMP DETAIL (R / VAR)

NTS

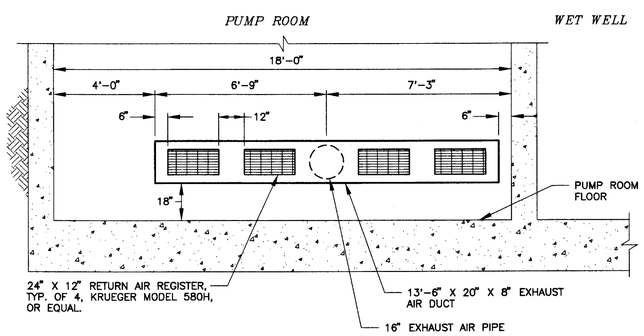

PUMP ROOM EXHAUST AIR DUCT DETAIL (S / VAR)

SCALE: 3/8" = 1'-0"

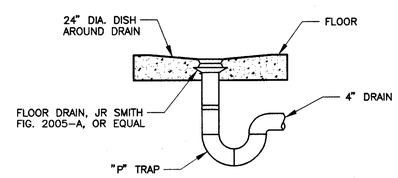

FLOOR DRAIN DETAIL (T / VAR)

NTS

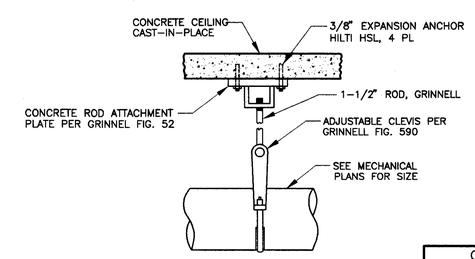

PIPE SUPPORT DETAIL (U / VAR)

NTS

REGISTERED PROFESSIONAL ENGINEER DEXTER S. WILSON 20198 CIVIL STATE OF CALIFORNIA 6/30/98

PLANS PREPARED BY
WILSON ENGINEERING
CONSULTING ENGINEERS
703 PALOMAR AIRPORT ROAD, SUITE 300
CARLSBAD, CA 92009 (619) 438-4422

DEXTER S. WILSON — DATE 6-16-97

DISTRICT APPROVED CHANGES			
No.	Description	Approved	Date
1	AS-BUILT		

BENCH MARK
Description SEE TITLE SHEET
Location
Record From
Elevation — Datum

M-6

CARLSBAD MUNICIPAL WATER DISTRICT

SHEET	ENGINEERING DEPARTMENT	SHEETS
34		48

PLANS FOR THE IMPROVEMENT OF:

MECHANICAL DETAILS 2

POINSETTIA SEWAGE LIFT STATION

District Engineer WILLIAM E. PLUMMER 28176 RCE — Date 6-23-97
REGISTRATION EXPIRES 3-31-98

Drawn PP
Checked AO

CMWD 95-402

331-1E
34 of 48
062000

PD 411

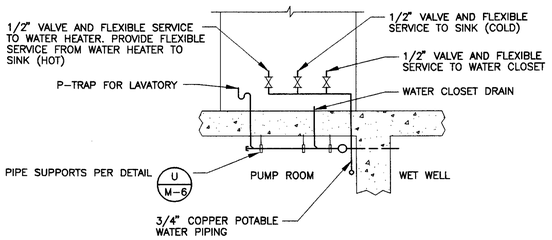

NOTES: 1. ALL PIPING SHALL BE IN CONFORMANCE WITH THE UNIFORM PLUMBING CODES, LATEST EDITION.
2. FLEXIBLE SERVICE SHALL BE MIN. 150 PSI RATED STAINLESS STEEL BRAIDED HOSE.

BATHROOM WEST WALL (V / M-1)

NTS

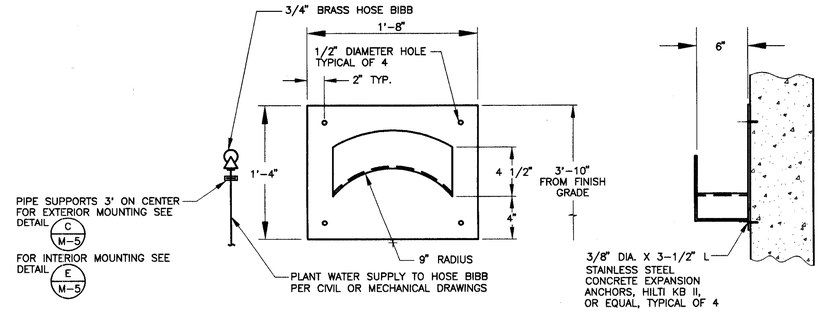

NOTES: 1. HOSE RACK SHALL BE OF ALL WELDED CONSTRUCTION. MATERIAL: 8 GAGE STEEL PLATE, HOT DIP GALVANIZED AFTER CONSTRUCTION.
2. ALL FASTENERS AND MOUNTING HARDWARE SHALL BE 316 STAINLESS STEEL.
3. RACK SHALL BE PAINTED PER [2] FINISH SCHEDULE ON SHEET A-3.

HOSE BIBB AND RACK (W / VAR)

NTS

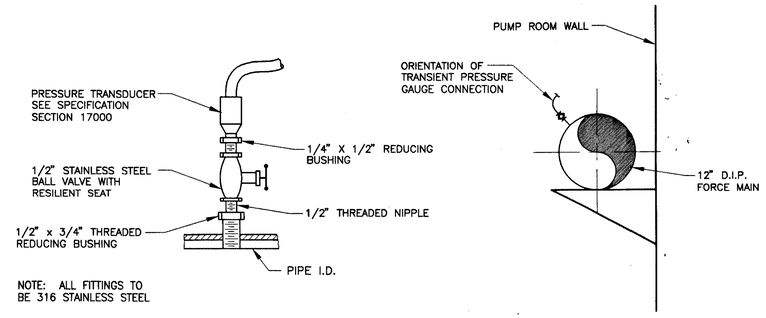

NOTE: ALL FITTINGS TO BE 316 STAINLESS STEEL

TRANSIENT PRESSURE GAUGE CONNECTION (X / VAR)

NTS

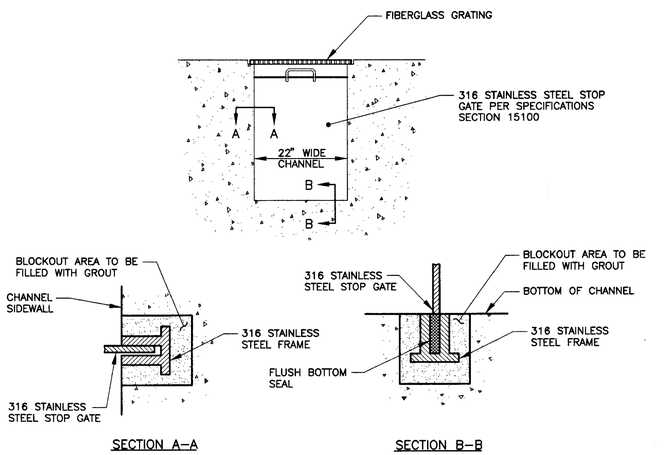

NOTE: BLOCKOUT SIZE TO BE DETERMINED BY THE STOP GATE SUPPLIER.

STOP GATE DETAIL (Y / M-2)

NTS

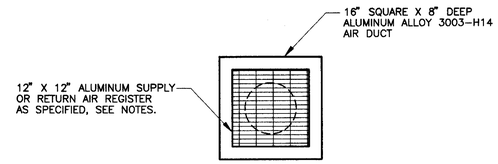

NOTES:
1. COMMINUTOR VAULT SUPPLY AIR REGISTER SHALL BE KREUGER DESIGN-AIR SERIES 5880V, OR EQUAL.
2. WET WELL RETURN AIR REGISTER SHALL BE KREUGER DESIGN-AIR SERIES S580VS, OR EQUAL.

AIR REGISTER DETAIL (Z / M-2)

NTS

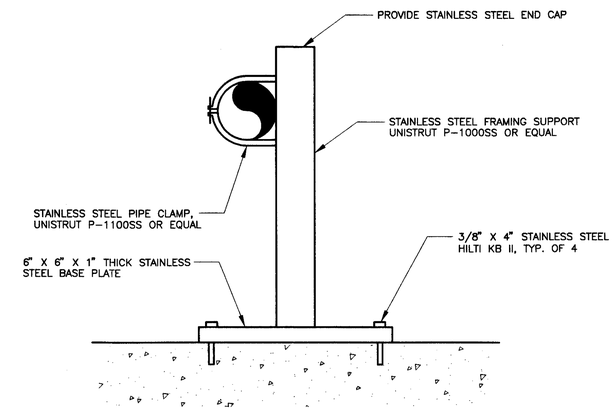

CHEMICAL FILL LINE SUPPORT (AA / M-6)

NTS

M-7

CARLSBAD MUNICIPAL WATER DISTRICT		
SHEET 35	ENGINEERING DEPARTMENT	48 SHEETS

PLANS FOR THE IMPROVEMENT OF:

MECHANICAL DETAILS 3

POINSETTIA SEWAGE LIFT STATION

REGISTERED PROFESSIONAL ENGINEER DEXTER S. WILSON No. 25644 EXP. 3/31/98 CIVIL STATE OF CALIFORNIA

PLANS PREPARED BY
WILSON ENGINEERING
CONSULTING ENGINEERS
703 PALOMAR AIRPORT ROAD, SUITE 300
CARLSBAD, CA 92009 (619) 438-4422
DEXTER S. WILSON 6-16-97 DATE

DISTRICT APPROVED CHANGES

No.	Description	Approved	Date
1	AS-BUILT		

BENCH MARK
Description SEE TITLE SHEET
Location
Record From
Elevation Datum

District Engineer WILLIAM E. PLUMMER 28176 RCE 6-23-97 Date
REGISTRATION EXPIRES 3-31-98
Drawn PP
Checked AO
CMWD 95-402

PD 411

331-1E
35 of 48
062000

CONDUIT PLAN	SINGLE LINE DIAGRAM	SCHEMATIC DIAGRAM	DESCRIPTION
	100AF 50AT		CIRCUIT BREAKER. UPPER NUMBER IS FRAME SIZE. LOWER NUMBER IS TRIP RATING
			THREE POSITION SWITCH. MAINTAINED CONTACT FUNCTION MAY VARY AS NOTED ON DIAGRAMS. CENTER POSITION IS OFF
			TWO POSITION SWITCH. MAINTAINED CONTACT FUNCTION MAY VARY AS NOTED ON DIAGRAMS
			MOMENTARY CONTACT PUSHBUTTON. FUNCTION MAY VARY AS NOTED ON DIAGRAMS
LOS		LOS	MOMENTARY CONTACT PUSHBUTTON WITH PROVISION FOR LOCKOUT.
			LOCKABLE DISCONNECT SWITCH. RATING AND DETAILS AS NOTED ON DRAWINGS.
ZS			LIMIT SWITCH. NORMALLY OPEN
ZS			LIMIT SWITCH. NORMALLY CLOSED
		NOTO	TIME DELAY RELAY CONTACT. OFF DELAY, NORMALLY OPEN, TIME OPEN
		NCTC	TIME DELAY RELAY CONTACT. OFF DELAY, NORMALLY CLOSED, TIME CLOSED
		NOTC	TIME DELAY RELAY CONTACT. ON DELAY, NORMALLY OPEN, TIME CLOSED
		NCTO	TIME DELAY RELAY CONTACT. ON DELAY, NORMALLY CLOSED, TIME OPEN
SOV			SOLENOID OPERATED VALVE
			MOTOR CONTROL CENTER DRAWOUT STABS
	2		MOTOR STARTER WITH THERMAL OVERLOADS. NUMBER INDICATES NEMA SIZE
		OL	MOTOR OVERLOAD CONTACT
2	2	2	MOTOR, NUMBER INDICATES HORSEPOWER
			INDICATING LIGHT, PUSH-TO-TEST. LETTER INDICATES COLOR. R=RED B=BLUE G=GREEN A=AMBER W=WHITE
		M	CONTACTOR OR RELAY COIL. LETTER OR NUMBER IS DESIGNATION
		M	NORMALLY CLOSED CONTACT. LETTER OR NUMBER IS DESIGNATION
		M	NORMALLY OPEN CONTACT. LETTER OR NUMBER IS DESIGNATION
		RTM	RUNNING TIME METER, NON-RESETTABLE
	20A	5A	FUSE, NUMBER INDICATES RATING
			CONTROL TRANSFORMER. RATING AS NOTED ON DRAWINGS OR AS REQUIRED BASED ON LOAD SERVED.
	A		AMMETER
	AS		AMMETER SWITCH
XXX	XXX		CONDUIT NUMBER 'XXX' IN CONDUIT SCHEDULE

CONDUIT PLAN	SINGLE LINE DIAGRAM	SCHEMATIC DIAGRAM	DESCRIPTION
	KW		KILOWATT METER
PS			PRESSURE SWITCH. CONTACT ACTION AS NOTED ON DRAWINGS
T			POWER TRANSFORMER. RATINGS AS NOTED ON DRAWINGS
			DUPLEX RECEPTACLE. 20A, SPEC GRADE GROUNDING TYPE. UNLESS OTHERWISE NOTED ON DRAWINGS.
			TELEPHONE OUTLET
			JUNCTION BOX OR CONDUIT FITTING AS NOTED OR REQUIRED. (SHOWN WITH CONDUIT TURNING UP)
LS			LEVEL SWITCH, CONTACT ACTION AS NOTED ON DRAWINGS
			CONTROL PANEL OR EQUIPMENT AS NOTED
FS			FLOW SWITCH, CONTACT ACTION AS NOTED ON DRAWINGS
$			FLUSH TOGGLE SWITCH, SINGLE POLE, SINGLE THROW
$3			FLUSH TOGGLE SWITCH, THREE WAY
			FLUORESCENT FIXTURE. SEE LIGHTING SCHEDULE.
			LIGHTING FIXTURE, WALL MOUNTED SEE LIGHTING SCHEDULE
PB			MH-MANHOLE PB-PULLBOX HH-HANDHOLE OR AS NOTED ON DRAWINGS
—T—			TELEPHONE CONDUIT. SIZE AS NOTED
—G—			GROUNDING GRID OR GROUNDING CONDUCTOR SIZE AS REQUIRED OR AS NOTED ON DRAWINGS
—G			GROUND PIGTAIL. SIZE AS NOTED ON DRAWINGS
G—			EXOTHERMIC GROUND CONNECTION
—G			BOLTED GROUND CONNECTION
			CONDUIT BENDING UP
			CONDUIT BENDING DOWN
			UNDERGROUND OR CONCEALED CONDUIT
			EXPOSED CONDUIT.
PB1 1,3,5			HOMERUN CONDUIT WITH 3 CONDUCTORS, NEUTRAL AND GROUND, CIRCUITS 1,3,5 PANEL PB1
$M X		M	MANUAL MOTOR STARTER, X - DESIGNATES NUMBER OF POLES. NO DESIGNATION INDICATES SINGLE POLE.
$K		K	KEY OPERATED SWITCH
		T	TELEMETRY INPUT POINT

CONDUIT PLAN	SINGLE LINE DIAGRAM	SCHEMATIC DIAGRAM	DESCRIPTION
			DRIVEN GROUND ROD - 3/4" X 10' Cu CLAD STEEL
			DRIVEN GROUND ROD AND GROUND ROD TEST WELL
			PANELBOARD OR AS NOTED ON DRAWING
			LIQUIDTIGHT FLEXIBLE CONDUIT
			GROUND
			HEATER, RATING AS NOTED ON DRAWING
			HORN OR AUDIBLE SIGNAL
		A	ANNUNCIATOR ALARM WINDOW
Ø	Ø	Ø	PHASE
			TERMINAL, INTERNAL WIRING
			TERMINAL, FIELD WIRING
DS			MAGNETIC DOOR SWITCH
			CONDUIT STUB OUT
F XX	/XX		DISCONNECT SWITCH, F = FUSED NF = NON-FUSED XX = AMP RATING

DRAWING SCHEDULE

DRAWING	TITLE
E-1	ELECTRICAL SYMBOLS AND ABBREVIATIONS
E-2	ELECTRICAL SITE PLAN
E-3	GRADE LEVEL POWER/SIGNAL PLAN
E-4	GRADE LEVEL LIGHTING PLAN
E-5	PUMP ROOM POWER/SIGNAL PLAN
E-6	PUMP ROOM LIGHTING PLAN
E-7	SINGLE LINE DIAGRAM & ELEVATIONS
E-8	CONTROL DETAILS
E-9	DETAILS / CONTROL DIAGRAMS 1
E-10	CONTROL DIAGRAMS 2
E-11	CONTROL DIAGRAMS 3
E-12	DETAILS
E-13	CONDUIT AND CABLE SCHEDULE

STANDARD ABBREVIATIONS

A	AMPERES	MAX	MAXIMUM
AC	ALTERNATING CURRENT	MC	MAINTAINED CONTACT
AF	AMPERE FRAME	MCC	MOTOR CONTROL CENTER
AFC	ABOVE FINISHED CONCRETE	MCM	THOUSAND CIRCULAR MILS
AFF	ABOVE FINISHED FLOOR	MCP	MOTOR CIRCUIT PROTECTOR
AFG	ABOVE FINISHED GRADE	MH	MANHOLE
AT	AMPERE TRIP	MIN	MINIMUM OR MINUTE
ATS	AUTOMATIC TRANSFER SWITCH	MLO	MAIN LUGS ONLY
AUX	AUXILIARY	MOV	MOTOR OPERATED VALVE ACTUATOR
AUTO	AUTOMATIC	MTG	MOUNTING
AWG	AMERICAN WIRE GAUGE	MTR	MOTOR
BC	BARE COPPER	N	NEUTRAL
BD	BOARD	NA	NON-AUTOMATIC
BKR	BREAKER	NC	NORMALLY CLOSED
C	CONDUIT	NCIO	NORMALLY CLOSED, INSTANTANEOUS OPEN
CAB	CABINET	NCTC	NORMALLY CLOSED, TIME CLOSE
CB	CIRCUIT BREAKER	NCTO	NORMALLY CLOSE, TIME OPEN
CKT	CIRCUIT	NEC	NATIONAL ELECTRIC CODE
CLG	CEILING	NIC	NOT IN CONTRACT
C.O.	CONDUIT ONLY	No	NUMBER
COMPT	COMPARTMENT	NO	NORMALLY OPEN
COND	CONDUCTOR	NOIC	NORMALLY OPEN, INSTANTANEOUS CLOSE
CONT	CONTROL	NOTC	NORMALLY OPEN, TIME CLOSE
CONTD	CONTINUED	NOTO	NORMALLY OPEN, TIME OPEN
CPT	CONTROL POWER TRANSFORMER	NP	NAMEPLATE
CP	CONTROL PANEL	NTS	NOT TO SCALE
CT	CURRENT TRANSFORMER	OL	OVERLOAD
CU	COPPER	PB	PUSHBUTTON
CR	CONTROL RELAY	PB	PULLBOX
DC	DIRECT CURRENT	PC	PHOTOCELL
DISC	DISCONNECT	PFR	PHASE FAILURE RELAY
DISC SW	DISCONNECT SWITCH	PNL	PANEL
DPDT	DOUBLE POLE DOUBLE THROW	POS	POSITION
DPST	DOUBLE POLE SINGLE THROW	PR	PAIR
DWG	DRAWING	PRI	PRIMARY
DS	DOOR SWITCH	PS	PRESSURE SWITCH
EL.ELEV	ELEVATION	PT	POTENTIAL TRANSFORMER
EM	EMERGENCY	PVC	POLYVINYL CHLORIDE
EMT	ELECTRICAL METALLIC TUBING	PVC/RGS	PVC JACKETED RIGID GALVANIZED STEEL CONDUIT
EO	ELECTRICALLY OPERATED	RECEP	RECEPTACLE
EXIST	EXISTING	RGS	RIGID GALVANIZED STEEL CONDUIT
FBO	FURNISHED BY OWNER	SDG&E	SAN DIEGO GAS & ELECTRIC
FDR	FEEDER	SEC	SECONDARY
FIN	FINISHED	SEL	SELECTOR
FLA	FULL LOAD AMPS	SP	SPARE
FLEX	FLEXIBLE	SPEC	SPECIFICATION
FM	FLOW METER	SS	STAINLESS STEEL
FS	FLOW SWITCH	SPDT	SINGLE POLE DOUBLE THROW
FT OR '	FEET OR FOOT	SPST	SINGLE POLE SINGLE THROW
FT	FLOW TRANSMITTER	ST	SHUNT TRIP
FUT	FUTURE	STA	STATION
GALV	GALVANIZED	STL	STEEL
GD	GAS DETECTORS	STR	STARTER
GFI	GROUND FAULT INTERRUPTER	SV	SOLENOID VALVE
GFP	GROUND FAULT PROTECTION	SW	SWITCH
GND	GROUND	SWBD	SWITCHBOARD
HH	HANDHOLE	TB	TERMINAL BOX
HOA	HAND/OFF/AUTO	TEL	TELEPHONE
HTR	HEATER	TEMP	TEMPERATURE
IC	INTERRUPTING CURRENT	TERM	TERMINAL
IN OR "	INCHES OR INCH	TM	TELEMETRY
IND	INDICATING	TS	TEMPERATURE SWITCH
INST	INSTANTANEOUS	TW/SH	TWISTED SHIELDED
INSTR	INSTRUMENT	TYP	TYPICAL
INTLK	INTERLOCK	UNGND	UNDERGROUND
JB OR J	JUNCTION BOX, CONDULET OR FITTING AS REQUIRED BY NEC. UNLESS OTHERWISE NOTED	UON	UNLESS OTHERWISE NOTED
KW	KILOWATTS	V	VOLTS
LCL	LONG CONTINUOUS LOAD	W	WATTS
LCP	LOCAL CONTROL PANEL	W/	WITH
LEV	LEVEL	W/O	WITHOUT
LIM	LIMIT	WP	WEATHERPROOF
LR	LOCAL/REMOTE	XFMR	TRANSFORMER
LOS	LOCKOUT STOP STATION	XP	EXPLOSION PROOF
LS	LEVEL OR LIMIT SWITCH	ZS	POSITION SWITCH OR LIMIT SWITCH
LT	LIGHT	3W	THREE WIRE
LTG	LIGHTING	4W	FOUR WIRE
LV	LOW VOLTAGE		
MA	MILLIAMPERE		
MAINT	MAINTAINED		
MAN	MANUAL		

REGISTERED PROFESSIONAL ENGINEER JOSEPH M. MORAES No. E 10235 Exp. 6/30/99 ELECTRICAL STATE OF CALIFORNIA

MPA MORAES/PHAM & ASSOCIATES
CONSULTING ELECTRICAL & MECHANICAL ENGINEERS
5235 AVENIDA ENCINAS STE. G
CARLSBAD CA. 92008 (619) 431-7177

DISTRICT APPROVED CHANGES

No.	Description	Approved	Date
1	AS-BUILT		

BENCH MARK
Description SEE TITLE SHEET
Location
Record From
Elevation Datum

E-1

CARLSBAD MUNICIPAL WATER DISTRICT

SHEET 36	ENGINEERING DEPARTMENT	48 SHEETS

PLANS FOR THE IMPROVEMENT OF:

ELECTRICAL SYMBOLS AND ABBREVIATIONS

POINSETTIA SEWAGE LIFT STATION

William E. Plummer 28176 6-23-97
District Engineer WILLIAM E. PLUMMER RCE Date
REGISTRATION EXPIRES 3-31-98

Drawn IB
Checked JMM
CMWD 95-402

PD 411

C:\FILES\JOE\POINSETTIA\PSLS-E1, 16-JUN-97, 11:33

331-1E
36 of 48
002000

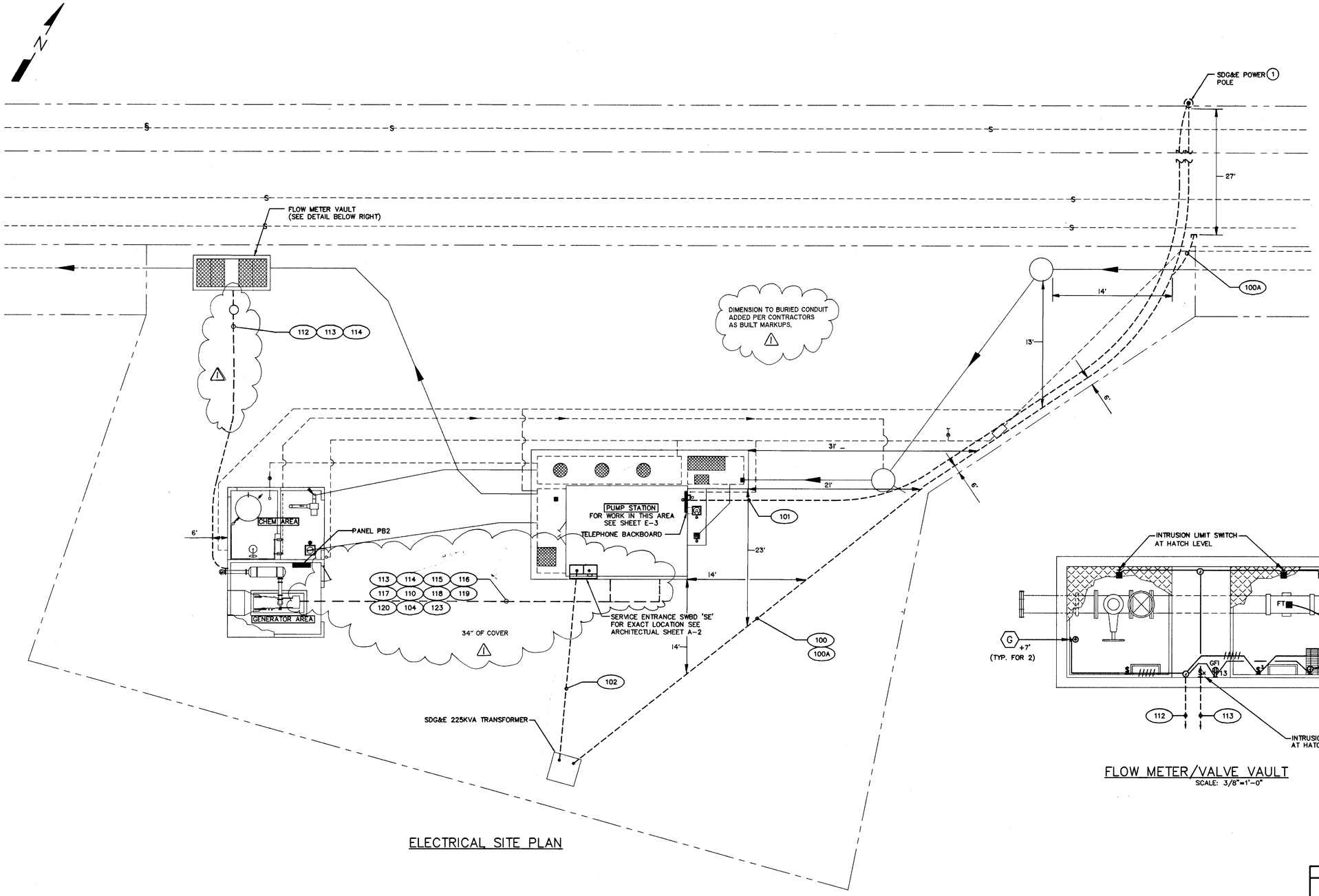

ELECTRICAL SITE PLAN

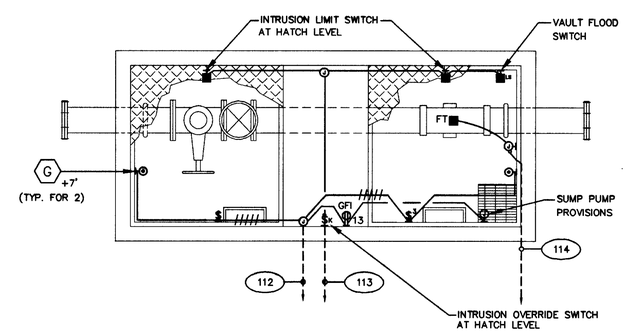

FLOW METER/VALVE VAULT
SCALE: 3/8"=1'-0"

NOTES

1. REFER TO SERVICE UTILITY DRAWINGS (SPECIFICATION APPENDIX B) FOR ACTUAL CONDUIT ROUTING AND CONNECTION.

GRAPHIC SCALE (FEET)

0 10 20 30

SCALE: 1"=10'

0 2 4 6

SCALE: 3/8"=1'-0"

REGISTERED PROFESSIONAL ENGINEER JOSEPH M. MORAES No. E10234 Exp. 6/30/99 ELECTRICAL STATE OF CALIFORNIA

MPA MORAES/PHAM & ASSOCIATES
CONSULTING ELECTRICAL & MECHANICAL ENGINEERS
5235 AVENIDA ENCINAS STE. G
CARLSBAD CA. 92008
(619) 431-7177

DISTRICT APPROVED CHANGES			
No.	Description	Approved	Date
1	AS- BUILT		

BENCH MARK
Description SEE TITLE SHEET
Location
Record From
Elevation Datum

E-2

CARLSBAD MUNICIPAL WATER DISTRICT

SHEET 37 | ENGINEERING DEPARTMENT | 48 SHEETS

PLANS FOR THE IMPROVEMENT OF:

ELECTRICAL SITE PLAN

POINSETTIA SEWAGE LIFT STATION

District Engineer WILLIAM E. PLUMMER 28176 RCE — Date 6-23-97
REGISTRATION EXPIRES 3-31-98

Drawn IB
Checked JMM

CMWD 95-402

C:\FILES\JOE\POINSETTIA\PSLS-E2, 16-JUN-97, 11:55 (FINAL)

331-1E
37 of 48
060000

PD 411

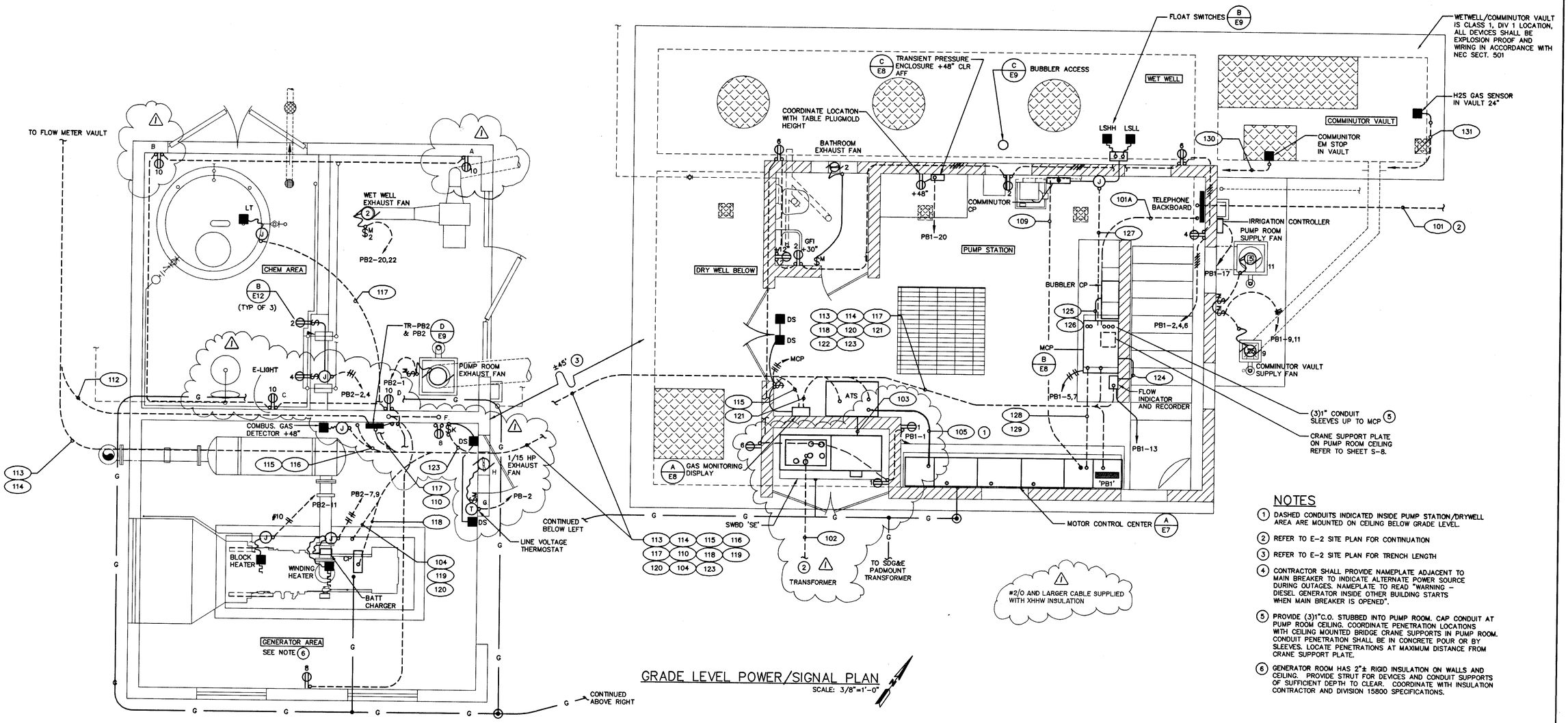

GRADE LEVEL POWER/SIGNAL PLAN

SCALE: 3/8"=1'-0"

NOTES

1. DASHED CONDUITS INDICATED INSIDE PUMP STATION/DRYWELL AREA ARE MOUNTED ON CEILING BELOW GRADE LEVEL.
2. REFER TO E-2 SITE PLAN FOR CONTINUATION
3. REFER TO E-2 SITE PLAN FOR TRENCH LENGTH
4. CONTRACTOR SHALL PROVIDE NAMEPLATE ADJACENT TO MAIN BREAKER TO INDICATE ALTERNATE POWER SOURCE DURING OUTAGES. NAMEPLATE TO READ "WARNING – DIESEL GENERATOR INSIDE OTHER BUILDING STARTS WHEN MAIN BREAKER IS OPENED".
5. PROVIDE (3)1"C.O. STUBBED INTO PUMP ROOM. CAP CONDUIT AT PUMP ROOM CEILING. COORDINATE PENETRATION LOCATIONS WITH CEILING MOUNTED BRIDGE CRANE SUPPORTS IN PUMP ROOM. CONDUIT PENETRATION SHALL BE IN CONCRETE POUR OR BY SLEEVES. LOCATE PENETRATIONS AT MAXIMUM DISTANCE FROM CRANE SUPPORT PLATE.
6. GENERATOR ROOM HAS 2"± RIGID INSULATION ON WALLS AND CEILING. PROVIDE STRUT FOR DEVICES AND CONDUIT SUPPORTS OF SUFFICIENT DEPTH TO CLEAR. COORDINATE WITH INSULATION CONTRACTOR AND DIVISION 15800 SPECIFICATIONS.

GRAPHIC SCALE (FEET)
0 2 4 6
SCALE: 3/8"=1'-0"

REGISTERED PROFESSIONAL ENGINEER JOSEPH M. MORAES No. E10235 Exp. 6/30/99 ELECTRICAL STATE OF CALIFORNIA

MPA MORAES/PHAM & ASSOCIATES
CONSULTING ELECTRICAL & MECHANICAL ENGINEERS
5235 AVENIDA ENCINAS STE. G
CARLSBAD CA. 92008
(619) 431-7177

DISTRICT APPROVED CHANGES			
No.	Description	Approved	Date
1	AS-BUILT		

BENCH MARK
Description SEE TITLE SHEET
Location
Record From
Elevation Datum

E-3

CARLSBAD MUNICIPAL WATER DISTRICT

SHEET 38 | ENGINEERING DEPARTMENT | 48 SHEETS

PLANS FOR THE IMPROVEMENT OF:

GRADE LEVEL POWER/ SIGNAL PLAN

POINSETTIA SEWAGE LIFT STATION

William E. Plummer 28176 RCE 6-23-97
District Engineer WILLIAM E. PLUMMER Date
REGISTRATION EXPIRES 3-31-98

Drawn IB
Checked JMM
CMWD 95-402

G:\MPA\POINSETTIA\PSLS-E3, 12-JUN-97, 13:24 (FINAL)

331-1E
38 of 48
0020100

PD 411

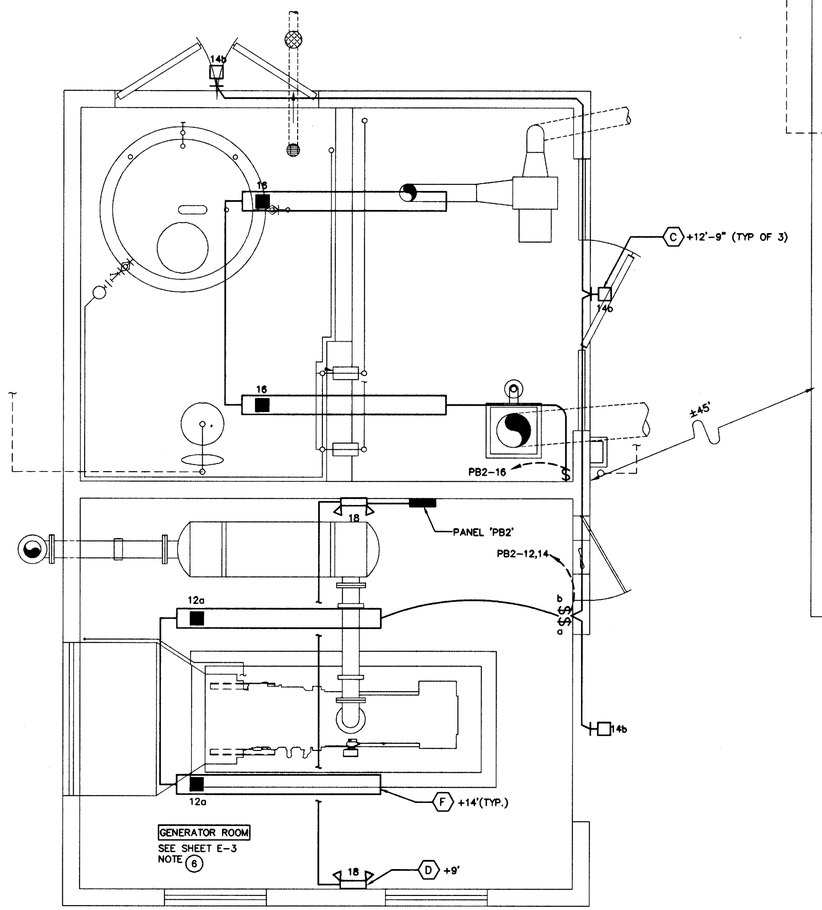

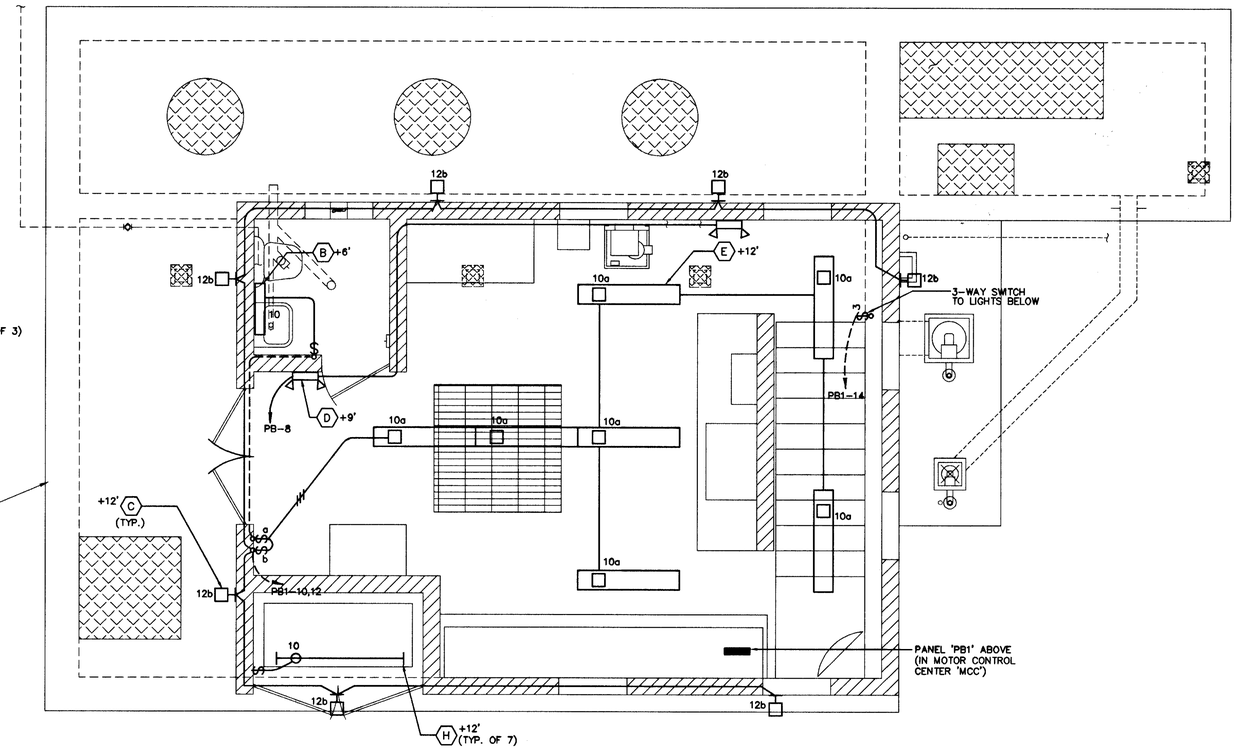

GRADE LEVEL LIGHTING PLAN

SCALE: 3/8"=1'-0"

GRAPHIC SCALE (FEET)

0 2 4 6

SCALE: 3/8"=1'-0"

REGISTERED PROFESSIONAL ENGINEER
JOSEPH M. MORAES
No. E11023
EXP. 6/30/99
ELECTRICAL
STATE OF CALIFORNIA

MPA MORAES/PHAM & ASSOCIATES
CONSULTING ELECTRICAL & MECHANICAL ENGINEERS
5235 AVENIDA ENCINAS STE. G
CARLSBAD CA. 92008
(619) 431-7177

DISTRICT APPROVED CHANGES			
No.	Description	Approved	Date
1	AS-BUILT		

BENCH MARK

Description SEE TITLE SHEET

Location

Record From

Elevation Datum

E-4

CARLSBAD MUNICIPAL WATER DISTRICT

SHEET 39 | ENGINEERING DEPARTMENT | 48 SHEETS

PLANS FOR THE IMPROVEMENT OF:

GRADE LEVEL LIGHTING PLAN

POINSETTIA SEWAGE LIFT STATION

William E. Plummer 28176 6-23-97
District Engineer WILLIAM E. PLUMMER RCE Date
REGISTRATION EXPIRES 3-31-98

Drawn IB
Checked JMM

CMWD 95-402

C:\FILES\JOE\POINSETTIA\PSLS-E4, 16-JUN-97, 12:16 (FINAL)

331-1E
39 of 48
062000

PD 411

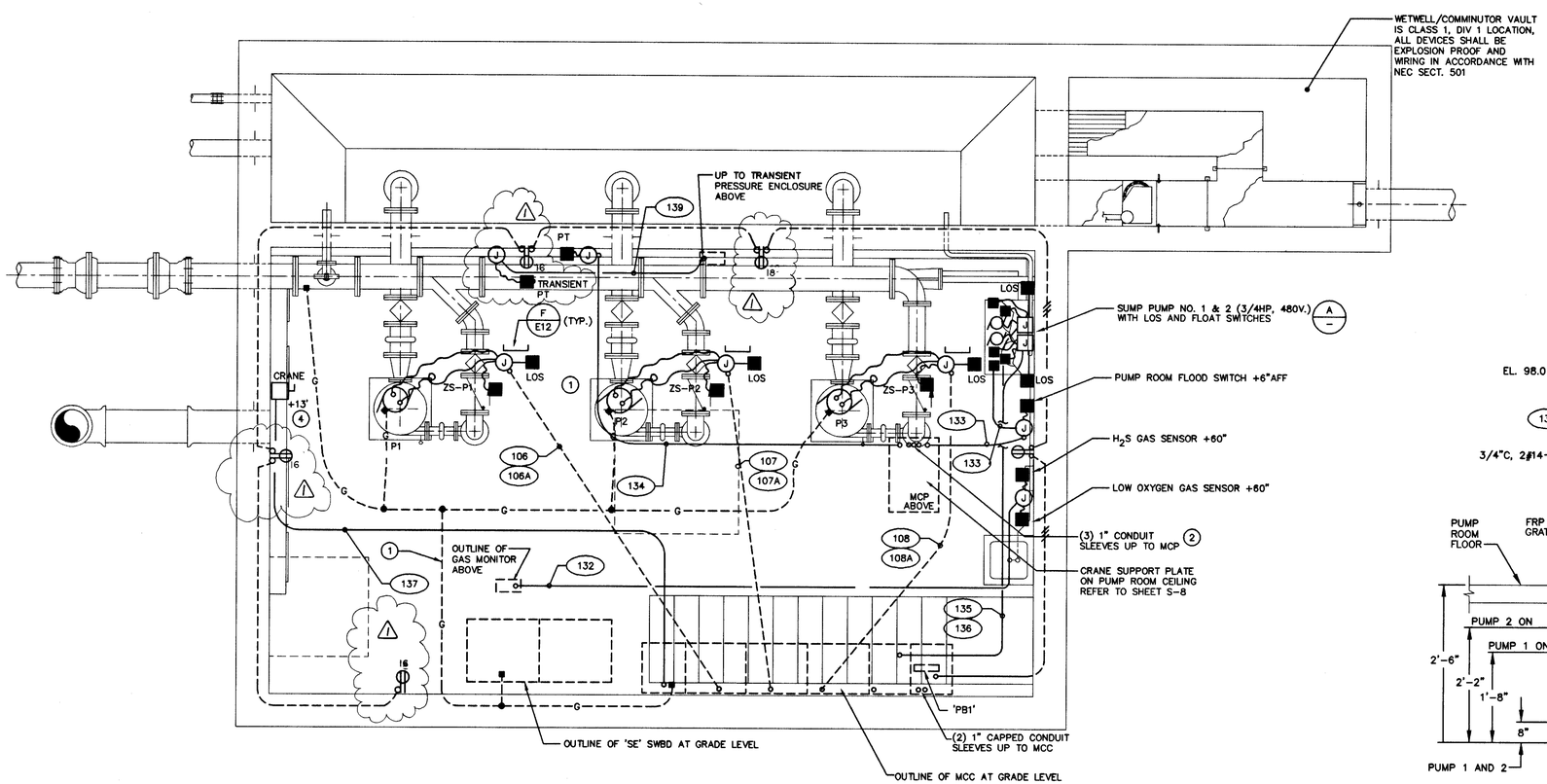

PUMP ROOM ELECTRICAL/SIGNAL PLAN

SCALE: 3/8"=1'-0"

NOTES

1. 4/0 BARE COPPER UFER GROUND. BOND TO SWITCHBOARD, GROUND RODS, MCC, MCP, PUMPS AND DISCHARGE HEADER.
2. PROVIDE (3)1"C.O. STUBBED INTO PUMP ROOM. CAP CONDUIT AT PUMP ROOM CEILING. COORDINATE PENETRATION LOCATIONS WITH CEILING MOUNTED BRIDGE CRANE SUPPORTS IN PUMP ROOM. CONDUIT PENETRATION SHALL BE IN CONCRETE POUR OR BY SLEEVES. LOCATE PENETRATIONS AT MAXIMUM DISTANCE FROM CRANE SUPPORT PLATE.
3. MANUFACTURER SUPPLIED SUBMERSIBLE CABLES (TYP.) FOR MOTOR POWER AND TEMP/MOISTURE SENSORS.
4. LOCATE CRANE DISCONNECT PER FIELD DIRECTION.

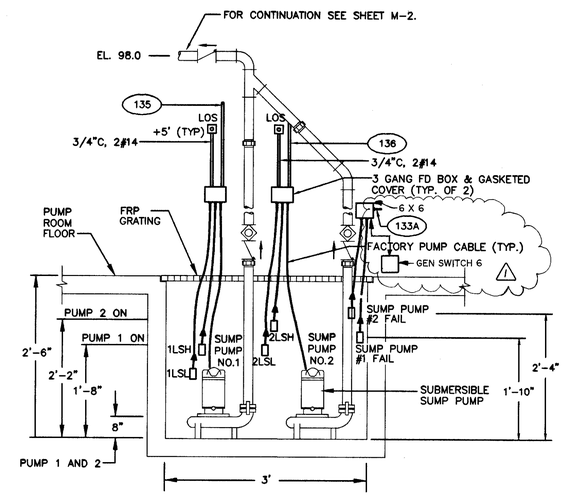

SUMP PUMP DETAIL

NTS

1. LAYOUT SHOWN IS FOR GUIDANCE AND IDENTIFICATION PURPOSES ONLY. ALL EQUIPMENT SHALL BE LOCATED TO BEST SUIT FIELD CONDITIONS AND OPERATIONAL REQUIREMENTS.
2. FRP GRATING SHALL BE NEATLY MODIFIED TO ACCEPT PUMP AND FLOAT CABLES. ALL CABLES SHALL BE SUITABLY STRAIN RELIEVED.
3. CONTRACTOR SHALL FIELD COORDINATE ACTUAL LEVEL SETPOINTS WITH THE OWNER. FLOAT SWITCH WEIGHTS SHALL BE LOCATED 2" FROM FLOAT BODY. ALL FLOAT SWITCHES SHALL BE LOCATED FREE FROM OBSTRUCTIONS. CONTRACTOR SHALL NEATLY HARNESS CABLES AS REQUIRED. CABLE TIES SHALL BE SUITABLE FOR CORROSIVE ENVIRONMENTS AS MANUFACTURED BY THOMAS & BETTS.

GRAPHIC SCALE (FEET)
0 2 4 6
SCALE: 3/8"=1'-0"

REGISTERED PROFESSIONAL ENGINEER JOSEPH M. MORAES No. E10234 EXP. 6/30/99 ELECTRICAL STATE OF CALIFORNIA

MPA MORAES/PHAM & ASSOCIATES
CONSULTING ELECTRICAL & MECHANICAL ENGINEERS
5235 AVENIDA ENCINAS STE. G
CARLSBAD CA. 92008 (619) 431-7177

DISTRICT APPROVED CHANGES			
No.	Description	Approved	Date
1	AS-BUILT		

BENCH MARK
Description SEE TITLE SHEET
Location
Record From
Elevation Datum

E-5

CARLSBAD MUNICIPAL WATER DISTRICT
SHEET 40 | ENGINEERING DEPARTMENT | 48 SHEETS

PLANS FOR THE IMPROVEMENT OF:
PUMP ROOM POWER/SIGNAL PLAN
POINSETTIA SEWAGE LIFT STATION

William E. Plummer 28176 RCE 6-23-97
District Engineer WILLIAM E. PLUMMER Date
REGISTRATION EXPIRES 3-31-98

Drawn IB
Checked JMM
CMWD 95-402

C:\FILES\JOE\POINSETTIA\PSLS-E5, 16-JUN-97, 13:16M (FINAL)

331-1E
40 of 48

PD 411

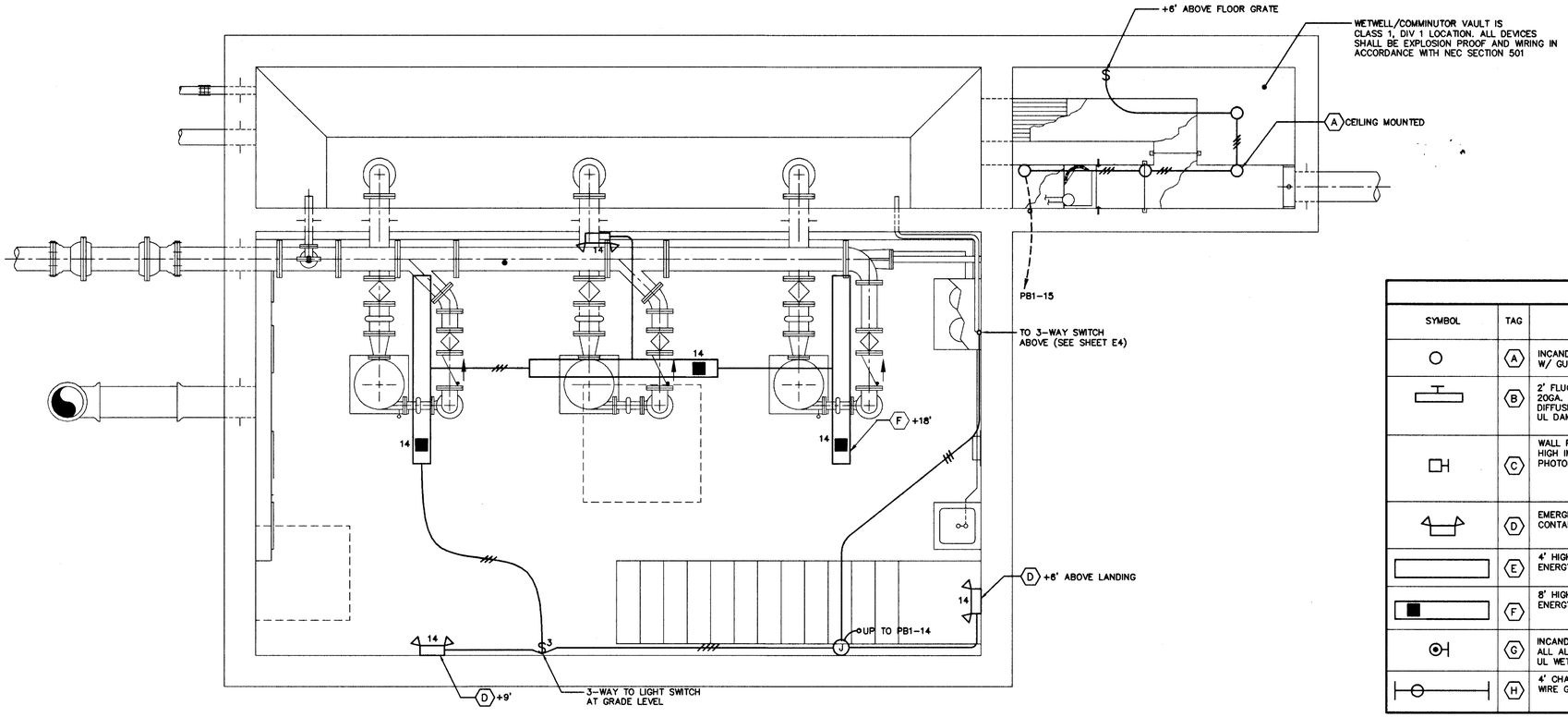

PUMP ROOM LIGHTING PLAN

SCALE: 3/8"=1'-0"

LIGHTING FIXTURE SCHEDULE

SYMBOL	TAG	DESCRIPTION	FIXTURE WATTS / VOLTAGE	LAMP TYPE / NO. OF LAMPS / WATTS	MOUNTING	MANUFACTURER / CATALOG NO.
○	A	INCANDESCENT EXPLOSION PROOF W/ GUARD	100W 120VAC	INCANDESCENT (1) 100WA21	CEILING	APPLETON A-51 AAU-IN AND AAC-75 MOUNTING HOOD
	B	2' FLUORESCENT WALL BRACKET. WELDED 20GA. STEEL HOUSING. .125 IN. PRISMATIC DIFFUSER. ENERGY SAVING BALLAST. UL DAMP LOCATION.	40W 120VAC	FLUORESCENT (2) F20CW	WALL	LITHONIA WS 240 A12.125DL
	C	WALL PAK, DIE CAST ALUMINUM HOUSING, HIGH IMPACT ACRYLIC LENS. PHOTOCELL CONTROL.	80W 120VAC	LOW PRESSURE SODIUM (1) 55W	WALL	SPAULDING #SD-55LPS-PC DARK BRONZE
	D	EMERGENCY LIGHTING UNIT, 6 VOLT SELF CONTAINED NI-CAD BATTERY. NEMA 4X.	20W 120VAC	INCANDESCENT (2) 7.2W, PAR36	WALL	LITHONIA ELU-2XN SURE-LITES UMB-14
	E	4' HIGH IMPACT ACRYLIC DIFFUSER. ENERGY SAVING BALLAST, UL WET LOCATION.	80W 120VAC	FLUORESCENT (2) F40CW	CEILING HUNG	LITHONIA DMW-240-AR-120-ES
	F	8' HIGH IMPACT ACRYLIC DIFFUSER. ENERGY SAVING BALLAST, UL WET LOCATION.	210W 120VAC	FLUORESCENT (2) 800MA	CEILING HUNG	LITHONIA DMW-296HO-AR-120-ES
	G	INCANDESCENT ENCLOSED AND GASKETED ALL ALUMINUM W/ GUARD UL WET LOCATIONS	100W 120VAC	INCANDESCENT (1) 100WA21	WALL	APPLETON A-51 JBW10G-A
	H	4' CHANNEL. ENERGY SAVING BALLAST. WIRE GUARD.	80W 120VAC	FLUORESCENT (2) F40CW	WALL	LITHONIA C240120ES-WG9

GRAPHIC SCALE (FEET)
0 2 4 6
SCALE: 3/8"=1'-0"

REGISTERED PROFESSIONAL ENGINEER JOSEPH M. MORAES No. E10234 Exp. 6/30/99 ELECTRICAL STATE OF CALIFORNIA

MPA MORAES/PHAM & ASSOCIATES
CONSULTING ELECTRICAL & MECHANICAL ENGINEERS
5235 AVENIDA ENCINAS STE. G
CARLSBAD CA. 92008 (619) 431-7177

DISTRICT APPROVED CHANGES			
No.	Description	Approved	Date
1	AS-BUILT		

BENCH MARK
Description SEE TITLE SHEET
Location
Record From
Elevation Datum

E-6

CARLSBAD MUNICIPAL WATER DISTRICT
SHEET 41 | ENGINEERING DEPARTMENT | 48 SHEETS

PLANS FOR THE IMPROVEMENT OF:

PUMP ROOM LIGHTING PLAN

POINSETTIA SEWAGE LIFT STATION

William E. Plummer 28176 RCE 6-23-97
District Engineer WILLIAM E. PLUMMER Date
REGISTRATION EXPIRES 3-31-98

Drawn
Checked
CMWD 95-402

C:\FILES\JOE\POINSETTIA\PSLS-E6, 16-JUN-97, 13:34 (FINAL)

331-1E
11 of 48
002700

PD 411

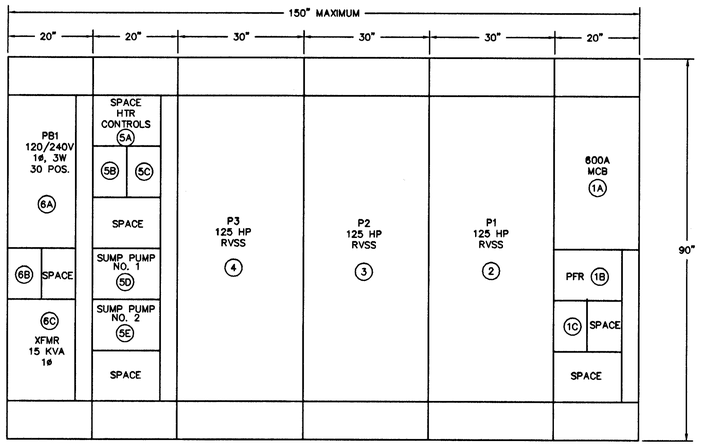

A/E7 MCC ELEVATION
SCALE: 3/4"=1'-0"

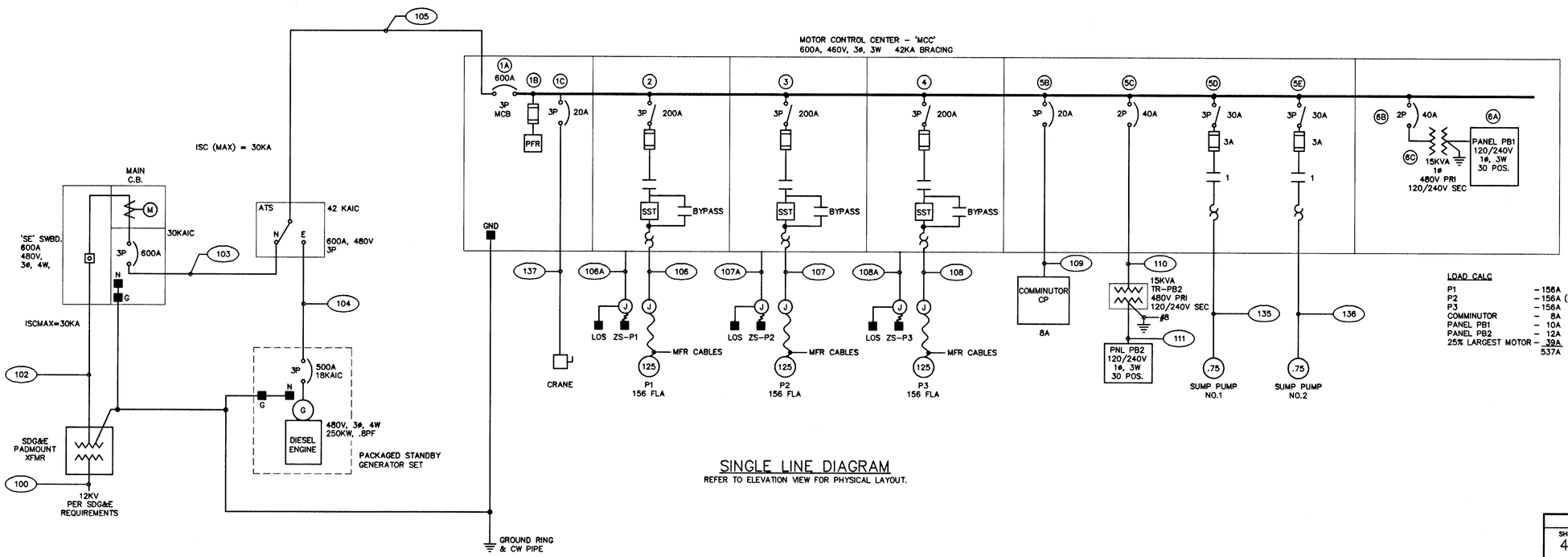

SINGLE LINE DIAGRAM
REFER TO ELEVATION VIEW FOR PHYSICAL LAYOUT.

GRAPHIC SCALE (FEET)
0 1 2 3
SCALE: 3/4"=1'-0"

C:\FILES\JOE\POINSETTIA\PSLS-E7, 16-JUN-97, 13:36 (FINAL)

REGISTERED PROFESSIONAL ENGINEER JOSEPH M. MORAES No. E10239 Exp. 6/30/99 ELECTRICAL STATE OF CALIFORNIA

MPA MORAES/PHAM & ASSOCIATES
CONSULTING ELECTRICAL & MECHANICAL ENGINEERS
5235 AVENIDA ENCINAS STE. G
CARLSBAD CA. 92008 (619) 431-7177

DISTRICT APPROVED CHANGES			
No.	Description	Approved	Date
1	AS-BUILT		

BENCH MARK
Description SEE TITLE SHEET
Location
Record From
Elevation Datum

E-7

CARLSBAD MUNICIPAL WATER DISTRICT

SHEET 42	ENGINEERING DEPARTMENT	48 SHEETS

PLANS FOR THE IMPROVEMENT OF:
SINGLE LINE DIAGRAM & ELEVATIONS
POINSETTIA SEWAGE LIFT STATION

William E. Plummer 28176 RCE 6-23-97
District Engineer WILLIAM E. PLUMMER Date
REGISTRATION EXPIRES 3-31-98

Drawn IB
Checked JMM
CMWD 95-402

331-1E 062000
42 of 48

PD 411

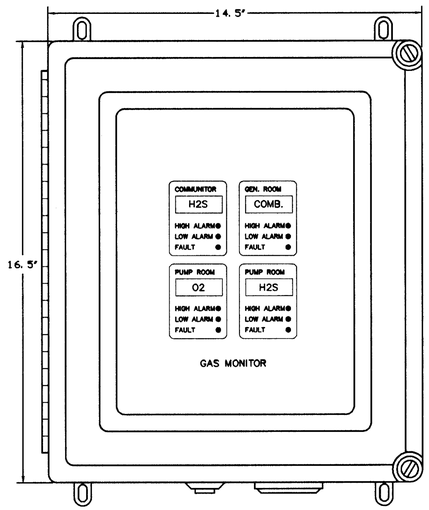

A/E8 GAS MONITOR DISPLAY

1. ENCLOSURE:
   MATERIAL: GRAY FIBERGLASS LID AND BASE, (SOLID COLOR) (4) POLYCARBONATE WALL MOUNTING BRACKETS. RATINGS: NEMA TYPES 4, 4X, IP65 AND DIN 40050.
2. GASKET: NEOPRENE
3. LAYOUT IS BASED ON GASTECH SAFE T NET 410 SERIES.

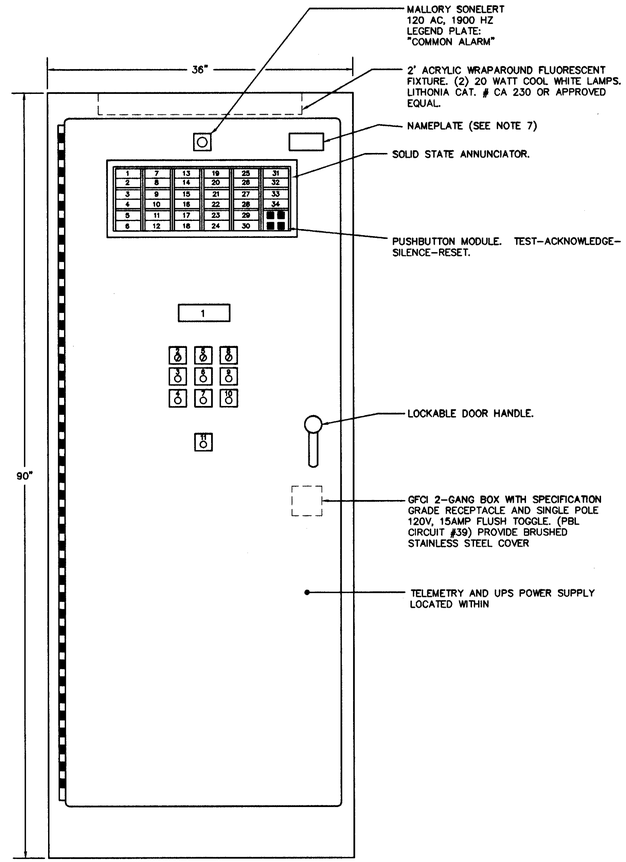

B/E8 MAIN CONTROL PANEL (MCP) ELEVATION

SCALE: 1 1/2" = 1'-0"

GENERAL NOTES

1. ALL DOOR OPENINGS SHALL BE PUNCHED PRIOR TO FINISH PAINT ON CABINET EXTERIOR.
2. ALL INTERNAL EQUIPMENT SHALL BE PRECISELY LAID OUT AND LOCATED BASED ON FUNCTION SERVED.
3. RACK SHALL BE SOLIDLY CONSTRUCTED AND MIG WELDED.
4. DOOR LAYOUT SHOWN IS FOR CONTRACTOR GUIDANCE AND IDENTIFICATION PURPOSES. CONTRACTOR SHALL LOCATE DOOR MOUNTED DEVICES TO BEST SUIT WIRING AND CLEARANCE REQUIREMENTS. ALL COMPONENTS THROUGHOUT INTERIOR SHALL BE LOCATED WHERE READILY ACCESSIBLE FOR MAINTENANCE PURPOSES.
5. CONTRACTOR SHALL FURNISH AND INSTALL (1) 20AMP, 120V SPECIFICATION GRADE GFI RECEPTACLE ENCLOSED IN A 2-GANG BELLBOX ALSO CONTAINING A 15A SINGLE POLE SPECIFICATION GRADE FLUSH TOGGLE SWITCH. 2-GANG COVER SHALL BE BRUSHED STAINLESS STEEL. BOX SHALL BE MOUNTED IN PLAIN VIEW WITHIN CABINET.
6. REFER TO DIVISION 17 SPECIFICATIONS AND CONTROL DIAGRAMS FOR ADDITIONAL REQUIREMENTS.
7. CONTRACTOR SHALL FURNISH 2"X4" MINIMUM WHITE ON BLACK BACKGROUND ENGRAVED NAMEPLATE SOLIDLY MOUNTED

ANNUNICATOR WINDOW SCHEDULE

1. PUMP NO.1 CHECK VALVE MALFUNCTION
2. PUMP NO.1 TEMPERATURE SHUTDOWN
3. PUMP NO. 1 SEAL FAILURE
4. PUMP NO. 1 POWER FAIL (AUTO RESET)
5. SPARE WINDOW
6. WETWELL FLOAT PUMP CALL (AUTO RESET)
7. PUMP NO.2 CHECK VALVE MALFUNCTION
8. PUMP NO.2 TEMPERATURE SHUTDOWN
9. PUMP NO.2 SEAL FAILURE
10. PUMP NO. 2 POWER FAIL (AUTO RESET)
11. SPARE WINDOW
12. SUMP PUMP NO.1 FAIL
13. PUMP NO.3 CHECK VALVE MALFUNCTION
14. PUMP NO.3 TEMPERATURE SHUTDOWN
15. PUMP NO.3 SEAL FAILURE
16. PUMP NO. 3 POWER FAIL (AUTO RESET)
17. SPARE WINDOW
18. SUMP PUMP NO. 2 FAIL
19. LOW INSTRUMENT AIR
20. BUBBLER COMPRESSOR FAILURE
21. WET WELL FLOAT HIGH-HIGH LEVEL (AUTO RESET)
22. WET WELL BUBBLER HIGH LEVEL (AUTO RESET)
23. WET WELL BUBBLER LOW LEVEL (AUTO RESET)
24. WET WELL FLOAT LOW-LOW LEVEL
25. MCC POWER FAILURE (AUTO RESET)
26. GENERATOR BATTERY LOW VOLTAGE (AUTO RESET)
27. GENERATOR RUN (AUTO RESET)
28. GENERATOR FAILURE (AUTO RESET)
29. GENERATOR LOW FUEL (AUTO RESET)
30. DRYWELL FLOODED (AUTO RESET)
31. GAS ALARM (AUTO RESET)
32. INTRUSION (AUTO RESET)
33. METER VAULT FLOODED (AUTO RESET)
34. LOSS OF CONTROL POWER

LEGEND PLATE/PILOT DEVICE SCHEDULE

1 WETWELL LEVEL (DIGITAL INDICATOR)
2 PUMP NO. 1 HAND OFF AUTO (3 POSITION SELECTOR SWITCH)
3 PUMP NO. 1 CALL (INDICATING LIGHT-WHITE)
4 PUMP NO. 1 RUN (INDICATING LIGHT-GREEN)
5 PUMP NO. 2 HAND-OFF-AUTO (3 POSITION SELECTOR SWITCH) [FUTURE ONLY-PROVIDE PLUGS]
6 PUMP NO. 2 CALL (INDICATING LIGHT-WHITE) [FUTURE ONLY-PROVIDE PLUGS]
7 PUMP NO. 2 RUN (INDICATING LIGHT-GREEN) [FUTURE ONLY-PROVIDE PLUGS]
8 PUMP NO. 3 HAND-OFF-AUTO (3 POSITION SELECTOR SWITCH)
9 PUMP NO. 3 CALL (INDICATING LIGHT-WHITE)
10 PUMP NO. 3 RUN (INDICATING LIGHT-GREEN)
11 SYSTEM RESET (PUSHBUTTON, BLACK)

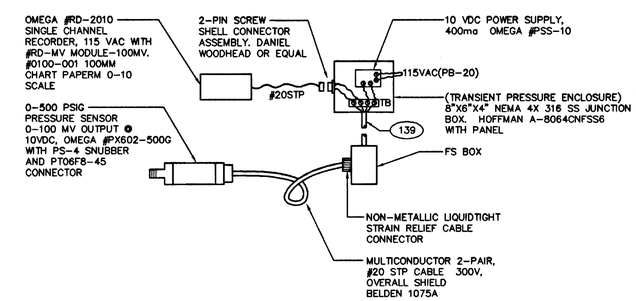

C/E8 ELECTRONIC PRESSURE GAUGE COMPONENTS

E-8

CARLSBAD MUNICIPAL WATER DISTRICT		
SHEET 43	ENGINEERING DEPARTMENT	48 SHEETS

PLANS FOR THE IMPROVEMENT OF:

CONTROL DETAILS

POINSETTIA SEWAGE LIFT STATION

District Engineer WILLIAM E. PLUMMER 28176 RCE — Date 6-23-97
REGISTRATION EXPIRES 3-31-98

Drawn IB
Checked JMM

CMWD 95-402

REGISTERED PROFESSIONAL ENGINEER JOSEPH M. MORAES No. E10234 Exp. 6/30/99 ELECTRICAL STATE OF CALIFORNIA

MPA MORAES/PHAM & ASSOCIATES
CONSULTING ELECTRICAL & MECHANICAL ENGINEERS
5235 AVENIDA ENCINAS STE. G
CARLSBAD CA. 92008 (619) 431-7177

DISTRICT APPROVED CHANGES			
No.	Description	Approved	Date
1	AS-BUILT		

BENCH MARK
Description SEE TITLE SHEET
Location
Record From
Elevation Datum

C:\FILES\JOE\POINSETTIA\PSLS-E8, 16-JUN-97, 13:37 (FINAL)

331-1E
43 of 48
062100

PD 411

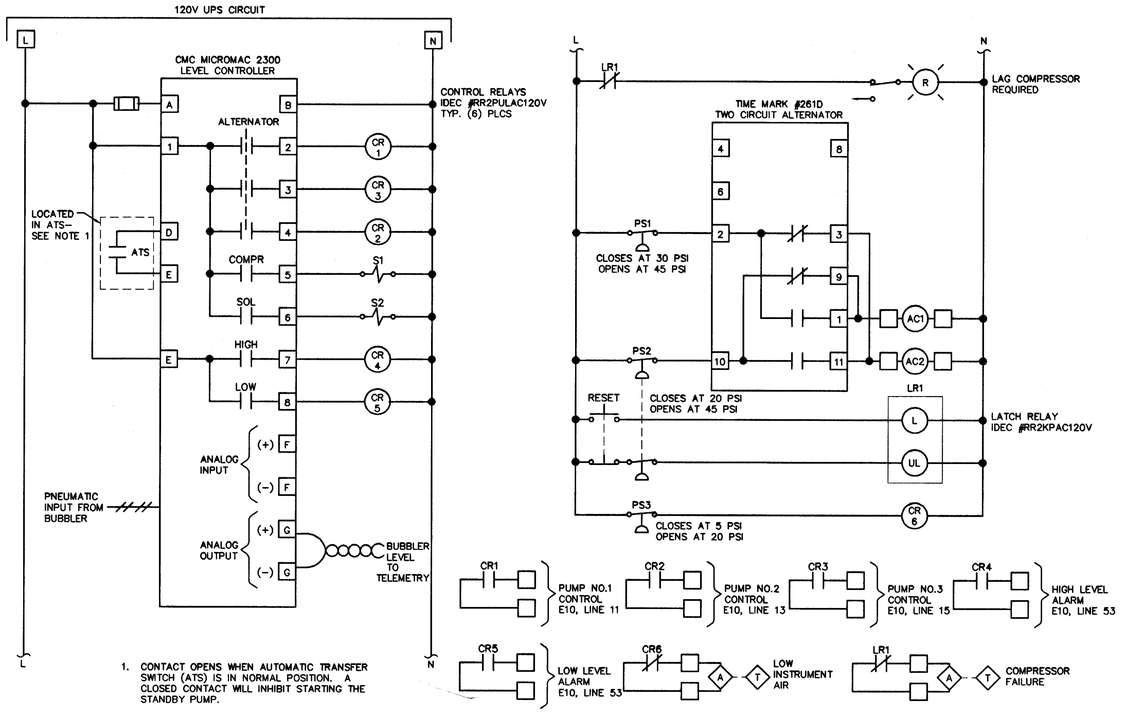

1. CONTACT OPENS WHEN AUTOMATIC TRANSFER SWITCH (ATS) IS IN NORMAL POSITION. A CLOSED CONTACT WILL INHIBIT STARTING THE STANDBY PUMP.

LEVEL CONTROLLER WIRING DIAGRAM

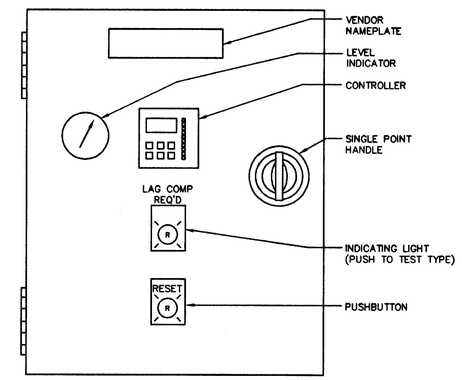

A E9 LEVEL CONTROLLER FRONT VIEW
NTS

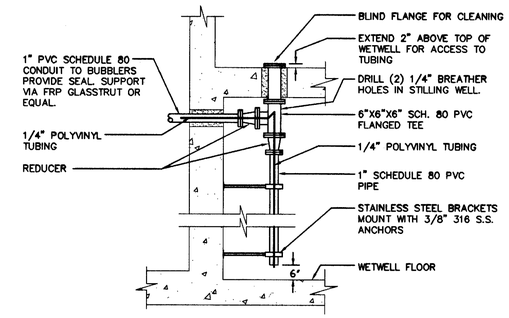

C E9 TYPICAL BUBBLER TUBE DETAIL
NOT TO SCALE

1. PROVIDE CLASS 1 DIVISION 1 SEAL ON 1" PVC SCHEDULE 80 PIPE EXITING WETWELL.
2. ALL WETWELL PENETRATIONS SHALL BE SEALED WITH NON-SHRINK GROUT.
3. ALL HARDWARE SHALL BE 316 S.S.
4. INSTALL BUBBLE LINE A MINIMUM OF 3 FEET AWAY FROM SUCTION BELLS.

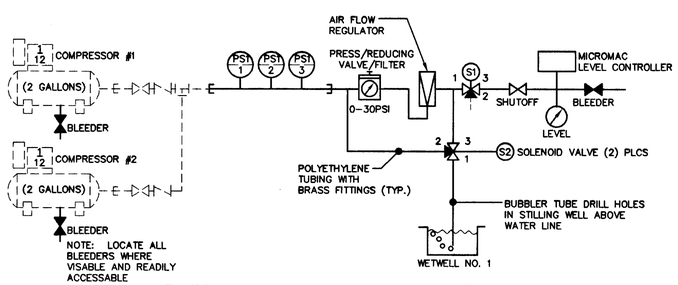

BUBBLER SYSTEM PIPING DIAGRAM

1. AIR COMPRESSOR/RECEIVERS SHALL BE SOLIDLY RACK MOUNTED BELOW LEVEL CONTROLLER ON WALL. IN NO CASE SHALL BLEEDER FITTINGS BE OBSTRUCTED IN ANY WAY.

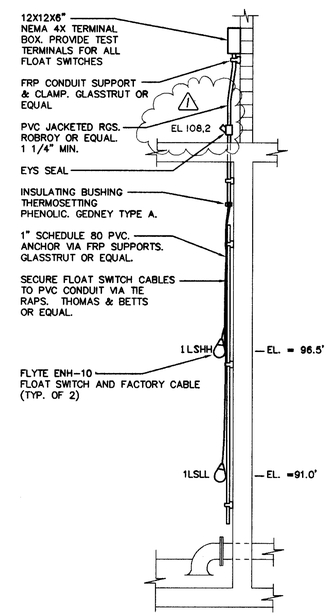

B E9 FLOAT SWITCH DETAIL
NOT TO SCALE

1. ALL HARDWARE SHALL BE 316 STAINLESS STEEL.

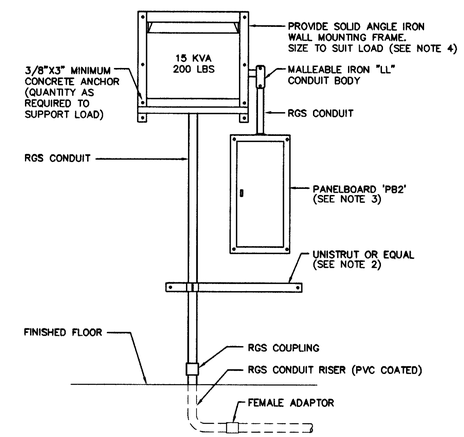

D E9 TYP. WALL MOUNTED XFMR DETAIL
NTS

1. FLATWASHERS AND LOCKWASHERS SHALL BE USED WITH ALL FASTENERS.
2. CONDUIT AND CLAMPS NOT SHOWN FOR CLARITY. ALL CONDUIT TURNING UP INTO PANELBOARDS SHALL BE PRECISELY PLUMB AND EVENLY SPACED. ALL CLAMPS SHALL BE MADE UP TIGHT.
3. PANELBOARD KNOCKOUTS SHALL BE COORDINATED TO BEST SUIT FUTURE EXPANSION. CONTRACTOR SHALL ARRANGE CONDUITS AND LOCATE PANELBOARD TO BEST SUIT FIELD CONDITIONS AND SPACE REQUIREMENTS.
4. ANGLE IRON FRAME SHALL BE SHOP FABRICATED AND MIG WELDED BY A CERTIFIED PROFESSIONAL. ALL JOINTS AND WELDS SHALL BE PRECISE AND SUITABLE TO ACCEPT LOAD OF TRANSFORMER. WALL MOUNTING BRACKETS SHALL BE READILY ACCESSIBLE FOR FIELD MOUNTING. ALL ROUGH EDGES AND CORNERS SHALL BE RADIUSED AND FILED SMOOTH. INSTALLATION IS SUBJECT TO APPROVAL OF THE DISTRICT. SUBMIT DETAILS OF MOUNTING TO DISTRICT PRIOR TO FABRICATION.

E-9

CARLSBAD MUNICIPAL WATER DISTRICT

SHEET 44	ENGINEERING DEPARTMENT	48 SHEETS

PLANS FOR THE IMPROVEMENT OF:

DETAILS / CONTROL DIAGRAMS 1

POINSETTIA SEWAGE LIFT STATION

District Engineer WILLIAM E. PLUMMER 28176 RCE — Date 6-23-9
REGISTRATION EXPIRES 3-31-98

Drawn IB
Checked JMM

CMWD 95-402

REGISTERED PROFESSIONAL ENGINEER — JOSEPH M. MORAES — No. E10234 — Exp. 6/30/99 — ELECTRICAL — STATE OF CALIFORNIA

MPA MORAES/PHAM & ASSOCIATES
CONSULTING ELECTRICAL & MECHANICAL ENGINEERS
5235 AVENIDA ENCINAS STE. G
CARLSBAD CA. 92008 (619) 431-7177

DISTRICT APPROVED CHANGES			
No.	Description	Approved	Date
1	AS-BUILT		

BENCH MARK
Description SEE TITLE SHEET
Location
Record From
Elevation Datum

PD 411

331-1E
44 of 48
06/100

C:\FILES\JOE\POINSETTIA\PSLS-E9, 16-JUN-97, 13:39 (FINAL)

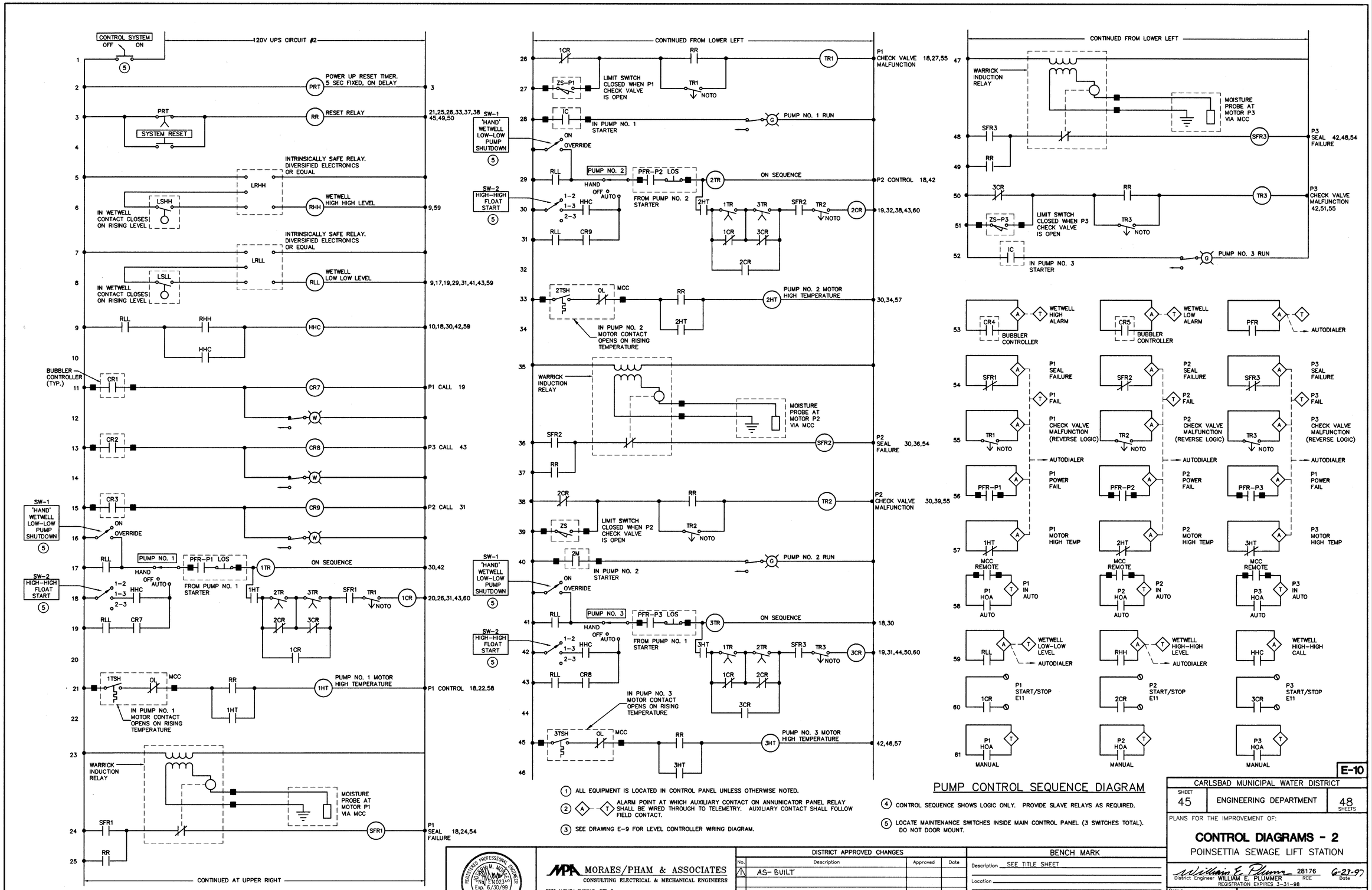

PUMP CONTROL SEQUENCE DIAGRAM

1. ALL EQUIPMENT IS LOCATED IN CONTROL PANEL UNLESS OTHERWISE NOTED.
2. A — T ALARM POINT AT WHICH AUXILIARY CONTACT ON ANNUNICATOR PANEL RELAY SHALL BE WIRED THROUGH TO TELEMETRY. AUXILIARY CONTACT SHALL FOLLOW FIELD CONTACT.
3. SEE DRAWING E-9 FOR LEVEL CONTROLLER WIRING DIAGRAM.
4. CONTROL SEQUENCE SHOWS LOGIC ONLY. PROVIDE SLAVE RELAYS AS REQUIRED.
5. LOCATE MAINTENANCE SWITCHES INSIDE MAIN CONTROL PANEL (3 SWITCHES TOTAL). DO NOT DOOR MOUNT.

REGISTERED PROFESSIONAL ENGINEER JOSEPH M. MORAES No. E 10239 Exp. 6/30/99 ELECTRICAL STATE OF CALIFORNIA

MPA MORAES/PHAM & ASSOCIATES
CONSULTING ELECTRICAL & MECHANICAL ENGINEERS
5235 AVENIDA ENCINAS STE. G
CARLSBAD CA. 92008 (619) 431-7177

DISTRICT APPROVED CHANGES			
No.	Description	Approved	Date
1	AS-BUILT		

BENCH MARK
Description SEE TITLE SHEET
Location
Record From
Elevation Datum

E-10

CARLSBAD MUNICIPAL WATER DISTRICT

SHEET 45 | ENGINEERING DEPARTMENT | 48 SHEETS

PLANS FOR THE IMPROVEMENT OF:

CONTROL DIAGRAMS - 2

POINSETTIA SEWAGE LIFT STATION

William E. Plummer 28176 RCE 6-23-97 Date
District Engineer WILLIAM E. PLUMMER
REGISTRATION EXPIRES 3-31-98

Drawn IB
Checked JMM

CMWD 95-402

C:\FILES\JOE\POINSETTIA\PSLS-E10, 16-JUN-97, 13:48 (FINAL)

331-1E
45 of 48
020100

PD 411

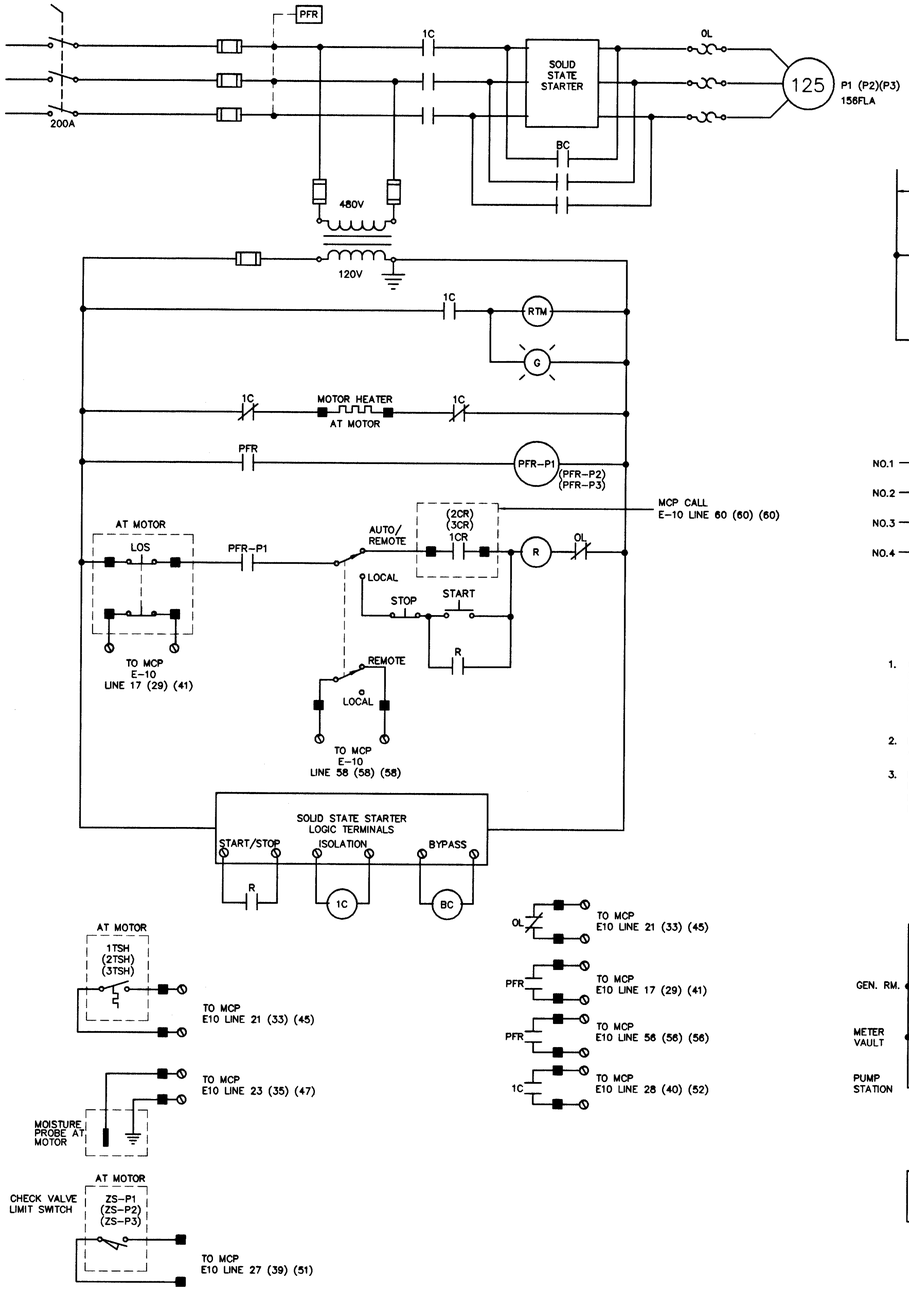

PUMP CONTROL CIRCUIT P1 (P2) (P3)

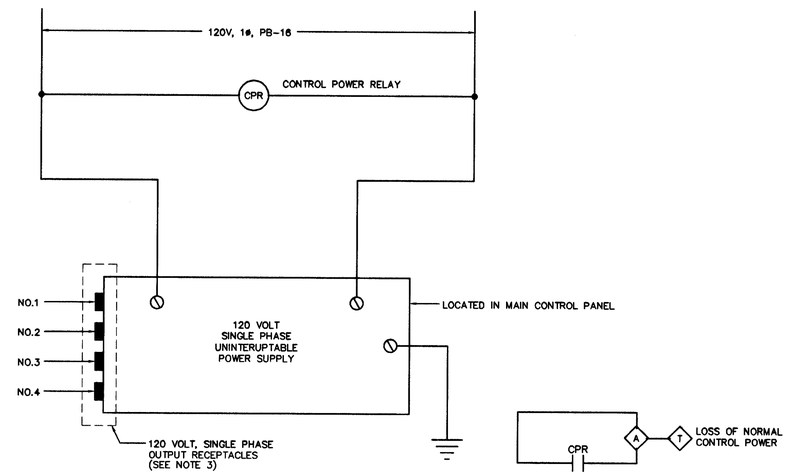

1. CORD CAPS USED FOR CONNECTION TO UPS RECEPTACLES SHALL BE SPECIFICATION GRADE AS MANUFACTURED BY BRYANT OR HUBBELL. CORDS SHALL BE 16/3 TYPE SEO-CSA TYPE STE AS MANUFACTURED BY ELECTRICAL CONDUCTORS OR APPROVED EQUAL AND SHALL BE NEATLY TRAINED AND HARNESSED. CORDS SHALL ENTER WIREWAY IN A NEAT AND WORKMANLIKE MANNER AND SHALL BE PERMANENTLY LABELED TO IDENTIFY ORIGIN. WIRE TIES SHALL BE AS MANUFACTURED BY THOMAS AND BETTS OR APPROVED EQUAL.
2. EQUIPMENT SHALL BE SOLIDLY MOUNTED IN PLAIN VIEW WITH TERMINALS AND RECEPTACLES READILY ACCESSIBLE FOR MAINTENANCE AND METERING PURPOSES.
3. NO. 1 – BUBBLER
   NO. 2 – CONTROL LOGIC
   NO. 3 – TELEMETRY/AUTODIALER
   NO. 4 – ANNUNCIATOR AND GAS DETECTOR

UPS DIAGRAM

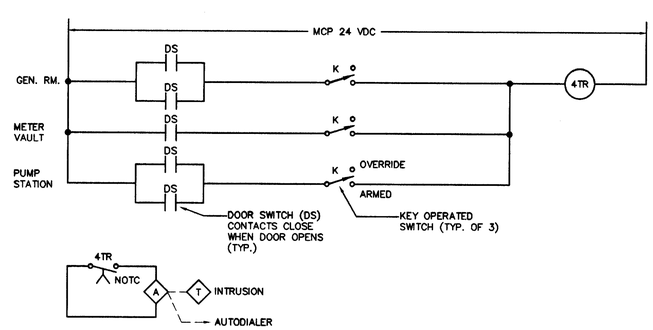

INTRUSION CIRCUIT

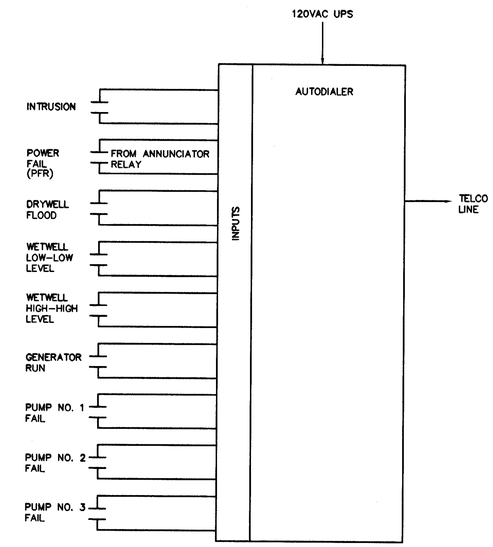

AUTODIALER BLOCK DIAGRAM

NOTE: ALL ALARM INPUTS ARE FROM ANNUNCIATOR OUTPUTS

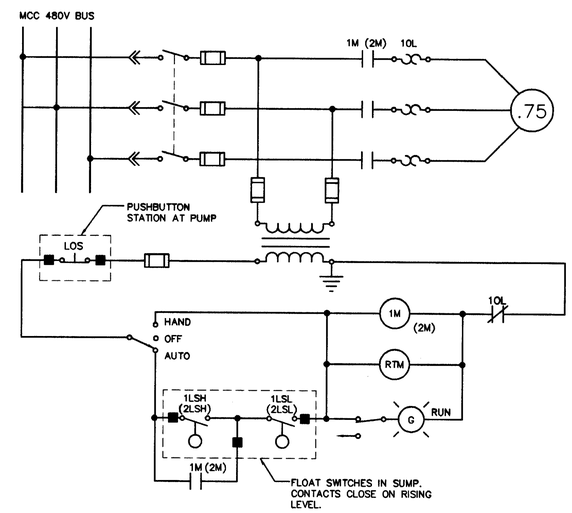

SUMP PUMP NO.1 (NO.2)

1. ALL EQUIPMENT SHOWN ABOVE IS LOCATED IN MCC UNLESS OTHERWISE NOTED.
2. CONTROL CIRCUIT IS TYPICAL OF EACH PUMP.

E-11

CARLSBAD MUNICIPAL WATER DISTRICT

SHEET 46	ENGINEERING DEPARTMENT	48 SHEETS

PLANS FOR THE IMPROVEMENT OF:

CONTROL DIAGRAMS - 3

POINSETTIA SEWAGE LIFT STATION

William E. Plummer 28176 RCE 6-23-97
District Engineer WILLIAM E. PLUMMER Date
REGISTRATION EXPIRES 3-31-98

Drawn IB
Checked JMM
CMWD 95-402

REGISTERED PROFESSIONAL ENGINEER JOSEPH M. MORAES No. 15102 Exp. 6/30/99 ELECTRICAL STATE OF CALIFORNIA

MPA MORAES/PHAM & ASSOCIATES
CONSULTING ELECTRICAL & MECHANICAL ENGINEERS
5235 AVENIDA ENCINAS STE. G
CARLSBAD CA. 92008 (619) 431-7177

DISTRICT APPROVED CHANGES			
No.	Description	Approved	Date
1	AS- BUILT		

BENCH MARK
Description SEE TITLE SHEET
Location
Record From
Elevation Datum

C:\FILES\JOE\POINSETTIA\PSLS-E11, 16-JUN-97, 13:51 (FINAL)

331-1E
46 of 48
062000

PD 411

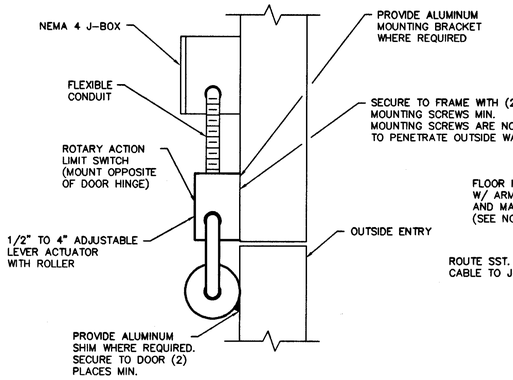

ENTRY DOOR

NOTE:
ACTUATE SWITCH WHEN DOOR OPENS AT 15° MAX.
SQ 'D' CLASS #9007, HAI ARM AND #C54B2 – SWITCH OR APPROVED EQUAL.

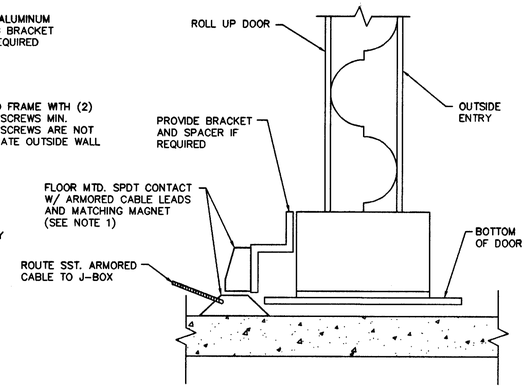

ROLL UP DOOR

NOTE 1:
SWITCH ACTIVATES WHEN DOOR OPENS. PROVIDE PROPER GAP PER MANUFACTURER'S SPECIFICATIONS. SENTROL #2207-AH OR APPROVED EQUAL.

A/E12 DOOR ENTRY SWITCHES
N.T.S.

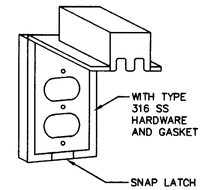

B/E12 CHEMICAL FEEDER PUMP RECEPTACLE COVER
NOT TO SCALE

NOTE:
COVER SHALL BE TAYMAC OR APPROVED EQUAL COMPLYING WITH NEC ARTICLE 410-57(b) AND SHALL BE UL LISTED.

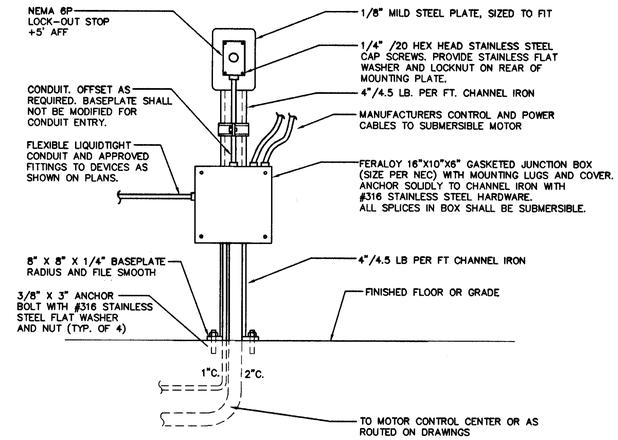

F/E12 TYPICAL CONTROL PEDESTAL
NTS

1. ENTIRE CONTROL STATION PEDESTAL SHALL BE HOT DIP GALVANIZED AFTER FABRICATION AND WELDING. ALL EDGES AND CORNERS SHALL BE ROUNDED OFF EVENLY AND FILED SMOOTH BEFORE GALVANIZING.
2. CONTRACTOR SHALL ADJUST LAYOUT AS REQUIRED TO SUIT EQUIPMENT ACTUALLY FURNISHED.
3. LIQUIDTIGHT CONDUIT SHALL NOT EXCEED 24" WITHOUT APPROVED SUPPORTS. CONNECTORS SHALL BE AS MANUFACTURED BY ETP OR APPLETON.
4. HEX HEAD HARDWARE SHALL BE USED THROUGHOUT, SLOTTED HEAD SCREWS SHALL NOT BE ACCEPTABLE. 1/4" SHALL BE CONSIDERED MINIMUM.

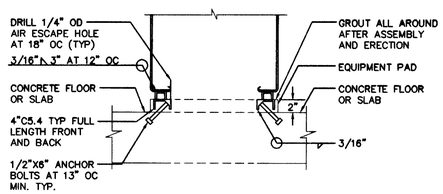

C/E12 TYPICAL FREESTANDING EQUIPMENT MOUNTING
N.T.S.

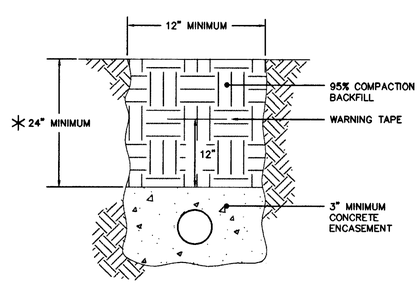

D/E12 CONCRETE ENCASED CONDUIT
NTS

✳ 30" FOR SDG&E AND TELCO

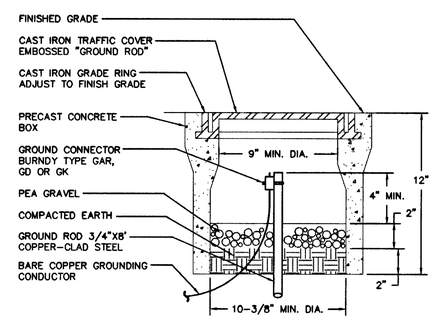

E/E12 GROUND ROD AND BOX INSTALLATION
N.T.S.

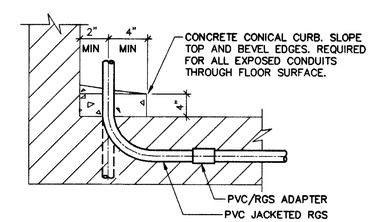

G/E12 PUMP ROOM CONDUIT CURB
NOT TO SCALE

REGISTERED PROFESSIONAL ENGINEER JOSEPH M. MORAES No. E-10234 Exp. 6/30/99 ELECTRICAL STATE OF CALIFORNIA

MPA MORAES/PHAM & ASSOCIATES
CONSULTING ELECTRICAL & MECHANICAL ENGINEERS
5235 AVENIDA ENCINAS STE. G
CARLSBAD CA. 92008
(619) 431-7177

DISTRICT APPROVED CHANGES

No.	Description	Approved	Date
1	AS-BUILT		

BENCH MARK
Description SEE TITLE SHEET
Location
Record From
Elevation Datum

E-12

CARLSBAD MUNICIPAL WATER DISTRICT

SHEET 47	ENGINEERING DEPARTMENT	48 SHEETS

PLANS FOR THE IMPROVEMENT OF:

DETAILS

POINSETTIA SEWAGE LIFT STATION

District Engineer WILLIAM E. PLUMMER 28176 RCE — Date 6-23-97
REGISTRATION EXPIRES 3-31-98

Drawn IB
Checked JMM

CMWD 95-402

C:\FILES\JOE\POINSETTIA\PSLS-E12, 16-JUN-97, 14:28 (FINAL)

331-1E 10/2000

47 of 48

PD 411

ITEM NO.	CONDUIT NO.	CONDUIT SIZE	FROM	TO	CABLE QTY.	CABLE SIZE	CABLE GND.	VOLTAGE	REMARKS
1	100	(1)4"	UTILITY POLE	PADMOUNT TRANSFORMER	3	#2		12KV	PER SDG&E REQUIREMENTS
2	100A	(1)4"	STREET STUBOUT	PADMOUNT TRANSFORMER				12KV	CONDUIT ONLY
3	101	2"	UTILITY POLE	TELEPHONE BACKBOARD				–	CONDUIT ONLY
4	101A	1"	TELEPHONE BACKBOARD	MCP				–	CONDUIT ONLY, PER TELCO
5	102	(2)4"	PADMOUNT TRANSFORMER	'SE' SWITCHBOARD				480	PER SDG&E REQUIREMENTS
6									
7	103	(2)3"	'SE' SWBD	ATS	3	#350 MCM	#1	480	FEEDER–EACH CONDUIT
8									
9	104	(2)3"	GENERATOR	ATS	3	#350 MCM	#1	480	FEEDER–EACH CONDUIT
10									
11	105	(2)3"	ATS	MCC	3	#350 MCM	#1	480	FEEDER–EACH CONDUIT
12									
13	106	2"	MCC	P–1	3	#4/0	#4	480	MOTOR POWER
14					5	#14	#14	120	MOTOR TEMP, MOISTURE DET.
15	106A	1"	MCC	P–1	6	#14	#14	120	LOS, ZS–P1
16									
17	107	2"	MCC	P–2	3	#4/0	#4	480	MOTOR POWER
20					5	#14	#14	120	MOTOR TEMP, MOISTURE DET.
21	107A	1"	MCC	P–2	6	#14	#14	120	LOS, ZS–P2
22	108	2"	MCC	P–3	3	#4/0	#4	480	MOTOR POWER
23					5	#14	#14	120	MOTOR TEMP, MOISTURE DET.
24	108A	1"	MCC	P–3	6	#14	#14	120	LOS, ZS–P3
27									
28	109	3/4"	MCC	COMMINUTOR CP	3	#12	#12	480	POWER
29									
30	110	1"	MCC	TR–PB2	2	#6	#10	480	XFMR FEEDER
31									
34	111	1"	TR–PB2	PB2	3	#4	#8	240	PB2 FEEDER
35									
36	112	1"	PB2	METER VAULT	2	#10	#12	120	VAULT POWER PB2–13
37									
38	113	1"	METER VAULT	MCP	6	#14	#14	120	VAULT INTRUSION & FLOOD
39									
40	114	1"	METER VAULT XDCR	FLOW INDICATOR	2	COAX			MFR SUPPLIED CABLES
41									
42	115	1"	GEN ROOM GAS DET.	GAS MONITOR PANEL	1	#18 TW/SH		24	COMBUSTIBLE GAS
43									
44	116	(2)1"	GEN. ROOM	MCC	–	–	–	–	SPARE, CONDUIT ONLY
45									
46	117	1"	CHEM TANK LT	MCP	1	#18 TW/SH	–	24	TANK LEVEL
47									
48	118	1"	GENERATOR SKID	MCP	–	–	–	–	SPARE CONDUIT ONLY
49									
50	119	1"	GENERATOR CP	ATS	4	#14	#14	120	GEN START/STOP SIGNAL
51									
52	120	1"	GENERATOR CP	MCP	14	#14	#14	120	GENERATOR ALARMS
53					2	#14	–	–	SPARE CONDUCTORS
54	121	3/4"	GAS MONITOR PANEL	MCP	2	#14	–	–	GAS ALARM
55					1	#18 TW/SH		24	WETWELL GAS LEVEL
56					2	#12	#12	120	
57	122	3/4"	ATS	MCP	4	#14	#14	120	ATS POSITION – CONTROL
58									
59	123	1"	GEN RM INTRUSION	MCP	4	#14	#14	120	GEN. RM. INTRUSION
60									
61	124	3/4"	FLOW INDICATOR	MCP	1	#18 TW/SH	–	24	FLOW SIGNAL
62									
63	125	3/4"	BUBBLER CP	MCP	14	#14	#14	120	PWR & ALARMS – CONTROL
64									
65	126	3/4"	BUBBLER CP	MCP	1	#18 TW/SH	–	24	WETWELL LEVEL
66									
67	127	3/4"	J–BOX AT COMMINUTOR CP	MCP	8	#14	#14	120	COMMINUTOR RUN & FAIL,
68									WETWELL FLOAT SWITCHES
69									
70	128	2"	MCC	MCP	–	–	–	–	SPARE CONDUIT ONLY
71									
72	129	2"	MCC	MCP	66	#14	#14	120	PUMP CONTROL, PWR FAIL RELAY
73									
74	130	1"	COMMINUTOR CP	COMMINUTOR	2	#14	–	24	EM STOP PB
75									
76	131	1"	COMMINUTOR VAULT	GAS MONITOR PANEL	1	#18 TW/SH	–	24	COMMINUTOR VAULT H2S
77	132	3/4"	PUMP ROOM	GAS MONITORING PANEL	2	#18 TW/SH	–	24	H2S & O2 GAS DETECTORS
78	133	3/4"	PUMP ROOM FLOOD SW.	MCP	6	#14	#14	120	
79	134	3/4"	PRESSURE TRANSMITTER	MCP	1	#18 TW/SH	–	24	DISCHARGE PRESSURE/PUMP FAIL
80	135	3/4"	MCC	SUMP PUMP NO.1	3	#12	#12	480	POWER
81					5	#14	#14	120	CONTROL
82	136	3/4"	MCC	SUMP PUMP NO.2	3	#12	#12	480	POWER
83					5	#14	#14	120	CONTROL
84	137	3/4"	MCC	CRANE DISCONNECT	3	#12	#12	480	CRANE POWER
85	138								
86	139	3/4"	TRANSIENT PRESSURE XMTR	TRANSIENT PRESSURE XMTR	1			10	BELDEN 1075A

PANEL PB–1

MOUNTING MCC — 120/240 VOLT 1 PHASE 3 WIRE — MAIN 70A — 10,000 A.I.C. SYM. — BUS 125 Cu

LOCATION	WATTAGE ØA	WATTAGE ØB	REC	LTG	POLE	BKR	CKT NO.	ØA ØB	CKT NO.	BKR	POLE	LTG	REC	WATTAGE ØA	WATTAGE ØB	LOCATION
RECEPTACLE	180		1		1	20	1		2	20	1		3	1780		RECEPT/RR FAN/HTR
NCC HEATERS FROM UPS		300					3		4				1		180	TEL BKBD RECPT
MCP LIGHT/RECPT	300						5		6				3	540		OUTDOOR RECPT
MCP UPS		1500					7		8				2		100	EM LTS
WETWELL SUPPLY FAN	650						9		10			9		720		UPPER LTS
PUMP ROOM SUP. FAN		1120					11		12			7			560	OUTDOOR LTS
FLOW INDICATOR	40						13		14			6		730		LOWER LTS
COMMINUTOR LTS		400		4			15		16				2		360	LOWER RECPT
IRRIG. CONTROLLER	200						17		18				3	360		LOWER RECPT
BUBBLER PUMPS							19		20				1		360	TABLE RECEPT B PRESSURE MTR
SPACE							21		22							SPACE
							23		24							
							25		26							
							27		28							
							29		30							
	1370	3020					WATTS/LINE							4130	1740	

ØA= 5500 — ØB= 4760 — TOTAL WATTS= 10260 — AMPS/LINE= 43 — LCL AMPS= 26

PANEL PB–2

MOUNTING SURFACE — 120/240 VOLT 1 PHASE 3 WIRE — MAIN 70A — 10,000 A.I.C. SYM. — BUS 125 Cu

LOCATION	WATTAGE ØA	WATTAGE ØB	REC	LTG	POLE	BKR	CKT NO.	ØA ØB	CKT NO.	BKR	POLE	LTG	REC	WATTAGE ØA	WATTAGE ØB	LOCATION
PUMP RM EXH FAN	1127				1	20	1		2	20	1			700		CHEM FDR
SPARE							3		4						700	CHEM FDR
GEN EXH FAN	50						5		6							SPARE
BATT CHRGR		300					7		8				2		360	GEN RM RECPT
GEN WATER HTR	200					30	9		10				4	720		OUTSIDE RECPT
GEN HTR		2500			1	20	11		12			2			420	GEN RM LTS
METER VAULT	600				1	20	13		14			3		200		OUTSIDE LTS
SPACE							15		16			2			420	CHEM AREA LTS
							17		18			2		50		EM LTS
							19		20	20	2				1000	WETWELL EXH. FAN
							21		22	–	–			1000		
							23		24							SPACE
							25		26							
							27		28							
							29		30							
	1977	2800					WATTS/LINE							2670	2900	

ØA= 4647 — ØB= 5700 — TOTAL WATTS= 10347 — AMPS/LINE= 43 — LCL AMPS= 26

C:\FILES\JOE\POINSETTIA\PSLS-E13, 16-JUN-97, 14:52 (FINAL)

REGISTERED PROFESSIONAL ENGINEER — JOSEPH M. MORAES — No. E10231 — Exp. 6/30/99 — ELECTRICAL — STATE OF CALIFORNIA

MPA MORAES/PHAM & ASSOCIATES
CONSULTING ELECTRICAL & MECHANICAL ENGINEERS
5235 AVENIDA ENCINAS STE. G
CARLSBAD CA. 92008 (619) 431-7177

DISTRICT APPROVED CHANGES			
No.	Description	Approved	Date
1	AS-BUILT		

BENCH MARK
Description SEE TITLE SHEET
Location
Record From
Elevation Datum

E-13

CARLSBAD MUNICIPAL WATER DISTRICT
SHEET 48 — ENGINEERING DEPARTMENT — 48 SHEETS

PLANS FOR THE IMPROVEMENT OF:

CONDUIT AND CABLE SCHEDULE
POINSETTIA SEWAGE LIFT STATION

William E. Plummer 28176 6-23-97
District Engineer WILLIAM E. PLUMMER RCE Date
REGISTRATION EXPIRES 3-31-98

Drawn IB
Checked JMM

CMWD 95-402

331-1E 062000
48 of 48

PD 411

Appendix C

CARB Fleet Compliance Certification

DISCLOSURE & SUBMITTAL REQUIREMENT

VEHICLE EMISSION DISCLOSURE & COMPLIANCE REQUIREMENT.
This Project is subject to the following regulation(s) by the California Air Resources Board. In bidding this Project, it shall be the Bidder's sole responsibility to evaluate and include the cost of complying with all equipment and vehicle emission requirements under this Contract and applicable law in its Bid.

ADVANCED CLEAN FLEETS.
Vehicles with a Gross Vehicle Weight Rating (GVWR) greater than 8,500 lbs. and light-duty package delivery vehicles operated in California may be subject to the California Air Resources Board Advanced Clean Fleets regulations. Such vehicles may therefore be subject to requirements to reduce emissions of air pollutants. For more information, please visit the CARB Advanced Clean Fleets webpage at https://ww2.arb.ca.gov/our-work/programs/advanced-clean-fleets.

Bidders utilizing subcontractors shall provide a signed certificate of reported compliance for each listed subcontractor in the space provided in the Proposed Subcontractors form. Bidders, and its subcontractors must be registered as compliant fleets at the time of bid submittal. In the event that a bidder, or its subcontractors, are exempt from this regulation, the bidder must submit a signed statement attesting to the fact, and to the reason(s) why it is not subject to the High Priority and Federal Fleets Regulation of Title 13, CCR Section 2015 through 2015.6 and the State and Local Government Fleets Regulation of Title 13, CCR Section 2013 through 2013.4.

Failure to certify as a compliant fleet or provide an attestation to an exemption, may render the bid non-responsive.

IN-USE OFF-ROAD DIESEL-FUELED FLEETS.
Any contractor utilizing off highway vehicles or equipment may be subject to compliance with the In-Use Off-Road Diesel-Fueled Fleets Regulation. For more information, please visit the CARB In-Use Off-Road Diesel-Fueled Fleets Regulation webpage at: https://ww2.arb.ca.gov/our-work/programs/use-road-diesel-fueled-fleets-regulation.

Bidders shall submit with its Bid a valid California Air Resources Board certificate of reported compliance. Bidders utilizing subcontractors shall submit the DOORS ID number for each listed subcontractor in the space provided in the Proposed Subcontractors form. Bidders are responsible for including a certificate of reported compliance for each identified subcontractor. **Failure to submit valid certificates may render the bid non-responsive.**

GENERAL COMPLIANCE WITH LAWS.
Contractor will keep fully informed of federal, state and local laws and ordinances and regulations which in any manner affect those employed by Contractor, or in any way affect the performance of the Services by Contractor. Contractor will at all times observe and comply with these laws, ordinances, and regulations and will be responsible for the compliance of Contractor's services with all applicable laws, ordinances and regulations.

Contractor will be aware of the requirements of the Immigration Reform and Control Act of 1986 and will comply with those requirements, including, but not limited to, verifying the eligibility for employment of all agents, employees, subcontractors and consultants whose services are required by this Agreement.

Contractor is aware of the requirements of the emissions reduction regulations being mandated by the California Air Resources Board ("CARB") and that it will comply with all applicable regulations before commencing the performance of the work and maintain compliance throughout the duration of this Agreement.

CALIFORNIA AIR RESOURCES BOARD.
The California Air Resources Board ("CARB") implemented amendments to the In-Use Off-Road Diesel- Fueled Fleets Regulations ("Regulation") which are effective on January 1, 2024, and apply broadly to all self-propelled off-road diesel vehicles 25 horsepower or greater and other forms of equipment used in California. A copy of the Regulation is available at:

https://ww2.arb.ca.gov/sites/default/files/barcu/regact/2022/off-roaddiesel/appa-1.pdf

Bidders are required to comply with all CARB and Regulation requirements, including, without limitation, all applicable sections of the Regulation, as codified in Title 13 of the California Code of Regulations section 2449 *et seq.* throughout the term of the Project. **Bidders must provide, with their Bid, copies of Bidder's and all listed subcontractors the most recent, valid Certificate of Reported Compliance ("CRC") issued by CARB**. Failure to provide valid CRCs as required herein may render the Bid non-responsive.

The City of Carlsbad is a Public Works Awarding Body, as that term is defined under Title 13 California Code of Regulations section 2449(c)(46). Accordingly, Bidders must submit, with their Bids, valid Certificates of Reported Compliance ("CRC") for the Bidder's fleet, and for the fleets of any listed subcontractors (including any applicable leased equipment or vehicles). Bidders must complete and submit the Fleet Compliance Certification, on the form provided. Failure to provide a CRC for the Bidder, and for all listed subcontractors, or failure to complete the Fleet Compliance Certification, may render the **Bid non-responsive**.

COMPLIANCE WITH CALIFORNIA AIR RESOURCES BOARD REGULATIONS.
Contractor shall comply, and shall ensure all subcontractors comply, with all applicable requirements of the most current version of the California Air Resources Board ("CARB") regulations including, without limitation, all applicable terms of Title 13, California Code of Regulations Division 3, Chapter 9 and all pending amendments ("Regulation").

Throughout the Project, and for three (3) years thereafter, Contractor shall make available for inspection and copying any and all documents or information associated with Contractor's and subcontractors' fleet including, without limitation, Certificates of Reported Compliance ("CRC"), fuel/refueling records, maintenance records, emissions records, and any other information the Contractor is required to produce, keep or maintain pursuant to the Regulation upon two (2) calendar days' notice from the City of Carlsbad.

Contractor shall be solely liable for any and all costs associated with complying with the Regulation as well as for any and all penalties, fines, damages, or costs associated with any and all violations, or failures to comply with the Regulation. Contractor shall defend, indemnify and hold harmless the City of Carlsbad, its officials (appointed and elected), officers, and employees from any claims, liabilities, costs, penalties or interest arising out of any failure or alleged failure to comply with the Regulation.

FLEET COMPLIANCE CERTIFICATION.

Bidder hereby acknowledges that they have reviewed the CARB's policies, rules and regulations and are familiar with the requirements of Title 13, California Code of Regulations, Division 3, Chapter 9, effective on January 1, 2024 (the "Regulation"). Bidder hereby certifies, subject to the penalty of perjury, that the option checked below relating to the Bidder's fleet, and/or that of their subcontractor(s) ("Fleet") is true and correct:

- ☐ The Fleet is subject to the requirements of the Regulation, and the appropriate Certificate(s) of Reported Compliance have been attached hereto.

- ☐ The Fleet is exempt from the Regulation under Section 2449.1(f)(2), and a signed description of the subject vehicles, and reasoning for exemption has been attached hereto.

- ☐ Bidder and/or their subcontractor is unable to procure R99 or R100 renewable diesel fuel as defined in the Regulation pursuant to Section 2449.1(f)(3). Bidder shall keep detailed records describing the normal refueling methods, their attempts to procure renewable diesel fuel and proof that shows they were not able to procure renewable diesel (i.e., third party correspondence or vendor bids).

- ☐ The Fleet is exempt from the requirements of the Regulation pursuant to Section 2449(i)(4) because this Project has been deemed an "emergency", as that term is defined in Section 2449(c)(18). Bidder shall only operate the exempted vehicles in the emergency situation and records of the exempted vehicles must be maintained, pursuant to Section 2449(i)(4).

- ☐ The Fleet does not fall under the Regulation or are otherwise exempt and a detailed reasoning is attached to this certification.

Name of Bidder:_____

Signature: _____

Name: _____

Title: _____

Date: _____

DocuSign Envelope ID: 22E0CD66-5F4E-491C-A1CF-7BC34D603F05

CONSTRUCTION PLANS

FOR

SEWER LIFT STATION UPGRADE PROGRAM

POINSETTIA LIFT STATION GENERATOR REPLACEMENT

PROJECT NO. 3840-23

NOVEMBER 2023

City of Carlsbad

CARLSBAD, CALIFORNIA

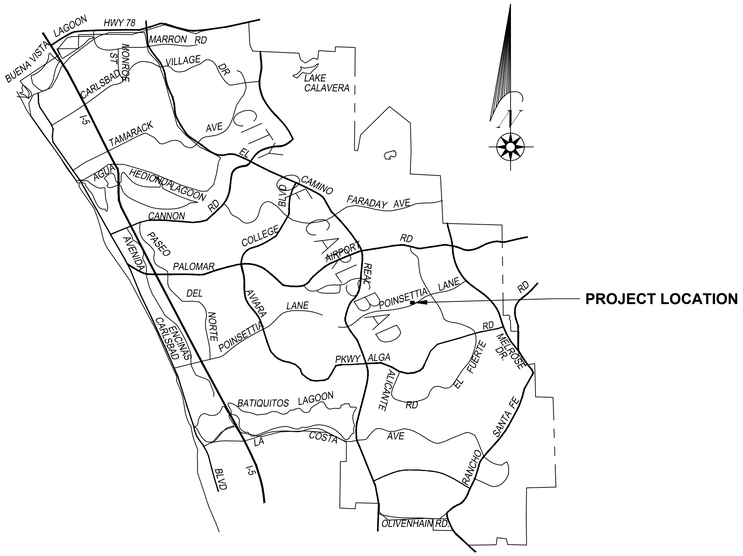

VICINITY MAP
NOT TO SCALE

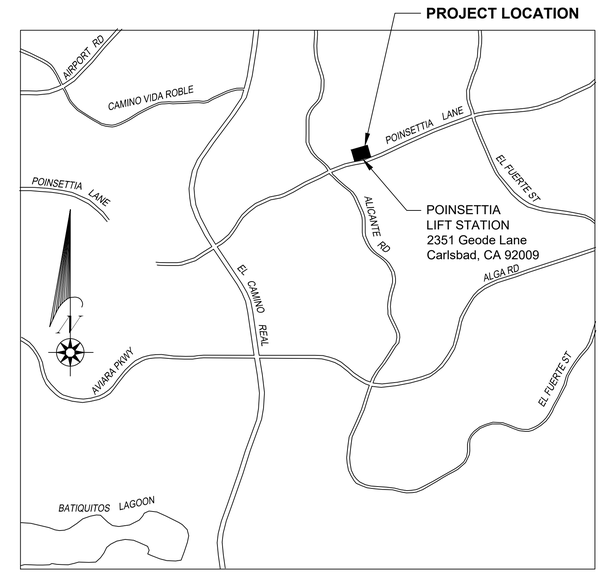

LOCATION MAP
NOT TO SCALE

SHEET INDEX

SHEET NUMBER	DESCRIPTION	DRAWING NUMBER
1	TITLE SHEET, LOCATION MAPS, AND SHEET INDEX	G-1
2	CSGBC NON-RESIDENTIAL CHECKLIST - I	G-2
3	CSGBC NON-RESIDENTIAL CHECKLIST - II	G-3
4	CSGBC NON-RESIDENTIAL CHECKLIST - III	G-4
5	CIVIL ABBREVIATIONS AND NOTES	C-1
6	CIVIL LEGEND	C-2
7	OVERALL SITE PLAN AND KEY MAP	C-3
8	CIVIL DEMO AND SITE PLAN	C-4
9	CIVIL GRADING AND UTILITY PLAN	C-5
10	CIVIL DETAILS	C-6
11	GENERAL ELECTRICAL ABBREVIATIONS AND NOTES	E-1
12	GENERAL ELECTRICAL LEGEND - I	E-2
13	GENERAL ELECTRICAL LEGEND - II	E-3
14	ELECTRICAL DEMOLITION DETAILS	E-4
15	ELECTRICAL SITE PLAN	E-5
16	SINGLE LINE DIAGRAM - DEMO AND REVISED	E-6
17	PANELBOARD SCHEDULE	E-7
18	GENERATOR BUILDING DEMOLITION AND MODIFIED PLANS	E-8
19	ELECTRICAL ROOM DEMOLITION AND MODIFIED PLANS	E-9
20	STANDARD ELECTRICAL DETAILS	E-10
21	GENERATOR BUILDING DEMOLITION AND MODIFIED PLANS/SECTION	M-1
22	GENERATOR BUILDING MECHANICAL DETAILS	M-2
23	STRUCTURAL GENERAL NOTES, ABBREVIATIONS, & SPECIAL INSPECTIONS	S-1
24	STRUCTURAL STANDARD DETAILS	S-2
25	STRUCTURAL GENERATOR ROOM FOUNDATION PLAN	S-3

CITY COUNCIL

KEITH BLACKBURN - MAYOR

MELANIE BURKHOLDER - COUNCIL MEMBER

CAROLYN LUNA - COUNCIL MEMBER

PRIYA BHAT-PATEL - MAYOR PRO TEM

TERESA ACOSTA - COUNCIL MEMBER

FACILITY INFORMATION		
CATEGORY/CRITERIA	GENERATOR/CHEMICAL STORAGE BUILDING	CONTROL/PUMP BUILDING
CONTRUCTION TYPE	TYPE II-B, PER CBC 602.2 SINGLE STORY, SLAB-ON-GRADE FLOOR, METAL ROOF OVER METAL FRAMING	TYPE II-B, PER CBC 602.2 SINGLE STORY, OVER BASEMENT MECHANICAL EQUIPMENT ROOM, SEPARATION TO BURIED SEWAGE WET WELL WITH MANHOLE ACCESS, METAL ROOF OVER METAL FRAMING
ALLOWABLE AREA	15,500 SF	15,500 SF
ACTUAL AREA	661 SF	1,170 SF
OCCUPANCY CLASSIFICATIONS	GENERATOR ROOM, 'F-1', 338 SF	CONTROL ROOM, 'F-1', 423 SF
	BLOWER ROOM, 'F-1',151 SF (NO NEW WORK)	LAVATORY, 'F-1', 40 SF (NO NEW WORK)
	CHEMICAL STORAGE ROOM, 'F-1', 172 SF (NO NEW WORK)	UTILITY ENCLOSURE, 'U', 43 SF (NO NEW WORK)
	-	PUMP ROOM (BASEMENT), 'F-1', 664 SF (NO NEW WORK)
	-	SEWAGE WET WELL, 'U', 251 SF (NO NEW WORK)
OCCUPANCY SEPARATIONS	PER NFPA 37, 1-HOUR SEPARATION REQUIRED AT GENERATOR ROOM TO ADJACENT SPACES	EXISTING 2-HOUR SEPARATIONS PROVIDED BETWEEN 'F-1' AND 'U' OCCUPANCIES
CHEMICAL STOAGE	DIESEL FUEL (CAS 000169-00-0), CLASS 2 COMBUSTIBLE LIQUID, 400 GALLONS - GENERATOR ROOM	(NONE)
	BIOXIDE®, AMMONIUM CALCIUM NITRATE SALT SOLUTION (CAS 15245-12-2), NO HAZARDOUS CLASSIFICATION 1500 GALLONS - CHEMICAL STORAGE ROOM	-

DECLARATION OF RESPONSIBLE CHARGE

I HEREBY DECLARE THAT I AM THE ENGINEER OF WORK FOR THIS PROJECT, THAT I HAVE EXERCISED RESPONSIBLE CHARGE OVER THE DESIGN OF THE PROJECT AS DEFINED IN SECTION 6703 OF THE BUSINESS AND PROFESSIONS CODE, AND THAT THE DESIGN IS CONSISTENT WITH CURRENT STANDARDS. I UNDERSTAND THAT THE CHECK OF PROJECT DRAWINGS AND SPECIFICATIONS BY THE CITY OF CARLSBAD DOES NOT RELIEVE ME AS ENGINEER OF WORK, OF MY RESPONSIBILITIES FOR THE PROJECT DESIGN.

KENNEDY/JENKS CONSULTANTS
9325 SKY PARK COURT, SUITE 300
SAN DIEGO, CA 92123
858-676-7500

BY: TIMOTHY WATERS DATE: 11-22-2023

R.C.E. NO.: C86080

REGISTRATION EXPIRATION DATE: 09/30/2024

REFERENCE DRAWINGS

DWG. NO.	DRAWING TITLE
331-1E	POINSETTIA SEWAGE LIFT STATION (1997)
451-2	POINSETTIA SEWAGE LIFT STATION UPGRADE (2007)
486-6	POINSETTIA LIFT STATION STANDBY PUMP SYSTEM (2017)
486-6A	POINSETTIA LIFT STATION HYDRAULIC SURGE PROTECTION (2020)

REFERENCED APPLICABLE CODES

2022 CALIFORNIA BUILDING CODE (CBC)
2022 CALIFORNIA ELECTRICAL CODE (CEC)
2022 CALIFORNIA FIRE CODE (CFC)
2022 CALIFORNIA MECHANICAL CODE (CMC)
2022 CALIFORNIA PLUMBING CODE (CPC)
2022 CALIFORNIA ENERGY CODE (CEnC)
2022 CALIFORNIA GREEN BUILDING STANDARDS CODE (CGBSC)

PROJECT NARRATIVE:

THE PROJECT INCLUDES THE REPLACEMENT OF A STANDBY ENGINE-GENERATOR INSTALLATION WITH A SUB-BASE FUEL TANK WITHIN THE CHEMICAL STORAGE/GENERATOR BUILDING AND THE REPLACEMENT OF AN AUTOMATIC TRANSFER SWITCH WITHIN THE CONTROL/PUMP STATION BUILDING.

THE PROJECT ALSO INCLUDES THE ADDITION OF A NEW MANUAL TRANSFER SWITCH AND ASSOCIATED CONDUIT AND WIRING OUTSIDE OF THE CHEMICAL STORAGE/GENERATOR BUILDING AND RECEPTACLE FOR INTERCONNECTION TO A PORTABLE GENERATOR. REROUTING OF EXIST UTILITIES, PATCHING OF PAVEMENT IS ALSO INCLUDED.

THE PROJECT ALSO INCLUDES REPLACEMENT EXHAUST AND VENT SYSTEM PIPING FOR THE ENGINE-GENERATOR AND FUEL TANK ASSEMBLY, REPLACEMENT LOUVERS AND EXHAUST VENTILATION SYSTEM FOR THE GENERATOR ROOM.

FINAL SUBMITTAL
(FOR CONSTRUCTION)

REGISTERED PROFESSIONAL ENGINEER TIMOTHY WATERS No. C86080 Exp. 9/30/24 CIVIL STATE OF CALIFORNIA
11/22/2023

Kennedy Jenks
9325 SKY PARK COURT, SUITE 300
SAN DIEGO, CA 92123
858-676-7500

SUBMITTED: TIMOTHY WATERS 11/22/2023
PROJECT MANAGER DATE

DATE	INITIAL	REVISION DESCRIPTION	DATE	INITIAL	DATE	INITIAL
ENGINEER OF WORK			OTHER APPROVAL		ACCEPTED	

G-1

SHEET 1 | CITY OF CARLSBAD UTILITIES DEPARTMENT | SHEETS 25

IMPROVEMENT PLAN FOR:
TITLE SHEET, LOCATION MAPS, AND SHEET INDEX
POINSETTIA LIFT STATION GENERATOR REPLACEMENT

ACCEPTED BY: DAVE PADILLA
Dave Padilla 12/19/2023
ENGINEERING MANAGER DATE

DWN BY: EA
CHKD BY: TW
RVWD BY: -

PROJECT NO. 3840-23

DRAWING NO. 540-9

DocuSign Envelope ID: 22E0CD66-5F4E-491C-A1CF-7BC34D603F05

CHAPTER 3
GREEN BUILDING
SECTION 301 GENERAL

301.1 SCOPE. Buildings shall be designed to include the green building measures specified as mandatory in the application checklists contained in this code. Voluntary green building measures are also included in the application checklists and may be included in the design and construction of structures covered by this code, but are not required unless adopted by a city, county, or city and county as specified in Section 101.7.

301.3 NONRESIDENTIAL ADDITIONS AND ALTERATIONS. [BSC-CG] The provisions of individual sections of Chapter 5 apply to newly constructed buildings, building additions of 1,000 square feet or greater, and/or building alterations with a permit valuation of $200,000 or above (for occupancies within the authority of California Building Standards Commission). Code sections relevant to additions and alterations shall only apply to the portions of the building being added or altered within the scope of the permitted work.

A code section will be designated by a banner to indicate where the code section only applies to newly constructed buildings [N] or to additions and/or alterations [A]. When the code section applies to both, no banner will be used.

301.3.1 Nonresidential additions and alterations that cause updates to plumbing fixtures only:

Note: On and after January 1, 2014, certain commercial real property, as defined in Civil Code Section 1101.3, shall have its noncompliant plumbing fixtures replaced with appropriate water-conserving plumbing fixtures under specific circumstances. See Civil Code Section 1101.1 *et seq.* for definitions, types of commercial real property affected, effective dates, circumstances necessitating replacement of noncompliant plumbing fixtures, and duties and responsibilities for ensuring compliance.

301.3.2 Waste Diversion. The requirements of Section 5.408 shall be required for additions and alterations whenever a permit is required for work.

301.4 PUBLIC SCHOOLS AND COMMUNITY COLLEGES. (see GBSC)
301.5 HEALTH FACILITIES. (see GBSC)

SECTION 302 MIXED OCCUPANCY BUILDINGS

302.1 MIXED OCCUPANCY BUILDINGS. In mixed occupancy buildings, each portion of a building shall comply with the specific green building measures applicable to each specific occupancy.

SECTION 303 PHASED PROJECTS

303.1 PHASED PROJECTS. For shell buildings and others constructed for future tenant improvements, only those code measures relevant to the building components and systems considered to be new construction (or newly constructed) shall apply.

303.1.1 Initial Tenant improvements. The provisions of this code shall apply only to the initial tenant improvements to a project. Subsequent tenant improvements shall comply with the scoping provisions in Section 301.3 non-residential additions and alterations.

ABBREVIATION DEFINITIONS:

HCD	Department of Housing and Community Development
BSC	California Building Standards Commission
DSA-SS	Division of the State Architect, Structural Safety
OSHPD	Office of Statewide Health Planning and Development
LR	Low Rise
HR	High Rise
AA	Additions and Alterations
N	New

CHAPTER 5
NONRESIDENTIAL MANDATORY MEASURES
DIVISION 5.1 PLANNING AND DESIGN

SECTION 5.101 GENERAL
5.101.1 SCOPE
The provisions of this chapter outline planning, design and development methods that include environmentally responsible site selection, building design, building siting and development to protect, restore and enhance the environmental quality of the site and respect the integrity of adjacent properties.

SECTION 5.102 DEFINITIONS
5.102.1 DEFINITIONS
The following terms are defined in Chapter 2 *(and are included here for reference)*

CUTOFF LUMINAIRES. Luminaires whose light distribution is such that the candela per 1000 lamp lumens does not numerically exceed 25 (2.5 percent) at an angle of 90 degrees above nadir, and 100 (10 percent) at a vertical angle of 80 degrees above nadir. This applies to all lateral angles around the luminaire.

LOW-EMITTING AND FUEL EFFICIENT VEHICLES.
Eligible vehicles are limited to the following:

1. Zero emission vehicle (ZEV), enhanced advanced technology PZEV (enhanced AT ZEV) or transitional zero emission vehicles (TZEV) regulated under CCR, Title 13, Section 1962.
2. High-efficiency vehicles, regulated by U.S. EPA, bearing a fuel economy and greenhouse gas rating od 9 oe 10 as regulated under 40 CFR Section 600 Subpart D.

NEIGHBORHOOD ELECTRIC VEHICLE (NEV). A motor vehicle that meets the definition of "low-speed vehicle" either in Section 385.5 of the Vehicle Code or in 49CFR571.500 (as it existed on July 1, 2000), and is certified to zero-emission vehicle standards.

TENANT-OCCUPANTS. Building occupants who inhabit a building during its normal hours of operation as permanent occupants, such as employees, as distinguished from customers and other transient visitors.

VANPOOL VEHICLE. Eligible vehicles are limited to any motor vehicle, other than a motortruck or truck tractor, designed for carrying more than 10 but not more than 15 persons including the driver, which is maintained and used primarily for the nonprofit work-related transportation of adults for the purpose of ridesharing.

Note: Source: Vehicle Code, Division 1, Section 668

ZEV. Any vehicle certified to zero-emission standards.

SECTION 5.106 SITE DEVELOPMENT
5.106.1 STORM WATER POLLUTION PREVENTION FOR PROJECTS THAT DISTURB LESS THAN ONE ACRE OF LAND. Newly constructed projects and additions which disturb less than one acre of land, and are not part of a larger common plan of development or sale, shall prevent the pollution of storm water runoff from the construction activities through one or more of the following measures:

5.106.1.1 Local ordinance. Comply with a lawfully enacted storm water management and/or erosion control ordinance.

5.106.1.2 Best Management Practices (BMPs). Prevent the loss of soil through wind or water erosion by implementing an effective combination of erosion and sediment control and good housekeeping BMPs.

1. Soil loss BMPs that should be considered for implementation as appropriate for each project include, but are not limited to, the following:
   a. Scheduling construction activity during dry weather, when possible.
   b. Preservation of natural features, vegetation, soil, and buffers around surface waters.
   c. Drainage swales or lined ditches to control stormwater flow.
   d. Mulching or hydroseeding to stabilize disturbed soils.
   e. Erosion control to protect slopes.
   f. Protection of storm drain inlets (gravel bags or catch basin inserts).
   g. Perimeter sediment control (perimeter silt fence, fiber rolls).
   h. Sediment trap or sediment basin to retain sediment on site.
   i. Stabilized construction exits.
   j. Wind erosion control.
   k. Other soil loss BMPs acceptable to the enforcing agency.
2. Good housekeeping BMPs to manage construction equipment, materials, non-stormwater discharges and wastes that should be considered for implementation as appropriate for each project include, but are not limited to, the following:
   a. Dewatering activities.
   b. Material handling and waste management.
   c. Building materials stockpile management.
   d. Management of washout areas (concrete, paints, stucco, etc.).
   e. Control of vehicle/equipment fueling to contractor's staging area.
   f. Vehicle and equipment cleaning performed off site.
   g Spill prevention and control.
   h. Other housekeeping BMPs acceptable to the enforcing agency.

5.106.2 STORMWATER POLLUTION PREVENTION FOR PROJECTS THAT DISTURB ONE OR MORE ACRES OF LAND. Comply with all lawfully enacted stormwater discharge regulations for projects that (1) disturb one acre or more of land, or (2) disturb less than one acre of land but are part of a larger common plan of development sale.

Note: Projects that (1) disturb one acre or more of land, or (2) disturb less than one acre of land but are part of the larger common plan of development or sale must comply with the post-construction requirements detailed in the applicable National Pollutant Discharge Elimination System (NPDES) General permit for Stormwater Discharges Associated with Construction and Land Disturbance Activities issued by the State Water Resources Control Board or the Lahontan Regional Water Quality Control Board (for projects in the Lake Tahoe Hydrologic Unit).

The NPDES permits require postconstruction runoff (post-project hydrology) to match the preconstruction runoff (pre-project hydrology) with the installation of postconstruction stormwater management measures. The NPDES permits emphasize runoff reduction through on-site stormwater use, interception, evapotranspiration, and infiltration through nonstructural controls, such as Low Impact Development (LID) practices, and conversation design measures. Stormwater volume that cannot be addressed using nonstructural practices is required to be captured in structural practices and be approved by the enforcing agency.

Refer to the current applicable permits on the State Water Resources Control Board website at: www.waterboards.ca.gov/constructionstormwater. Consideration to the stormwater runoff management measures should be given during the initial design process for appropriate integration into site development.

5.106.4 BICYCLE PARKING. For buildings within the authority of California Building Standards Commission as specified in Section 103, comply with Section 5.106.4.1. For buildings within the authority of the Division of the State Architect pursuant to Section 105, comply with Section 5.106.4.2

5.106.4.1 Bicycle parking. [BSC-CG] Comply with Sections 5.106.4.1.1 and 5.106.4.1.2; or meet the applicable local ordinance, whichever is stricter.

5.106.4.1.1 Short-term bicycle parking. If the new project or an addition or alteration is anticipated to generate visitor traffic, provide permanently anchored bicycle racks within 200 feet of the visitors' entrance, readily visible to passers-by, for 5% of new visitor motorized vehicle parking spaces being added, with a minimum of one two-bike capacity rack.
Exception: Additions or alterations which add nine or less visitor vehicular parking spaces.

5.106.4.1.2 Long-term bicycle parking. For new buildings with tenant spaces that have 10 or more tenant-occupants, provide secure bicycle parking for 5 percent of the tenant-occupant vehicular parking spaces with a minimum of one bicycle parking facility.

5.106.4.1.3 For additions or alterations that add 10 or more tenant-occupant vehicular parking spaces, provide secure bicycle parking for 5 percent of the tenant vehicular parking spaces being added, with a minimum of one bicycle parking facility.

5.106.4.1.4 For new shell buildings in phased projects provide secure bicycle parking for 5 percent of the anticipated tenant-occupant vehicular parking spaces with a minimum of one bicycle parking facility.

5.106.4.1.5 Acceptable bicycle parking facility for Sections 5.106.4.1.2, 5.106.4.1.3, and 5.106.4.1.4 shall be convenient from the street and shall meet one of the following:

1. Covered, lockable enclosures with permanently anchored racks for bicycles;
2. Lockable bicycle rooms with permanently anchored racks; or
3. Lockable, permanently anchored bicycle lockers.

Note: Additional information on recommended bicycle accommodations may be obtained from Sacramento Area Bicycle Advocates.

5.106.4.2 Bicycle parking. [DSA-SS] For public schools and community colleges, comply with Sections 5.106.4.2.1 and 5.106.4.2.2

5.106.4.2.1 Student bicycle parking. Provide permanently anchored bicycle racks conveniently accessed with a minimum of four two-bike capacity racks per new building.
5.106.4.2.2 Staff bicycle parking. Provide permanent, secure bicycle parking conveniently accessed with a minimum of two staff bicycle parking spaces per new building. Acceptable bicycle parking facilities shall be convenient from the street or staff parking area and shall meet one of the following:

1. Covered, lockable enclosures with permanently anchored racks for bicycles;
2. Lockable bicycle rooms with permanently anchored racks; or
3. Lockable, permanently anchored bicycle lockers.

5.106.5.3 Electric vehicle (EV) charging .[N] Construction to provide electric vehicle infrastructure and facilitate electric vehicle charging shall comply with Section 5.106.5.3.1 and shall be provided in accordance with regulations in the California Building Code and the California Electrical Code.

Exceptions:
1. On a case-by-case basis where the local enforcing agency has determined compliance with this section is not feasible based upon one of the following conditions:
   a. Where there is no local utility power supply
   b. Where the local utility is unable to supply adequate power.
   c. Where there is evidence suitable to the local enforcement agency substantiating the local utility infrastructure design requirements, directly related to the implementation of Section 5.106.5.3, may adversely impact the construction cost of the project.
2. Parking spaces accessible only by automated mechanical car parking systems are not required to comply with this code section

5.106.5.3.1 EV capable spaces.
[N] EV capable spaces shall be provided in accordance with Table 5.106.5.3.1 and the following requirements:
1. Raceways complying with the California Electrical Code and no less that 1-inch (25 mm) diameter shall be provided and shall originate at a service panel or a subpanel(s) serving the area, and shall terminate in close proximity to the proposed location of the EV capable and into a suitable listed cabinet, box,enclosure or equivalent. A common raceway may be used to serve multiple EV charging spaces.
2. A service panel or subpanel (s) shall be provided with panel space and electrical load capacity for a dedicated 208/240 volt, 40-ampere minimum branch circuit for each EV capable space, with delivery of 30-ampere minimum to an installed EVSE at each EVCS.
3. The electrical system and any on-site distribution transformers shall have sufficient capacity to supply full rated amperage at each EV capable space.
4. The service panel or subpanel circuit directory shall identify the reserved overcurrent protective devices space(s) as "EV CAPABLE". The raceway termination location shall be permanently and visibly marked as "EV CAPABLE."

Note: A parking space served by electric vehicle supply equipment or designed as a future EV charging space shall count as at least one standard automobile parking space only for the purpose of complying with any applicable minimum parking space requirements established by an enforcement agency. See vehicle Code Section 22511.2 for further details.

TABLE 5.106.5.3.1

TOTAL NUMBER OF ACTUAL PARKING SPACES	NUMBER OF REQUIRED EV CAPABLE SPACES	NUMBER OF EVCS (EV CAPABLE SPACES PROVIDED WITH EVSE)^2
0-9	0	0
10-25	2	0
26-50	8	2
51-75	13	3
76-100	17	4
101-150	25	6
151-200	35	9
201 AND OVER	20% of total[1]	25% of EV capable spaces[1]

1. Where there is insufficient electrical supply.
2. The number of required EVCS (EV capable spaces provided with EVSE) in column 3 count towards the total number of required EV capable spaces shown in column 2.

5.106.5.3.2 Electric vehicle charging stations (EVCS)
EV capable spaces shall be provided with EVSE to create EVCS in the number indicated in Table 5.106.5.3.1. The EVCS required by Table 5.106.5.3.1 may be provided with EVSE in any combination of Level 2 and Direct Current Fast Charging (DCFC), except that at least one Level 2 EVSE shall be provided.

One EV charger with multiple connectors capable of charging multiple EVs simultaneously shall be permitted if the electrical load capacity required by Section 5.106.5.3.1 for each EV capable space is accumulatively supplied to the EV charger.

The installation of each DCFC EVSE shall be permitted to reduce the minimum number of required EV capable spaces without EVSE by five and reduce proportionally the required electrical load capacity to the service panel or subpanel.

5.106.5.3.3 Use of automatic load management systems (ALMS).
ALMS shall be permitted for EVCS. When ALMS is installed, the required electrical load capacity specified in Section
5.106.5.3.1 for each EVCS may be reduced when serviced by an EVSE controlled by an ALMS. Each EVSE controlled by an ALMS shall deliver a minimum 30 amperes to an EV when charging one vehicle and shall deliver a minimum 3.3 kW while simultaneously charging multiple EVs.

5.106.5.3.4 Accessible EVCS.
When EVSE is installed, accessible EVSC shall be provided in accordance with the *California Building Code*, Chapter 11B, Section 11B-228.3.
Note: For EVCS signs, refer to Caltrans Traffic Operations Policy Directive 13-01 (Zero Emission Vehicle Signs and Pavement Markings) or its successor(s).

5.106.5.4 Electric Vehicle (EV) charging: medium-duty and heavy-duty. [N]
Construction shall comply with section 5.106.5.4.1 to facilitate future installation of electric vehicle supply equipment (EVSE). Construction for warehouses, grocery stores and retail stores with planned off-street loading spaces shall also comply with Section 5.106.5.4.1 for future installation of medium- and heavy-duty EVSE.
Exceptions:
1. On a case-by-case basis where the local enforcing agency has determined compliance with this section is not feasible based upon one of the following conditions:
   a. Where there is no local utility power supply.
   b. Where the local utility is unable to supply adequate power.
   c. Where there is evidence suitable to the local enforcing agency substantiating that additional local utility infrastructure design requirements, directly related to the implementation of Section 5.106.5.3, may adversely impact the construction cost of the project.

When EVSE(s) is/are installed, it shall be in accordance with the *California Building Code*, the *California Electrical Code* and as follows:

5.106.5.4.1 Electric vehicle charging readiness requirements for warehouse, grocery stores and retail stores with planned off-street loading spaces.
[N] In order to avoid future demolition when adding EV charging supply and distribution equipment, spare raceways(s) or busway(s) and adequate capacity for transformer(s), service panel(s) or subpanel(s) shall be installed at the time of construction in accordance with the California Electrical Code. Construction plans and specifications shall include but are not limited to, the following:
1. The transformer, main service equipment and subpanel shall meet the minimum power requirement in Table 5.106.5.4.1 to accommodate the dedicated branch circuits for the future installation of EVSE.
2. The construction documents shall indicate on or more location(s) convenient to the planned offstreet loading space(s) reserved for medium-and heavy-duty ZEV charging cabinets and charging dispensers, and a pathway reserved for routing of conduit from the termination of the raceway(s) or busway(s) to the charging cabinet(s) and dispenser(s) as shown in Table 5.106.5.4.1
3. Raceway(s) or busway(s) originating at a main service panel or a subpanel(s) serving the area where potential future medium-and heavy-duty EVSE will be located and shall terminate in close proximity to the potential future location of the charging equipments for medium- and heavy-duty vehicles.
4. The raceway(s) or busway(s) shall be sufficient size to carry the minimum additional system load to the future location of the charging for medium- and heavy-duty ZEVs as shown in Table 5.106.5.4.1.

TABLE 5.106.5.4.1 RACEWAY CONDUIT AND PANEL POWER REQUIREMENTS FOR MEDIUM- AND HEAVY-DUTY EVSE [N]

BUILDING TYPE	BUILDING SIZE (SQ. FT.)	NUMBER OF OFF-STREET LOADING SPACES	ADDITIONAL CAPACITY REQUIRED (KVA) FOR RACEWAY & BUSWAY AND TRANSFORMER & PANEL
Grocery	10,000 to 90,000	1 or 2	200
		3 or Greater	400
	Greater than 90,000	1 or Greater	400
Retail	10,000 to 135,000	1 or 2	200
		3 or Greater	400
	Greater than 135,000	1 or Greater	400
Warehouse	20,000 to 256,000	1 or 2	200
		3 or Greater	400
	Greater than 256,000	1 or Greater	400

5.106.8 LIGHT POLLUTION REDUCTION. [N]. I Outdoor lighting systems shall be designed and installed to comply with the following:

1. The minimum requirements in the California Energy Code for Lighting Zones 0-4 as defined in Chapter 10, Section 10-114 of the California Administrative Code; and
2. Backlight (B) ratings as defined in IES TM-15-11 (shown in Table A-1 in Chapter 8);
3. Uplift and Glare ratings as defined in California Energy Code (shown in Tables 130.2-A and 130.2-B in Chapter 8) and
4. Allowable BUG ratings not exceeding those shown in Table 5.106.8, [N] or Comply with a local ordinance lawfully enacted pursuant to Section 101.7, whichever is more stringent.

Exceptions: [N]

1. Luminaires that qualify as exceptions in Sections 130.2 (b) and 140.7 of the California Energy Code.
2. Emergency lighting.
3. Building facade meeting the requirements in Table 140.7-B of the California Energy Code, Part 6.
4. Custom lighting features as allowed by the local enforcing agency, as permitted by Section 101.8 Alternate materials, designs and methods of construction.
5. Luminaires with less than 6,200 initial luminaire lumens.

TABLE 5.106.8 [N] MAXIMUM ALLOWABLE BACKLIGHT, UPLIGHT AND GLARE (BUG) RATINGS [1,2]

ALLOWABLE RATING	LIGHTING ZONE LZ0	LIGHTING ZONE LZ1	LIGHTING ZONE LZ2	LIGHTING ZONE LZ3	LIGHTING ZONE LZ4
MAXIMUM ALLOWABLE BACKLIGHT RATING .					
Luminaire greater than 2 mounting heights (MH) from property line	N/A	No Limit	No Limit	No Limit	No Limit
Luminaire back hemisphere is 1-2 MH from property line	N/A	B2	B3	B4	B4
Luminaire back hemisphere is 0.5-1 MH from property line	N/A	B1	B2	B3	B3
Luminaire back hemisphere is less than 0.5 MH from property line	N/A	B0	B0	B1	B2
MAXIMUM ALLOWABLE UPLIGHT RATING (U)					
For area lighting [3]	N/A	U0	U0	U0	U0
For all other outdoor lighting,including decorative luminaires	N/A	U1	U2	U3	UR
MAXIMUM ALLOWABLE GLARE RATING [3] (G)					
MAXIMUM ALLOWABLE GLARE RATING [3] (G)	N/A	G1	G2	G3	G4
MAXIMUM ALLOWABLE GLARE RATING [3] (G)	N/A	G0	G1	G1	G2
MAXIMUM ALLOWABLE GLARE RATING [3] (G)	N/A	G0	G0	G1	G1
MAXIMUM ALLOWABLE GLARE RATING [3] (G)	N/A	G0	G0	G0	G1

1. IESNA Lighting Zones 0 and 5 are not applicable; refer to Lighting Zones as defined in the *California Energy Code* and Chapter 10 of the *California Administrative Code*.

2. For property lines that abut public walkways, bikeways, plazas and parking lots, the property line may be considered to be 5 feet beyond the actual property line for purpose of determining compliance with this section. For property lines that abut public roadways and public transit corridors, the property line may be considered to be the centerline of the public roadway or public transit corridor for the purpose of determining compliance with this section.

3. General lighting luminaires in areas such as outdoor parking, sales or storage lots shall meet these reduced ratings. Decorative luminaries located in these areas shall meet *U*-value limits for "all other outdoor lighting"

5.106.8.1 Facing- Backlight
Luminaries within 2MH of a property line shall be oriented so that the nearest property line is behind the fixture, and shall comply with the backlight rating specified in Table 5.106.8 based on the lighting zone and distance to the nearest point of that property line.
Exception: Corners. If two property lines (or two segments of the same property line) have equidistant point to the luminaire, then the luminaire may be oriented so that the intersection of the two lines (the corner) is directly behind the luminaire. The luminaire shall still use the distance to the nearest points(s) on the property lines to determine the required backlight rating.

5.106.8.2 Facing-Glare.
For luminaires covered by 5.106.8.1, if a property line also exists within or extends into the front hemisphere within 2MH of the luminaire then the luminaire shall comply with the more stringent glare rating specified in Table 5.106.8 based on the lighting zone and distance to the nearest point on the nearest property line within the front hemisphere.

Note: [N]
1.See also *California Building Code*, Chapter 12, Section 1205.6 for college campus lighting requirements for parking facilities and walkways.
2.Refer to Chapter 8 (Compliance Forms, Worksheets and Reference Material) for IES TM-15-11 Table A-1, *California Energy Code* Tables 130.2-A and 130.2-B.
3. Refer to the *California Building Code* for requirements for additions and alterations.

5.106.10 GRADING AND PAVING. Construction plans shall indicate how site grading or a drainage system will manage all surface water flows to keep water from entering buildings. Examples of methods to manage surface water include, but are not limited to, the following:

1. Swales.
2. Water collection and disposal systems.
3. French drains.
4. Water retention gardens.
5. Other water measures which keep surface water away from buildings and aid in groundwater recharge.
Exception: Additions and alterations not altering the drainage path.

5.106.12 SHADE TREES [DSA-SS]. Shade Trees shall be planted to comply with Sections 5.106.12.1, 5.106.12.2, and 5.106.12.3. Percentages shown shall be measured at noon on the summer solstice. Landscape irrigation necessary to establish and maintain tree health shall comply with Section 5.304.6.

5.106.12.1 Surface parking areas. Shade tree plantings, minimum #10 container size or equal, shall be installed to provide shade over 50 percent of the parking area within 15 years.

Exceptions: Surface parking area covered by solar photovoltaic shade structures with roofing materials that comply with Table A5.106.11.2.2 in Appendix A5 shall be permitted in whole or in part in lieu of shade tree planting.

5.106.12.2 Landscape areas. Shade tress plantings, minimum #10 container size or equal shall be installed to provide shade of 20% of the landscape area within 15 years.

Exceptions: Playfields for organized sport activity are not included in the total area calculation.

5.106.12.3. Hardscape areas. Shade tree plantings, minimum #10 container size or equal shall be installed to provide shade over 20 percent of the hardscape area within 15 years.

Exceptions:
1. Walks, hardscape areas covered by solar photovoltaic shade structures or shade structures with roofing materials that comply with Table A5.106.11.2.2 in Appendix A5 shall be permitted in whole or in part in lieu of shade tree planting.
2. Designated and marked play areas of organized sport activity are not included in the total area calculation.

DIVISION 5.2 ENERGY EFFICIENCY
SECTION 5.201 GENERAL
5.201.1 Scope [BSC-CG], ***California Energy Code [DSA-SS].*** For the purposes of mandatory energy efficiency standards in this code, the California Energy Commission will continue to adopt mandatory building standards.

DIVISION 5.3 WATER EFFICIENCY AND CONSERVATION
SECTION 5.301 GENERAL
5.301.1 Scope. The provisions of this chapter shall establish the means of conserving water use indoors, outdoors and in wastewater conveyance.

SECTION 5.302 DEFINITIONS
5.302.1 Definitions. The following terms are defined in Chapter 2 *(and are included here for reference)*

EVAPOTRANSPIRATION ADJUSTMENT FACTOR (ETAF) [DSA-SS]. An adjustment factor when applied to reference evapotranspiration that adjusts for plant factors and irrigation efficiency, which ae two major influences on the amount of water that needs to be applied to the landscape.

FOOTPRINT AREA [DSA-SS]. The total area of the furthest exterior wall of the structure projected to natural grade, not including exterior areas such as stairs, covered walkways, patios and decks.

METERING FAUCET. A self-closing faucet that dispenses a specific volume of water for each actuation cycle. The volume or cycle duration can be fixed or adjustable.

GRAYWATER. Pursuant to Health and Safety Code Section 17922.12, "graywater" means untreated wastewater that has not been contaminated by any toilet discharge, has not been affected by infectious, contaminated, or unhealthy bodily wastes, and does not present a threat from contamination by unhealthful processing, manufacturing, or operating wastes. "Graywater" includes, but is not limited to wastewater from bathtubs, showers, bathroom washbasins, clothes washing machines and laundry tubs, but does not include waste water from kitchen sinks or dishwashers.

MODEL WATER EFFICIENT LANDSCAPE ORDINANCE (MWELO). The California ordinance regulating landscape design, installation and maintenance practices that will ensure commercial, multifamily and other developer installed landscapes greater than 2500 square feet meet an irrigation water budget developed based on landscaped area and climatological parameters.

MODEL WATER EFFICIENT LANDSCAPE ORDINANCE (MWELO). [HCD] The California model ordinance (California Code of Regulations, Title 23, Division 2, Chapter 2.7), regulating landscape design, installation and maintenance practices. Local agencies are required to adopt the updated MWELO, or adopt a local ordinance at least as effective as the MWELO.

POTABLE WATER. Water that is drinkable and meets the U.S. Environmental Protection Agency (EPA) Drinking Water Standards. See definition in the California Plumbing Code, Part 5.

POTABLE WATER. [HCD] Water that is satisfactory for drinking, culinary, and domestic purposes, and meets the U.S. Environmental Protection Agency (EPA) Drinking Water Standards and the requirements of the Health Authority Having Jurisdiction.

RECYCLED WATER. Water which, as a result of treatment of waste, is suitable for a direct beneficial use or a controlled use that would not otherwise occur [Water Code Section 13050 (n)]. Simply put, recycled water is water treated to remove waste matter attaining a quality that is suitable to use the water again.

SUBMETER. [HCD 1] A secondary device beyond a meter that measures water consumption of an individual rental unit within a multiunit residential structure or mixed-use residential and commercial structure. (See Civic Code Section 1954.202 (g) and Water code Section 517 for additional details.)

WATER BUDGET. Is the estimated total landscape irrigation water use which shall not exceed the maximum applied water allowance calculated in accordance with the Department of Water Resources Model Efficient Landscape Ordinance (MWELO).

Y = YES
N/A = NOT APPLICABLE
RESPON. PARTY = RESPONSIBLE PARTY (ie: ARCHITECT, ENGINEER, OWNER, CONTRACTOR, INSPECTOR ETC.)
DOC. REF. = DOCUMENT REFERENCE

DISCLAIMER:*THIS DOCUMENT IS PROVIDED AND INTENDED TO BE USED AS A MEANS TO INDICATE AREAS OF COMPLIANCE WITH THE CALIFORNIA GREEN BUILDING STANDARDS (CALGREEN) CODE. DUE TO THE VARIABLES BETWEEN BUILDING DEPARTMENT JURISDICTIONS, THIS CHECKLIST IS TO BE USED ON AN INDIVIDUAL PROJECT BASIS AND MAY BE MODIFIED BY THE END USER TO MEET THOSE INDIVIDUAL NEEDS. THE END USER ASSUMES ALL RESPONSIBILITY ASSOCIATED WITH THE USE OF THIS DOCUMENT, INCLUDING VERIFICATION WITH THE FULL CODE.*

G-2

2022 CALIFORNIA GREEN BUILDING STANDARDS CODE
NONRESIDENTIAL MANDATORY MEASURES, SHEET 1 (January 2023)

FINAL SUBMITTAL
(FOR CONSTRUCTION)

REGISTERED PROFESSIONAL ENGINEER
JAMES ALGERY BRAMMER
No. M28906
Exp. 6/30/24
CIVIL
STATE OF CALIFORNIA
11/22/2023

Kennedy Jenks
9325 SKY PARK COURT, SUITE 300
SAN DIEGO, CA 92123
858-676-7500

SUBMITTED: TIMOTHY WATERS 11/22/2023
PROJECT MANAGER DATE

DATE	INITIAL	REVISION DESCRIPTION	DATE	INITIAL	DATE	INITIAL
ENGINEER OF WORK			OTHER APPROVAL		ACCEPTED	

SHEET 2 | CITY OF CARLSBAD UTILITIES DEPARTMENT | SHEETS 25

IMPROVEMENT PLAN FOR:
CSGBC
NON-RESIDENTIAL CHECKLIST - I
POINSETTIA LIFT STATION GENERATOR REPLACEMENT

ACCEPTED BY: *DAVE PADILLA*
Dave Padilla 12/19/2023
ENGINEERING MANAGER DATE

DWN BY: EA
CHKD BY: ZDH
RVWD BY: TW

PROJECT NO. 3840-23
DRAWING NO. 540-9

DocuSign Envelope ID: 22E0CD66-5F4E-491C-A1CF-7BC34D603F05

Y	N/A	RESPON. PARTY	DOC. REF.

SECTION 5.303 INDOOR WATER USE

5.303.1 METERS. Separate submeters or metering devices shall be installed for the uses described in Sections 503.1.1 and 503.1.2.

5.303.1.1 Buildings in excess of 50,000 square feet. Separate submeters shall be installed as follows:

1. For each individual leased, rented or other tenant space within the building projected to consume more than 100 gal/day (380 L/day), including, but not limited to, spaces used for laundry or cleaners, restaurant or food service, medical or dental office, laboratory, or beauty salon or barber shop.
2. Where separate submeters for individual building tenants are unfeasible, for water supplied to the following subsystems:
   a. Makeup water for cooling towers where flow through is greater than 500 gpm (30 L/s).
   b. Makeup water for evaporative coolers greater than 6 gpm (0.04 L/s).
   c. Steam and hot water boilers with energy input more than 500,000 Btu/h (147 kW).

5.303.1.2 Excess consumption. A separate submeter or metering device shall be provided for any tenant within a new building or within an addition that is projected to consume more than 1,000 gal/day.

5.303.3 WATER CONSERVING PLUMBING FIXTURES AND FITTINGS. Plumbing fixtures (water closets and urinals) and fittings (faucets and showerheads) shall comply with the following:

5.303.3.1 Water Closets. The effective flush volume of all water closets shall not exceed 1.28 gallons per flush. Tank-type water closets shall be certified to the performance criteria of the U.S. EPA WaterSense Specification for Tank-Type toilets.

Note: The effective flush volume of dual flush toilets is defined as the composite, average flush volume of two reduced flushes and one full flush.

5.303.3.2 Urinals.
5.303.3.2.1 Wall-mounted Urinals. The effective flush volume of wall-mounted urinals shall not exceed 0.125 gallons per flush.

5.303.3.2.2 Floor-mounted Urinals. The effective flush volume of floor-mounted or other urinals shall not exceed 0.5 gallons per flush.

5.303.3.3 Showerheads. [BSC-CG]
5.303.3.3.1 Single showerhead. Showerheads shall have a maximum flow rate of not more than 1.8 gallons per minute at 80 psi. Showerheads shall be certified to the performance criteria of the U.S. EPA WaterSense Specification for Showerheads.

5.303.3.3.2 Multiple showerheads serving one shower. When a shower is served by more than one showerhead, the combined flow rate of all the showerheads and/or other shower outlets controlled by a single valve shall not exceed 1.8 gallons per minute at 80 psi, or the shower shall be designed to allow only one shower outlet to be in operation at a time.
Note: A hand-held shower shall be considered a showerhead.

5.303.3.4 Faucets and fountains.

5.303.3.4.1 Nonresidential Lavatory faucets. Lavatory faucets shall have a maximum flow rate of not more than 0.5 gallons per minute at 60 psi.

5.303.3.4.2 Kitchen faucets. Kitchen faucets shall have a maximum flow rate of not more than 1.8 gallons per minute at 60 psi. Kitchen faucets may temporarily increase the flow above the maximum rate, but not to exceed 2.2 gallons per minute at 60 psi, and must default to a maximum flow rate of 1.8 gallons per minute at 60 psi.

5.303.3.4.3 Wash fountains. Wash fountains shall have a maximum flow rate of not more than1.8 gallons per minute/20 [rim space (inches) at 60 psi].

5.303.3.4.4 Metering faucets. Metering faucets shall not deliver more than 0.20 gallons per cycle.

5.303.3.4.5 Metering faucets for wash fountains. Metering faucets for wash fountains shall have a maximum flow rate of not more than 0.20 gallons per minute/20 [rim space (inches) at 60 psi].

Note: Where complying faucets are unavailable, aerators or other means may be used to achieve reduction.

5.303.3.4.6 Pre-rinse spray value
When installed, shall meet the requirements in the *California Code of Regulations*, Title 20 (Appliance Efficiency Regulations), Section 1605.1 (h)(4) Table H-2, Section 1605.3 (h)(4)(A), and Section 1607 (d)(7), and shall be equipped with an integral automatic shutoff.

FOR REFERENCE ONLY: The following table and code section have been reprinted from the *California Code of Regulations*, Title 20 (Appliance Efficiency Regulations), Section 1605.1 (h)(4) and Section 1605.3 (h)(4)(A).

TABLE H-2

STANDARDS FOR COMMERCIAL PRE-RINSE SPRAY VALUES MANUFACTURED ON OR AFTER JANUARY 28, 2019

PRODUCT CLASS [spray force in ounce force (ozf)]	MAXIMUM FLOW RATE (gpm)
Product Class 1 (≤ 5.0 ozf)	1.00
Product Class 2 (> 5.0 ozf and ≤ 8.0 ozf)	1.20
Product Class 3 (> 8.0 ozf)	1.28

5.303.4 COMMERCIAL KITCHEN EQUIPMENT.

5.303.4.1 Food Waste Disposers. Disposers shall either modulate the use of water to no more than 1 gpm when the disposer is not in use (not actively grinding food waste/no-load) or shall automatically shut off after no more than 10 minutes of inactivity. Disposers shall use no more than 8 gpm of water.
Note: This code section does not affect local jurisdiction authority to prohibit or require disposer installation.

5.303.5 AREAS OF ADDITION OR ALTERATION. For those occupancies within the authority of the California Building Standards Commission as specified in Section 103, the provisions of Section 5.303.3 and 5.303.4 shall apply to new fixtures in additions or areas of alteration to the building.

5.303.6 STANDARDS FOR PLUMBING FIXTURES AND FITTINGS. Plumbing fixtures and fittings shall be installed in accordance with the *California Plumbing Code*, and shall meet the applicable standards referenced in Table 1701.1 of the *California Plumbing Code* and in Chapter 6 of this code.

SECTION 5.304 OUTDOOR WATER USE

5.304.1 OUTDOOR POTABLE WATER USE IN LANDSCAPE AREAS. Nonresidential developments shall comply with a local water efficient landscape ordinance or the current California Department of Water Resources' Model Water Efficient Landscape Ordinance (MWELO), whichever is more stringent.

Notes:
1. The Model Water Efficient Landscape Ordinance (MWELO) is located in the California Code of Regulations, Title 23, Chapter 2.7, Division 2.
2. MWELO and supporting documents, including a water budget calculator, are available at: https://www.water.ca.gov/.

5.304.6 OUTDOOR POTABLE WATER USE IN LANDSCAPE AREAS. For public schools and community colleges, landscape projects as described in Sections 5.304.6.1 and 5.304.6.2 shall comply with the California Department of Water Resources Model Water Efficient Landscape Ordinance (MWELO) commencing with Section 490 of Chapter 2.7, Division 2, Title 23, *California Code of Regulations*, except that the evapotranspiration adjustment factor (ETAF) shall be 0.65 with an additional water allowance for special landscape areas (SLA) of 0.35.

Exception: Any project with an aggregate landscape area of 2,500 square feet or less may comply with the prescriptive measures contained in Appendix D of the MWELO.

5.304.6.1 Newly constructed landscapes. New construction projects with an aggregate landscape area equal to or greater than 500 square feet.

5.304.6.2 Rehabilitated landscapes. Rehabilitated landscape projects with an aggregate landscape area equal to or greater than 1,200 square feet.

DIVISION 5.4 MATERIAL CONSERVATION AND RESOURCE EFFICIENCY

SECTION 5.401 GENERAL

5.401.1 SCOPE. The provisions of this chapter shall outline means of achieving material conservation and resource efficiency through protection of buildings from exterior moisture, construction waste diversion, employment of techniques to reduce pollution through recycling of materials, and building commissioning or testing and adjusting.

Y	N/A	RESPON. PARTY	DOC. REF.
		CONTRACTOR	C-4 M-1 E-1

SECTION 5.402 DEFINITIONS

5.402.1 DEFINITIONS. The following terms are defined in Chapter 2 *(and are included here for reference)*

ADJUST. To regulate fluid flow rate and air patterns at the terminal equipment, such as to reduce fan speed or adjust a damper.

BALANCE. To proportion flows within the distribution system, including sub-mains, branches and terminals, according to design quantities.

BUILDING COMMISSIONING. A systematic quality assurance process that spans the entire design and construction process, including verifying and documenting that building systems and components are planned, designed, installed, tested, operated and maintained to meet the owner's project requirements.

ORGANIC WASTE. Food waste, green waste, landscape and pruning wste, nonhazardous wood waste, and food soiled paper waste that is mixed in with food waste.

TEST. A procedure to determine quantitative performance of a system or equipment

SECTION 5.407 WATER RESISTANCE AND MOISTURE MANAGEMENT

5.407.1 WEATHER PROTECTION. Provide a weather-resistant exterior wall and foundation envelope as required by California Building Code Section 1402.2 (Weather Protection), manufacturer's installation instructions or local ordinance, whichever is more stringent.

5.407.2 MOISTURE CONTROL. Employ moisture control measures by the following methods.

5.407.2.1 Sprinklers. Design and maintain landscape irrigation systems to prevent spray on structures.

5.407.2.2 Entries and openings. Design exterior entries and/or openings subject to foot traffic or wind-driven rain to prevent water intrusion into buildings as follows:

5.407.2.2.1 Exterior door protection. Primary exterior entries shall be covered to prevent water intrusion by using nonabsorbent floor and wall finishes within at least 2 feet around and perpendicular to such openings plus at least one of the following:

1. An installed awning at least 4 feet in depth.
2. The door is protected by a roof overhang at least 4 feet in depth.
3. The door is recessed at least 4 feet.
4. Other methods which provide equivalent protection.

5.407.2.2.2 Flashing. Install flashings integrated with a drainage plane.

SECTION 5.408 CONSTRUCTION WASTE REDUCTION, DISPOSAL AND RECYCLING

5.408.1 CONSTRUCTION WASTE MANAGEMENT. Recycle and/or salvage for reuse a minimum of 65% of the non-hazardous construction and demolition waste in accordance with Section 5.408.1.1, 5.408.1.2 or 5.408.1.3; or meet a local construction and demolition waste management ordinance, whichever is more stringent.

5.408.1.1 Construction waste management plan. Where a local jurisdiction does not have a construction and demolition waste management ordinance, submit a construction waste management plan that:

1. Identifies the construction and demolition waste materials to be diverted from disposal by efficient usage, recycling, reuse on the project or salvage for future use or sale.
2. Determines if construction and demolition waste materials will be sorted on-site (source-separated) or bulk mixed (single stream).
3. Identifies diversion facilities where construction and demolition waste material collected will be taken.
4. Specifies that the amount of construction and demolition waste materials diverted shall be calculated by weight or volume, but not by both.

5.408.1.2 Waste Management Company. Utilize a waste management company that can provide verifiable documentation that the percentage of construction and demolition waste material diverted from the landfill complies with this section.

Note: The owner or contractor shall make the determination if the construction and demolition waste material will be diverted by a waste management company.

Exceptions to Sections 5.408.1.1 and 5.408.1.2:

1. Excavated soil and land-clearing debris.
2. Alternate waste reduction methods developed by working with local agencies if diversion or recycle facilities capable of compliance with this item do not exist.
3. Demolition waste meeting local ordinance or calculated in consideration of local recycling facilities and markets.

5.408.1.3 Waste stream reduction alternative. The combined weight of new construction disposal that does not exceed two pounds per square foot of building area may be deemed to meet the 65% minimum requirement as approved by the enforcing agency.

5.408.1.4 Documentation. Documentation shall be provided to the enforcing agency which demonstrates compliance with Sections 5.408.1.1, through 5.408.1.3. The waste management plan shall be updated as necessary and shall be accessible during construction for examination by the enforcing agency.

Notes:

1. Sample forms found in "A Guide to the California Green Building Standards Code (Nonresidential)" located www.dgs.ca.gov/BSC/Resources/Page-Content/Building-Standards-Commission-Resources-List-Folder/CALGreen may be used to assist in documenting compliance with the waste management plan.
2. Mixed construction and demolition debris processors can be located at the California Department of Resources Recycling and Recovery (CalRecycle).

Y	N/A	RESPON. PARTY	DOC. REF.
		CONTRACTOR	C-4 M-1 E-1

5.408.2 UNIVERSAL WASTE. [A] Additions and alterations to a building or tenant space that meet the scoping provisions in Section 301.3 for nonresidential additions and alterations, shall require verification that Universal Waste items such as fluorescent lamps and ballast and mercury containing thermostats as well as other California prohibited Universal Waste materials are disposed of properly and are diverted from landfills. A list of prohibited Universal Waste materials shall be included in the construction documents.

Note: Refer to the Universal Waste Rule link at: http://www.dtsc.ca.gov/universalwaste/

5.408.3 EXCAVATED SOIL AND LAND CLEARING DEBRIS. 100 percent of trees, stumps, rocks and associated vegetation and soils resulting primarily from land clearing shall be reused or recycled. For a phased project, such material may be stockpiled on site until the storage site is developed.

Exception: Reuse, either on or off-site, of vegetation or soil contaminated by disease or pest infestation.

Notes:

1. If contamination by disease or pest infestation is suspected, contact the County Agricultural Commissioner and follow its direction for recycling or disposal of the material.
2. For a map of know pest and/or disease quarantine zones, consult with the California Department of Food and Agriculture. (www.cdfa.ca.gov)

SECTION 5.410 BUILDING MAINTENANCE AND OPERATIONS

5.410.1 RECYCLING BY OCCUPANTS. Provide readily accessible areas that serve the entire building and are identified for the depositing, storage and collection of non-hazardous materials for recycling, including (at a minimum) paper, corrugated cardboard, glass, plastics, organic waste, and metals or meet a lawfully enacted local recycling ordinance, if more restrictive.

Exception: Rural jurisdictions that meet and apply for the exemption in Public Resources Code 42649.82 (a)(2)(A) et seq. shall also be exempt from the organic waste portion of this section.

5.410.1.1 Additions. All additions conducted within a 12-month period under single or multiple permits, resulting in an increase of 30% or more in floor area, shall provide recycling areas on site.

Exception: Additions within a tenant space resulting in less than a 30% increase in the tenant space floor area.

5.410.1.2 Sample ordinance. Space allocation for recycling areas shall comply with Chapter 18, Part 3, Division 30 of the *Public Resources Code*. Chapter 18 is known as the California Solid Waste Reuse and Recycling Access Act of 1991 (Act).

Note: A sample ordinance for use by local agencies may be found in Appendix A of the document at the CalRecycle's web site.

Y	N/A	RESPON. PARTY	DOC. REF.

5.410.2 COMMISSIONING. [N] New buildings 10,000 square feet and over. For new buildings 10,000 square feet and over, building commissioning shall be included in the design and construction processes of the building project to verify that the building systems and components meet the owner's or owner representative's project requirements. Commissioning shall be performed in accordance with this section by trained personnel with experience on projects of comparable size and complexity. For I-occupancies that are not regulated by OSHPD or for I-occupancies and L-occupancies that are not regulated y the California Energy Code Section 100.0 Scope, all requirements in Sections 5.410.2 through 5.410.2.6 shall apply.

Note: For energy-related systems under the scope (Section 100) of the California Energy Code, including heating, ventilation, air conditioning (HVAC) systems and controls, indoor lighting systems and controls, as well as water heating systems and controls, refer to California Energy Code Section 120.8 for commissioning requirements

Commissioning requirements shall include:

1. Owner's or Owner representative's project requirements.
2. Basis of design.
3. Commissioning measures shown in the construction documents.
4. Commissioning plan.
5. Functional performance testing.
6. Documentation and training.
7. Commissioning report.

Exceptions:

1. Unconditioned warehouses of any size.
2. Areas less than 10,000 square feet used for offices or other conditioned accessory spaces within unconditioned warehouses.
3. Tenant improvements less than 10,000 square feet as described in Section 303.1.1.
4. Open parking garages of any size, or open parking garage areas, of any size, within a structure.

Note: For the purposes of this section, unconditioned shall mean a building, area, or room which does not provide heating and or air conditioning.

Informational Notes:

1. IAS AC 476 is an accreditation criteria for organizations providing training and/or certification of commissioning personnel. AC 476 is available to the Authority Having Jurisdiction as a reference for qualifications of commissioning personnel. *AC 476* des not certify individuals to conduct functional performance tests or to adjust and balance systems.
2. Functional performance testing for heating, ventilation, air conditioning systems and lighting controls must be performed in compliance with the *California Energy Code*.

5.410.2.1 Owner's or Owner Representative's Project Requirements (OPR). [N] The expectations and requirements of the building appropriate to its phase shall be documented before the design phase of the project begins. This documentation shall include the following:
1. Environmental and sustainability goals.
2. Building sustainable goals.
3. Indoor environmental quality requirements.
4. Project program, including facility functions and hours of operation, and need for after hours operation.
5. Equipment and systems expectations.
6. Building occupant and operation and maintenance (O&M) personnel expectations.

5.410.2.2 Basis of Design (BOD). [N] A written explanation of how the design of the building systems meets the OPR shall be completed at the design phase of the building project. The Basis of Design document shall cover the following systems:

1. Renewable energy systems.
2. Landscape irrigation systems.
3. Water reuse system.

5.410.2.3 Commissioning plan. [N] Prior to permit issuance a commissioning plan shall be completed to document how the project will be commissioned. The commissioning plan shall include the following:
1. General project information.
2. Commissioning goals.
3. Systems to be commissioned. Plans to test systems and components shall include:
   a. An explanation of the original design intent.
   b. Equipment and systems to be tested, including the extent of tests.
   c. Functions to be tested.
   d. Conditions under which the test shall be performed.
   e. Measurable criteria for acceptable performance.
4. Commissioning team information.
5. Commissioning process activities, schedules and responsibilities. Plans for the completion of commissioning shall be included.

5.410.2.4 Functional performance testing. [N] Functional performance tests shall demonstrate the correct installation and operation of each component, system and system-to-system interface in accordance with the approved plans and specifications. Functional performance testing reports shall contain information addressing each of the building components tested, the testing methods utilized, and include any readings and adjustments made.

5.410.2.5 Documentation and training. [N] A Systems Manual and Systems Operations Training are required, including Occupational Safety and Health Act (OSHA) requirements in *California Code of Regulations* (CCR), Title 8, Section 5142, and other related regulations.

5.410.2.5.1 Systems manual. [N] Documentation of the operational aspects of the building shall be completed within the systems manual and delivered to the building owner or representative. The systems manual shall include the following:
1. Site information, including facility description, history and current requirements.
2. Site contact information.
3. Basic operations and maintenance, including general site operating procedures, basic troubleshooting, recommended maintenance requirements, site events log.
4. Major systems.
5. Site equipment inventory and maintenance notes.
6. A copy of verifications required by the enforcing agency or this code.
7. Other resources and documentation, if applicable.

5.410.2.5.2 Systems operations training. [N] A program for training of the appropriate maintenance staff for each equipment type and/or system shall be developed and documented in the commissioning report and shall include the following:
1. System/equipment overview (what it is, what it does and with what other systems and/or equipment it interfaces).
2. Review and demonstration of servicing/preventive maintenance.
3. Review of the information in the Systems Manual.
4. Review of the record drawings on the system/equipment.

5.410.2.6 Commissioning report. [N] A report of commissioning process activities undertaken through the design and construction phases of the building project shall be completed and provided to the owner or representative.

Y	N/A	RESPON. PARTY	DOC. REF.

5.410.4 TESTING AND ADJUSTING. New buildings less than 10,000 square feet. Testing and adjusting of systems shall be required for new buildings less than 10,000 square feet or new systems to serve an addition or alteration subject to Section 303.1.

5.410.4.2 (Reserved)

Note: For energy-related systems under the scope (Section 100) of the California Energy Code, including heating, ventilation, air conditioning (HVAC) systems and controls, indoor lighting system and controls, as well as water heating systems and controls, refer to California Energy Code Section 120.8 for commissioning requirements and Sections 120.5, 120.6, 130.4, and 140.9(b)3 for additional testing requirements of specific systems.

5.410.4.2 Systems. Develop a written plan of procedures for testing and adjusting systems. Systems to be included for testing and adjusting shall include at a minimum, as applicable to the project:

1. Renewable energy systems.
2. Landscape irrigation systems.
3. Water reuse systems.

5.410.4.3 Procedures. Perform testing and adjusting procedures in accordance with manufacturer's specifications and applicable standards on each system.

5.410.4.3.1 HVAC balancing. In addition to testing and adjusting, before a new space-conditioning system serving a building or space is operated for normal use, the system shall be balanced in accordance with the procedures defined by the Testing Adjusting and Balancing Bureau National Standards; the National Environmental Balancing Bureau Procedural Standards; Associated Air Balance Council National Standards or as approved by the enforcing agency.

Y	N/A	RESPON. PARTY	DOC. REF.

5.410.4.4 Reporting. After completion of testing, adjusting and balancing, provide a final report of testing signed by the individual responsible for performing these services.

5.410.4.5 Operation and maintenance (O & M) manual. Provide the building owner or representative with detailed operating and maintenance instructions and copies of guaranties/warranties for each system. O & M instructions shall be consistent with OSHA requirements in CCR, Title 8, Section 5142, and other related regulations.

5.410.4.5.1 Inspections and reports. Include a copy of all inspection verifications and reports required by the enforcing agency.

DIVISION 5.5 ENVIRONMENTAL QUALITY

SECTION 5.501 GENERAL

5.501.1 SCOPE. The provisions of this chapter shall outline means of reducing the quantity of air contaminants that are odorous, irritating, and/or harmful to the comfort and well-being of a building's installers, occupants and neighbors.

SECTION 5.502 DEFINITIONS

5.502.1 DEFINITIONS. The following terms are defined in Chapter 2 *(and are included here for reference)*

ARTERIAL HIGHWAY. A general term denoting a highway primarily for through traffic usually on a continuous route.

A-WEIGHTED SOUND LEVEL (dBA). The sound pressure level in decibels as measured on a sound level meter using the internationally standardized A-weighting filter or as computed from sound spectral data to which A-weighting adjustments have been made.

1 BTU/HOUR. British thermal units per hour, also referred to as Btu. The amount of heat required to raise one pound of water one degree Fahrenheit per hour, a common measure of heat transfer rate. A ton of refrigeration is 12,000 Btu, the amount of heat required to melt a ton (2,000 pounds) of ice at 32^{0} Fahrenheit.

COMMUNITY NOISE EQUIVALENT LEVEL (CNEL). A metric similar to the day-night average sound level (Ldn), except that a 5 decibel adjustment is added to the equivalent continuous sound exposure level for evening hours (7pm to 10pm) in addition to the 10 dB nighttime adjustment used in the Ldn.

COMPOSITE WOOD PRODUCTS. Composite wood products include hardwood plywood, particleboard and medium density fiberboard. "Composite wood products" does not include hardboard, structural plywood, structural panels, structural composite lumber, oriented strand board, glued laminated timber, timber, prefabricated wood I–joists or finger–jointed lumber, all as specified in California Code of Regulations (CCR), Title 17, Section 93120.1(a).

Note: See CCR, Title 17, Section 93120.1.

DAY-NIGHT AVERAGE SOUND LEVEL (Ldn). The A-weighted equivalent continuous sound exposure level for a 24-hour period with a 10 dB adjustment added to sound levels occurring during nighttime hours (10p.m. to 7 a.m.).

DECIBEL (db). A measure on a logarithmic scale of the magnitude of a particular quantity (such as sound pressure, sound power, sound intensity) with respect to a reference quantity.

ELECTRIC VEHICLE (EV). An automotive-type vehicle for on-road use, such as passenger automobiles, buses, trucks, vans, neighborhood electric vehicles, electric motorcycles, and the like, primarily powered by an electric motor that draws current from a rechargeable storage battery, fuel cell, photovoltaic array, or other source of electric current. Plug-in hybrid electric vehicles (PHEV) are considered electric vehicles. For purposes of the *California Electrical Code*, off-road, self-propoelled electric vehicles, such as industrial trucks, hoists, lifts, transports, golf carts, airline ground support equipment, tractors, boats, and the like, are not included.

ELECTRIC VEHICLE CHARGING STATION(S) (EVCS)). One or more spaces intended for charging electric vehicles.

ELECTRIC VEHICLE SUPPLY EQUIPMENT (EVSE). The conductors, including the ungrounded, grounded, and equipment grounding conductors and the electric vehicle connectors, attachment plugs, and all other fittings, devices, power outlets, or apparatus installed specifically for the purpose of transferring energy between the premises wiring and the electric vehicle.

ENERGY EQUIVALENT (NOISE) LEVEL (Leq). The level of a steady noise which would have the same energy as the fluctuating noise level integrated over the time of period of interest.

EXPRESSWAY. An arterial highway for through traffic which may have partial control of access, but which may or may not be divided or have grade separations at intersections.

FREEWAY. A divided arterial highway with full control of access and with grade separations at intersections.

GLOBAL WARMING POTENTIAL (GWP). The radiative forcing impact of one mass-based unit of a given greenhouse gas relative to an equivalent unit of carbon dioxide over a given period of time. Carbon dioxide is the reference compound with a GWP of one.

GLOBAL WARMING POTENTIAL VALUE (GWP VALUE). A 100-year GWP value published by the Intergovernmental Panel on Climate Change (IPCC) in either its Second Assessment Report (SAR) (IPCC, 1995); or Its Fourth Assessment A-3 Report (AR4) (IPCC, 2007). The SAR GWP values are found in column "SAR (100-yr)" of Table 2.14.; the AR4 GWP values are found in column "100 yr" of Table 2.14.

HIGH-GWP REFRIGERANT. A compound used as a heat transfer fluid or gas that is: (a) a chlorofluorocarbon, a hdrochlorofluorocarbon, a hydrofluorocarbon, a perfluorocarbon, or any compound or blend of compounds, with a GWP value equal to or greater than 150, or (B) any ozone depleting substance as defined in Title 40 of the Code of Federal Regulations, Part 82, sec.82.3 (as amended March 10, 2009).

LONG RADIUS ELBOW. Pipe fitting installed between two lengths of pipe or tubing to allow a change of direction, with a radius 1.5 times the pipe diameter.

LOW-GWP REFRIGERANT. A compound used as a heat transfer fluid or gas that: (A) has a GWP value less than 150, and (B) is not an ozone depleting substance as defined in Title 40 of the Code of Federal Regulations, Part 82, sec.82.3 (as amended March 10, 2009).

MERV. Filter minimum efficiency reporting value, based on ASHRAE 52.2–1999.

MAXIMUM INCREMENTAL REACTIVITY (MIR). The maximum change in weight of ozone formed by adding a compound to the "Base REactive Organic Gas (ROG) Mixture" per weight of compound added, expressed to hundreths of a gram (g O^{3}/g ROC).

PRODUCT-WEIGHTED MIR (PWMIR). The sum of all weighted-MIR for all ingredients in a product subject to this article. The PWMIR is the total product reactivity expressed to hundredths of a gram of ozone formed per gram of product (excluding container and packaging).

PSIG. Pounds per square inch, guage.

REACTIVE ORGANIC COMPOUND (ROC). Any compound that has the potential, once emitted, to contribute to ozone formation in the troposphere.

SCHRADER ACCESS VALVES. Access fittings with a valve core installed.

SHORT RADIUS ELBOW. Pipe fitting installed between two lengths of pipe or tubing to allow a change of direction, with a radius 1.0 times the pipe diameter.

SUPERMARKET. For the purposes of Section 5.508.2, a supermarket is any retail food facility with 8,000 square feet or more conditioned area, and that utilizes either refrigerated display cases, or walk-in coolers or freezers connected to remote compressor units or condensing units.

VOC. A volatile organic compound broadly defined as a chemical compound based on carbon chains or rings with vapor pressures greater than 0.1 millimeters of mercury at room temperature. These compounds typically contain hydrogen and may contain oxygen, nitrogen and other elements. See CCR Title 17, Section 94508(a)

Note: Where specific regulations are cited from different agencies such as SCAQMD, ARB, etc., the VOC definition included in that specific regulation is the one that prevails for the specific measure in question.

SECTION 5.503 FIREPLACES

5.503.1 FIREPLACES. Install only a direct-vent sealed-combustion gas or sealed wood-burning fireplace, or a sealed woodstove or pellet stove, and refer to residential requirements in the California Energy Code, Title 24, Part 6, Subchapter 7, Section 150. Woodstoves, pellet stoves and fireplaces shall comply with applicable local ordinances.

5.503.1.1 Woodstoves. Woodstoves and pellet stoves shall comply with U.S. EPA New Source Performance Standards (NSPS) emission limits as applicable, and shall have a permanent label indicating they are certified to meet the emission limits.

SECTION 5.504 POLLUTANT CONTROL

5.504.1 TEMPORARY VENTILATION. The permanent HVAC system shall only be used during construction if necessary to condition the building or areas of addition or alteration within the required temperature range for material and equipment installation. If the HVAC system is used during construction, use return air filters with a Minimum Efficiency Reporting Value (MERV) of 8, based on ASHRAE 52.2-1999, or an average efficiency of 30% based on ASHRAE 52.1-1992 Replace all filters immediately prior to occupancy, or, if the building is occupied during alteration, at the conclusion of construction.

5.504.3 Covering of duct openings and protection of mechanical equipment during construction. At the time of rough installation and during storage on the construction site until final startup of the heating, cooling and ventilation equipment, all duct and other related air distribution component openings shall be covered with tape, plastic, sheetmetal or other methods acceptable to the enforcing agency to reduce the amount of dust, water and debris which may enter the system.

Y = YES
N/A = NOT APPLICABLE
RESPON. PARTY = RESPONSIBLE PARTY (ie: ARCHITECT, ENGINEER, OWNER, CONTRACTOR, INSPECTOR ETC.)
DOC. REF. = DOCUMENT REFERENCE

DISCLAIMER:*THIS DOCUMENT IS PROVIDED AND INTENDED TO BE USED AS A MEANS TO INDICATE AREAS OF COMPLIANCE WITH THE CALIFORNIA GREEN BUILDING STANDARDS (CALGREEN) CODE. DUE TO THE VARIABLES BETWEEN BUILDING DEPARTMENT JURISDICTIONS, THIS CHECKLIST IS TO BE USED ON AN INDIVIDUAL PROJECT BASIS AND MAY BE MODIFIED BY THE END USER TO MEET THOSE INDIVIDUAL NEEDS. THE END USER ASSUMES ALL RESPONSIBILITY ASSOCIATED WITH THE USE OF THIS DOCUMENT, INCLUDING VERIFICATION WITH THE FULL CODE.*

2022 CALIFORNIA GREEN BUILDING STANDARDS CODE
NONRESIDENTIAL MANDATORY MEASURES, SHEET 2 (January 2023)

FINAL SUBMITTAL
(FOR CONSTRUCTION)

REGISTERED PROFESSIONAL ENGINEER
JEANNE KAY BARNES
No. M28906
Exp. 6/30/24
CIVIL
STATE OF CALIFORNIA
11/22/2023

Kennedy Jenks
9325 SKY PARK COURT, SUITE 300
SAN DIEGO, CA 92123
858-676-7500

SUBMITTED: TIMOTHY WATERS 11/22/2023
PROJECT MANAGER DATE

DATE	INITIAL	REVISION DESCRIPTION	DATE	INITIAL	DATE	INITIAL
ENGINEER OF WORK			OTHER APPROVAL		ACCEPTED	

G-3

SHEET 3 | CITY OF CARLSBAD UTILITIES DEPARTMENT | SHEETS 25

IMPROVEMENT PLAN FOR:
CSGBC
NON-RESIDENTIAL CHECKLIST - II
POINSETTIA LIFT STATION GENERATOR REPLACEMENT

ACCEPTED BY: *DAVE PADILLA*
Dave Padilla 12/19/2023
ENGINEERING MANAGER DATE

DWN BY: EA
CHKD BY: ZDH
RVWD BY: TW

PROJECT NO. 3840-23
DRAWING NO. 540-9

DocuSign Envelope ID: 22E0CD66-5F4E-491C-A1CF-7BC34D603F05

Y	N/A	RESPON. PARTY	DOC. REF.
☒	☐	CONTRACTOR	M-1 E-1

5.504.4 FINISH MATERIAL POLLUTANT CONTROL. Finish materials shall comply with Sections 5.504.4.1 through 5.504.4.6.

5.504.4.1 Adhesives, sealants and caulks. Adhesives, sealants, and caulks used on the project shall meet the requirements of the following standards:
1. Adhesives, adhesive bonding primers, adhesive primers, sealants, sealant primers and caulks shall comply with local or regional air pollution control or air quality management district rules where applicable, or SCAQMD Rule 1168 VOC limits, as shown in Tables 5.504.4.1 and 5.504.4.2. Such products also shall comply with the Rule 1168 prohibition on the use of certain toxic compounds (chloroform, ethylene dichloride, methylene chloride, perchloroethylene and trichloroethylene), except for aerosol products as specified in subsection 2, below.

2. Aerosol adhesives, and smaller unit sizes of adhesives, and sealant or caulking compounds (in units of product, less packaging, which do not weigh more than one pound and do not consist of more than 16 fluid ounces) shall comply with statewide VOC standards and other requirements, including prohibitions on use of certain toxic compounds, of *California Code of Regulations*, Title 17, commencing with Section 94507.

TABLE 5.504.4.1 - ADHESIVE VOC LIMIT[1,2]

Less Water and Less Exempt Compounds in Grams per Liter

ARCHITECTURAL APPLICATIONS	CURRENT VOC LIMIT
INDOOR CARPET ADHESIVES	50
CARPET PAD ADHESIVES	50
OUTDOOR CARPET ADHESIVES	150
WOOD FLOORING ADHESIVES	100
RUBBER FLOOR ADHESIVES	60
SUBFLOOR ADHESIVES	50
CERAMIC TILE ADHESIVES	65
VCT & ASPHALT TILE ADHESIVES	50
DRYWALL & PANEL ADHESIVES	50
COVE BASE ADHESIVES	50
MULTIPURPOSE CONSTRUCTION ADHESIVES	70
STRUCTURAL GLAZING ADHESIVES	100
SINGLE-PLY ROOF MEMBRANE ADHESIVES	250
OTHER ADHESIVES NOT SPECIFICALLY LISTED	50
SPECIALTY APPLICATIONS	
PVC WELDING	510
CPVC WELDING	490
ABS WELDING	325
PLASTIC CEMENT WELDING	250
ADHESIVE PRIMER FOR PLASTIC	550
CONTACT ADHESIVE	80
SPECIAL PURPOSE CONTACT ADHESIVE	250
STRUCTURAL WOOD MEMBER ADHESIVE	140
TOP & TRIM ADHESIVE	250
SUBSTRATE SPECIFIC APPLICATIONS	
METAL TO METAL	30
PLASTIC FOAMS	50
POROUS MATERIAL (EXCEPT WOOD)	50
WOOD	30
FIBERGLASS	80

1. IF AN ADHESIVE IS USED TO BOND DISSIMILAR SUBSTRATES TOGETHER, THE ADHESIVE WITH THE HIGHEST VOC CONTENT SHALL BE ALLOWED.

2. FOR ADDITIONAL INFORMATION REGARDING METHODS TO MEASURE THE VOC CONTENT SPECIFIED IN THIS TABLE, SEE SOUTH COAST AIR QUALITY MANAGEMENT DISTRICT RULE 1168, www.arb.ca.gov/DRDB/SC/CURHTML/R1168.PDF

TABLE 5.504.4.2 - SEALANT VOC LIMIT

Less Water and Less Exempt Compounds in Grams per Liter

SEALANTS	CURRENT VOC LIMIT
ARCHITECTURAL	250
MARINE DECK	760
NONMEMBRANE ROOF	300
ROADWAY	250
SINGLE-PLY ROOF MEMBRANE	450
OTHER	420
SEALANT PRIMERS	
ARCHITECTURAL	
NONPOROUS	250
POROUS	775
MODIFIED BITUMINOUS	500
MARINE DECK	760
OTHER	750

NOTE: FOR ADDITIONAL INFORMATION REGARDING METHODS TO MEASURE THE VOC CONTENT SPECIFIED IN THESE TABLES, SEE SOUTH COAST AIR QUALITY MANAGEMENT DISTRICT RULE 1168.

5.504.4.3 Paints and coatings. Architectural paints and coatings shall comply with VOC limits in Table 1 of the ARB Architectural Coatings Suggested Control Measure, as shown in Table 5.504.4.3, unless more stringent local limits apply. The VOC content limit for coatings that do not meet the definitions for the specialty coatings categories listed in Table 5.504.4.3 shall be determined by classifying the coating as a Flat, Nonflat or Nonflat-High Gloss coating, based on its gloss, as defined in Subsections 4.21, 4.36 and 4.37 of the 2007 California Air Resources Board Suggested Control Measure, and the corresponding Flat, Nonflat or Nonflat-High Gloss VOC limit in Table 5.504.4.3 shall apply.

5.504.4.3.1 Aerosol Paints and coatings. Aerosol paints and coatings shall meet the PWMIR Limits for ROC in Section 94522(a)(3) and other requirements, including prohibitions on use of certain toxic compounds and ozone depleting substances, in Sections 94522(c)(2) and (d)(2) of *California Code of Regulations*, Title 17, commencing with Section 94520; and in areas under the jurisdiction of the Bay Area Air Quality Management District additionally comply with the percent VOC by weight of product limits of Regulation 8 Rule 49.

Y	N/A	RESPON. PARTY	DOC. REF.

TABLE 5.504.4.3 - CONT.

GRAMS OF VOC PER LITER OF COATING, LESS WATER & LESS EXEMPT COMPOUNDS

COATING CATEGORY	CURRENT VOC LIMIT
SPECIALTY COATINGS	
ALUMINUM ROOF COATINGS	400
BASEMENT SPECIALTY COATINGS	400
BITUMINOUS ROOF COATINGS	50
BITUMINOUS ROOF PRIMERS	350
BOND BREAKERS	350
CONCRETE CURING COMPOUNDS	350
CONCRETE/MASONRY SEALERS	100
DRIVEWAY SEALERS	50
DRY FOG COATINGS	150
FAUX FINISHING COATINGS	350
FIRE RESISTIVE COATINGS	350
FLOOR COATINGS	100
FORM-RELEASE COMPOUNDS	250
GRAPHIC ARTS COATINGS (SIGN PAINTS)	500
HIGH-TEMPERATURE COATINGS	420
INDUSTRIAL MAINTENANCE COATINGS	250
LOW SOLIDS COATINGS[1]	120
MAGNESITE CEMENT COATINGS	450
MASTIC TEXTURE COATINGS	100
METALLIC PIGMENTED COATINGS	500
MULTICOLOR COATINGS	250
PRETREATMENT WASH PRIMERS	420
PRIMERS, SEALERS, & UNDERCOATERS	100
REACTIVE PENETRATING SEALERS	350
RECYCLED COATINGS	250
ROOF COATINGS	50
RUST PREVENTATIVE COATINGS	250
SHELLACS:	
CLEAR	730
OPAQUE	550
SPECIALTY PRIMERS, SEALERS & UNDERCOATERS	100
STAINS	250
STONE CONSOLIDANTS	450
SWIMMING POOL COATINGS	340
TRAFFIC MARKING COATINGS	100
TUB & TILE REFINISH COATINGS	420
WATERPROOFING MEMBRANES	250
WOOD COATINGS	275
WOOD PRESERVATIVES	350
ZINC-RICH PRIMERS	340

1. GRAMS OF VOC PER LITER OF COATING, INCLUDING WATER & EXEMPT COMPOUNDS

2. THE SPECIFIED LIMITS REMAIN IN EFFECT UNLESS REVISED LIMITS ARE LISTED IN SUBSEQUENT COLUMNS IN THE TABLE.

3. VALUES IN THIS TABLE ARE DERIVED FROM THOSE SPECIFIED BY THE CALIFORNIA AIR RESOURCES BOARD, ARCHITECTURAL COATINGS SUGGESTED CONTROL MEASURE, FEB. 1, 2008. MORE INFORMATION IS AVAILABLE FROM THE AIR RESOURCES BOARD.

5.504.4.3.2 Verification. Verification of compliance with this section shall be provided at the request of the enforcing agency. Documentation may include, but is not limited to, the following:
1. Manufacturer's product specification
2. Field verification of on-site product containers

5.504.4.4 Carpet Systems.
All carpet installed in the building interior shall meet the requirements of the California Department of Public Health, "Standard Method for the Testing and Evaluation of Volatile Organic Chemical Emissions from Indoor Sources Using Environmental Chambers." Version 1.2, January 2017 (Emission testing method for California Specifications 01350).

See California Department of Public Health's website for certification programs and testing labs.
https://www.cdph.ca.gov/Programs/CCDPHP/DEODC/EHLB/IAQ/Pages/VOC.aspx#material

5.504.4.4.1 Carpet cushion. All carpet cushion installed in the building interior shall meet the requirements of the California Department of Public Health,"Standard Method for the Testing and Evaluation of Volatile Organic Chemical Emissions from Indoor Sources Using Environmental Chambers,"Version 1.2, January 2017 (Emission testing method for California Specifications 01350).

See California Department of Public Health's website for certification programs and testing labs.
https://www.cdph.ca.gov/Programs/CCDPHP/DEODC/EHLB/IAQ/Pages/VOC.aspx#material

5.504.4.4.2 Carpet adhesive. All carpet adhesive shall meet the requirements of Table 5.504.4.1.

5.504.4.5 Composite wood products. Hardwood plywood, particleboard and medium density fiberboard composite wood products used on the interior or exterior of the buildings shall meet the requirements for formaldehyde as specified in ARB's Air Toxics Control Measure (ATCM) for Composite Wood (17 CCR 93120 et seq.). Those materials not exempted under the ATCM must meet the specified emission limits, as shown in Table 5.504.4.5.

5.504.4.5.3 Documentation. Verification of compliance with this section shall be provided as requested by the enforcing agency. Documentation shall include at least one of the following:
1. Product certifications and specifications.
2. Chain of custody certifications.
3. Product labeled and invoiced as meeting the Composite Wood Products regulation (see CCR, Title 17, Section 93120, et seq.).
4. Exterior grade products marked as meeting the PS-1 or PS-2 standards of the Engineered Wood Association, the Australian AS/NZS 2269 or European 636 3S standards.
5. Other methods acceptable to the enforcing agency.

TABLE 5.504.4.5 - FORMALDEHYDE LIMITS[1]

MAXIMUM FORMALDEHYDE EMISSIONS IN PARTS PER MILLION

PRODUCT	CURRENT LIMIT
HARDWOOD PLYWOOD VENEER CORE	0.05
HARDWOOD PLYWOOD COMPOSITE CORE	0.05
PARTICLE BOARD	0.09
MEDIUM DENSITY FIBERBOARD	0.11
THIN MEDIUM DENSITY FIBERBOARD[2]	0.13

1. VALUES IN THIS TABLE ARE DERIVED FROM THOSE SPECIFIED BY THE CALIFORNIA AIR RESOURCES BOARD, AIR TOXICS CONTROL MEASURE *FOR COMPOSITE WOOD* AS TESTED IN ACCORDANCE WITH ASTM E 1333. FOR ADDITIONAL INFORMATION, SEE CALIFORNIA CODE OF REGULATIONS, TITLE 17, SECTIONS 93120 THROUGH 93120.12.

2. THIN MEDIUM DENSITY FIBERBOARD HAS A MAXIMUM THICKNESS OF 5/16 INCHES (8 MM).

Y	N/A	RESPON. PARTY	DOC. REF.

DocuSign Envelope ID: 22E0CD66-5F4E-491C-A1CF-7BC34D603F05

Plot Date: 11/27/2023 3:47 PM

User: ERICK ALMALEL

ABBREVIATIONS

'	FOOT, FEET
"	INCH, INCHES
#	POUND, NUMBER
%	PERCENT
&	AND
@	AT
±	APPROXIMATELY
℄	CENTERLINE
PL	PLATE
<	LESS THAN
=	EQUALS
>	GREATER THAN
Δ	DEFLECTION
∠	ANGLE
°	DEGREE(-S) (ANGULAR)
AASHTO	AMERICAN ASSOCIATION OF STATE HIGHWAY TRANSPORTATION OFFICIALS
AB	AGGREGATE BASE, ANCHOR BOLT(-S)
ABAN(-D)	ABANDON(-ED)
ABS	ACRYLONITRILE-BUTADIENE-STYRENE
AC	ASPHALTIC CONCRETE
ACP	ASBESTOS CEMENT PIPE
ADA	AMERICANS WITH DISABILITIES ACT
ADDIT	ADDITIONAL
ADJ	ADJUST(-ED,-MENT,-ABLE)
ADWF	AVERAGE DRY WEATHER FLOW
AF	ACRE-FEET
AGG	AGGREGATE
ALTD	ALTITUDE
ALUM	ALUMINUM
ANC	ANCHOR
APPROX	APPROXIMATE(-LY)
ARCH	ARCHITECT(-URAL)
ASCE	AMERICAN SOCIETY OF CIVIL ENGINEERS
ASPH	ASPHALT
ASSY	ASSEMBLY
ASTM	AMERICAN SOCIETY FOR TESTING AND MATERIALS
AVE	AVENUE
AVG	AVERAGE
AWT	ADVANCED WATER TREATMENT
AWWA	AMERICAN WATER WORKS ASSOCIATION
B/W	BOTTOM OF WALL
BC	BEGINNING OF HORIZONTAL CURVE
BCR	BEGIN CURB RETURN
BF	BLIND FLANGE
BFP	BACKFLOW PREVENTER
BLDG	BUILDING
BLK	BLOCK(-S)
BM	BENCH MARK
BO	BLOWOFF
BOC	BACK OF CURB
BOT	BOTTOM
BVC	BEGINNING OF VERTICAL CURVE
C	CURVE
C/C	CENTER-TO-CENTER
CALC(S)	CALCULATION(S)
CATV	CABLE TV
CB	CATCH BASIN
CEM	CEMENT
CFS	CUBIC FEET PER SECOND
CHAN	CHANNEL
CI	CAST IRON
CIP	CAST IRON PIPE
CISP	CAST IRON SOIL PIPE
CJ	CONSTRUCTION JOINT
CLR	CLEAR(-ANCE)
CLSM	CONTROLLED LOW STRENGTH MATERIAL
CMC	CEMENT MORTAR COATED
CML	CEMENT MORTAR LINED
CML&C	CEMENT MORTAR LINED AND COATED
CMP	CORRUGATED METAL PIPE
CMU	CONCRETE MASONRY UNIT
CNJ	CONTROL JOINT
CNTR	CENTER
CO	CLEANOUT
COL	COLUMN
CONC	CONCRETE
CONN	CONNECT (-ED, -S, -ION)
CONST	CONSTRUCTION
CONT	CONTINU(-ED, -OUS, -ATION)
CORP	CORPORATION
COTG	CLEANOUT TO GRADE
CP	CONTROL POINT, CATHODIC PROTECTION
CPLG	COUPLING
CPVC	CHLORINTATED POLYVINYL CHLORIDE
CR	CRUSHED ROCK
CTRL	CONTROL
CTS	CATHODIC TEST STATION
CU FT	CUBIC FOOT, CUBIC FEET
CU YD	CUBIC YARD(-S)
DCA	DOUBLE CHECK ASSEMBLY (TWIN ELEMENT CHECK VALVE)
DEFL	DEFLECTION
DEG	DEGREE(-S)
DEMO	DEMOLISH
DEPT	DEPARTMENT
DI	DUCTILE IRON, DROP INLET
DIA	DIAMETER
DIAG	DIAGONAL
DIAPH	DIAPHRAGM
DIM(-S)	DIMENSION(-S)
DIP	DUCTILE IRON PIPE
DISCH	DISCHARGE
DISTR	DISTRIBUTION
DL	DEAD LOAD
DN	DOWN
DO	DISSOLVED OXYGEN
DR	DRAIN
DS	DOWN SPOUT
DTL(-S)	DETAIL(-S)
DWG(-S)	DRAWING(-S)
E	EAST
EA	EACH
EC	END OF HORIZONTAL CURVE
ECC	ECCENTRIC
ECD	EPOXY COATED
ECR	END CURB RETURN
EF	EACH FACE
EFFIC	EFFICIENCY
EFFL	EFFLUENT
EG	EXISTING GRADE
EGL	ENERGY GRADE LINE
EL	ELEVATION, EPOXY LINED
EL&C	EPOXY LINED AND COATED
ELEC	ELECTRIC(-AL)
ELL	ELBOW
EMERG	EMERGENCY
ENCL	ENCLOSURE
ENGR	ENGINEER
EP	EDGE OF PAVEMENT
EPA	ENVIRONMENTAL PROTECTION AGENCY
EQ	EQUAL (-LY, -IZATION)
EQPM	EQUIPMENT
EST	ESTIMATE(-D)
ETC	ET CETERA
ETS	ELECTROLYSIS TEST STATION
EVC	END OF VERTICAL CURVE
EW	EACH WAY
EXC	EXCAVATE
EXH	EXHAUST
EXIST	EXISTING
EXP	EXPANSION
EXT	EXTERNAL
FAC	FACTORY
FACIL	FACILIT(-Y, -IES)
FC	FLEXIBLE COUPLING
FCA	FLANGE COUPLING ADAPTER
FCO	FLOOR CLEANOUT
FD	FLOOR DRAIN
FDR	FEEDER
FF	FINISHED FLOOR
FFE	FINISHED FLOOR ELEVATION
FG	FINISHED GRADE
FH	FIRE HYDRANT
FIG	FIGURE
FIN	FINISH(-ED)
FL	FLOW LINE
FLEX	FLEXIBLE
FLG	FLANGE(-D)
FLOC	FLOCCULATION
FLR	FLOOR
FM	FLOW METER
FO	FIBER OPTIC
FPS	FEET PER SECOND
FRP	FIBERGLASS REINFORCED PLASTIC
FS	FINISHED SURFACE
FT	FOOT, FEET
FTG	FOOTING
FUT	FUTURE
GA	GAUGE
GAC	GRANULAR ACTIVATED CARBON
GAL	GALLON(-S)
GALV	GALVANIZED
GAS	GASOLINE
GB	GRADE BREAK
GI	GALVANIZED IRON
GND	GROUND
GPD	GALLONS PER DAY
GPH	GALLONS PER HOUR
GPM	GALLONS PER MINUTE
GPR	GROUND-PENETRATING RADAR
GR	GRATE
GRL	GUARDRAIL
GS	GALVANIZED STEEL
H	HIGH, HEIGHT
H2O2	HYDROGEN PEROXIDE
H2S	HYDROGEN SULFIDE
H2SO4	SULFURIC ACID
HB	HOSE BIB
HDPE	HIGH DENSITY POLYETHYLENE
HGL	HYDRAULIC GRADE LINE
HH	HANDHOLE
HM	HOLLOW METAL
HORZ	HORIZONTAL
HP	HORSEPOWER
H-P	HINGE POINT
HPT	HIGH POINT
HR(S)	HOUR(-S)
HT	HEIGHT
HVAC	HEATING, VENTILATING, AND AIR CONDITIONING
HWL	HIGH WATER LEVEL
HWY	HIGHWAY
HYD	HYDRAULIC
I&C	INSTRUMENTATION AND CONTROL
ID	INSIDE DIAMETER
IE	INVERT ELEVATION
IN	INCH(-ES)
INFL	INFLUENT
INSTR	INSTRUMENT(-ATION)
INV	INVERT
IPS	IRON PIPE SIZE
IRRG	IRRIGATION
ISO	ISOLAT(-E, -ION)
IX	ION EXCHANGE
JB	JUNCTION BOX
JT	JOINT
L	LENGTH, LINE
LAT	LATERAL
LB(-S)	POUND(-S)
LB(-S)/SF	POUND(-S) PER SQUARE FOOT
LF	LINEAR FEET
LG	LONG
LIP	LIP OF GUTTER
LL	LIVE LOAD
LOC	LOCATION
LP	LOW POINT
LPG	LIQUIFIED PETROLEUM GAS (PROPANE OR BUTANE AS NOTED)
LR	LONG RADIUS
LT	LEFT TURN
LTG	LIGHTING
LWL	LOW WATER LEVEL
MAX	MAXIMUM
MCC	MOTOR CONTROL CENTER
MECH	MECHANICAL
MF	MICROFILTRATION
MFR	MANUFACTURER
MG	MILLION GALLON(-S)
MGD	MILLION GALLONS PER DAY
MH	MANHOLE
MIL(-S)	ONE-THOUSANDTH OF AN INCH
MIN	MINIMUM
MISC	MISCELLANEOUS
MJ	MECHANICAL JOINT
MOD(-S)	MODIF(-Y, -ICATIONS)
MON	MONUMENT
MPH	MILES PER HOUR
MSE	MECHANICALLY STABILIZED EARTH
MT(-D, -G)	MOUNT(-ED, -ING)
MTL	METAL
N	NORTH
N/A	NOT APPLICABLE
NAD	NORTH AMERICAN DATUM
NAOCL	SODIUM HYPOCHLORITE
NAOH	SODIUM HYDROXIDE
NAVD	NORTH AMERICAN VERTICAL DATUM
NE	NORTHEAST
NF	NANOFILTRATION
NFC	NOT FOR CONSTRUCTION
NG	NATURAL GAS
NH3	AMMONIA
NIC	NOT IN CONTRACT
NO	NUMBER
NOM	NOMINAL
NORM	NORMAL
NPT	NATIONAL PIPE THREAD
NTS	NOT TO SCALE
NW	NORTHWEST
NWL	NORMAL WATER LEVEL
O3	OZONE
OC	ON CENTER
OD	OUTSIDE DIAMETER
OF	OVERFLOW
OG	ORIGINAL GROUND
OPNG(-S)	OPENING(-S)
ORIG	ORIGINAL
P	PNEUMATIC, PIPE
P/L	PROPERTY LINE
PACP	PERFORATED ASBESTOS CEMENT PIPE
PC(-S)	PIECE(-S), PHOTOCELL, POINT OF CURVE (BEGIN CURVE)
PCC	POINT OF COMPOUND CURVE
PCCP	PRETENSIONED CONCRETE CYLINDER PIPE
PCO	PRESSURE CLEANOUT
PCOTG	PRESSURIZED CLEANOUT TO GRADE
PE	POLYETHYLENE
PERC	PERCOLAT(-E, -ION)
PERF	PERFORAT(-E, -ED, -ES, -ATION)
PF	PROFILE
PI	POINT OF INTERSECTION
PM	PROJECT MANAGER
POT	POTABLE
PP	POWER POLE
PR	PAIR
PRESS	PRESSURE
PROP	PROPERTY
PROT	PROTECT(-OR)
PRV	PRESSURE RELIEF VALVE, PRESSURE REDUCING VALVE
PSF	POUNDS PER SQUARE FOOT
PSI	POUNDS PER SQUARE INCH
PSL	PIPE SLEEVE
PSTA	PUMP STATION
PSV	PRESSURE SUSTAINING VALVE
PT(-S)	POINT OF TANGENT (END CURVE), PRESSURE-TREATED, POINT(-S)
PVC	POLYVINYL CHLORIDE, POINT OF VERTICAL CURVE
PVI	POINT OF VERTICAL INTERSECTION
PVMT	PAVEMENT
PVT	POINT OF VERTICAL TANGENCY
PW	POTABLE WATER
PWR	POWER
PWWF	PEAK WET WEATHER FLOW
R, RAD	RADIUS
R/W	RIGHT OF WAY
RCCP	REINFORCED CONCRETE CYLINDER PIPE
RCP	REINFORCED CONCRETE PIPE
RD	ROAD
RED	REDUCE(-R)
REG	REGULAT(-E, -OR, -ION, -ING)
REINF	REINFORC(-E, -ED, -ING, -EMENT)
REQD	REQUIRED
REQT	REQUIREMENT
RESIL	RESILIENT
RESV	RESERVOIR
RM	ROOM
RND	ROUND
RO	REVERSE OSMOSIS
RPP	REDUCED PRESSURE PRINCIPLE
RR	RAILROAD
RT	RIGHT TURN
RTE	ROUTE
RTN	RETURN
S	SEWER, SOUTH
S/W	SIDEWALK
SCADA	SUPERVISORY CONTROL AND DATA ACQUISITION
SCH	SCHEDULE
SD	STORM DRAIN
SDMH	STORM DRAIN MANHOLE
SE	SOUTHEAST
SECT	SECTION
SGNL	SIGNAL
SHT	SHEET
SI	SIDE INLET
SIM	SIMILAR
SPC(-S, -D)	SPACE(-S, -D)
SPEC(-S)	SPECIFICATION(-S)
SQ	SQUARE
SQ FT	SQUARE FEET
SQ MI	SQUARE MILES
SS	STAINLESS STEEL, SANITARY SEWER
ST	STREET
STA	STATION
STD(-S)	STANDARD(-S)
STL	STEEL
STM	STEAM
STRC	STRUCTUR(-E, -AL)
SUPP	SUPPORT(-S)
SURF	SURFACE
SW	SOUTHWEST
SYM	SYMMETRICAL
SYS	SYSTEM
T&B	TOP AND BOTTOM
T/C	TOP OF CONCRETE
T/P	TOP OF PAVEMENT
T/S	TOP OF STEEL
T/W	TOP OF WALL
T-_-P	TYPE _____ PIPE
T-_-S	TYPE _____ SUPPORT
TAN	TANGENT(-IAL)
TBM	TEMPORARY BENCHMARK, TUNNEL BORING MACHINE
TDH	TOTAL DYNAMIC HEAD
TEL	TELEPHONE
TEMP	TEMPERATURE, TEMPORARY
THK	THICK(-ENED, -ENER, -NESS)
THRU	THROUGH
TNK	TANK
TOPO	TOPOGRAPHY
TOT	TOTAL, TOTALIZE(R)
TP	TEST PIT
TRTMT	TREATMENT
TYP	TYPICAL
UD	UNDERDRAIN
UF	ULTRAFILTRATION
UG	UNDERGROUND
UNKN	UNKNOWN
UV	ULTRAVIOLET
VAR	VARIES, VARIABLE
VC	VERTICAL CURVE
VCP	VITRIFIED CLAY PIPE
VERT	VERTICAL
VFD	VARIABLE FREQUENCY DRIVE (AC)
VIF	VERIFY IN FIELD
VOL	VOLUME
VPI	VERTICAL POINT OF INTERSECTION
VT	VENT
VTP	VERTICAL TURBINE PUMP
VTR	VENT TO ROOF
W	WIDE, WIDTH, WELDED, WEST
W/	WITH
W/O	WITHOUT
WB	WATER BAR
WCO	WALL CLEANOUT
WD	WOOD
WMH	WATER MANHOLE
WP	WATERPROOF
WS	WATER SURFACE
WSP	WELDED STEEL PIPE
WSTP	WATERSTOP
WT	WEIGHT
WTP	WATER TREATMENT PLANT
WTR	WATER
WV	WATER VALVE
WW	WASTEWATER
WWF	WELDED WIRE FABRIC
WWM	WELDED WIRE MESH
WWTP	WASTEWATER TREATMENT PLANT
XFMR	TRANSFORMER
YD	YARD
YR	YEAR

CIVIL NOTES

GENERAL

1. OBTAIN PERMITS NECESSARY TO COMPLETE FEATURES WITHIN EASEMENTS, DEDICATIONS AND PUBLIC RIGHT-OF-WAY.
2. NOT USED
3. ORIENT SURFACE FEATURES PARALLEL TO CURB/GUTTER OR WALLS UNLESS OTHERWISE NOTED.
4. PROTECT ALL SURVEY MONUMENTS.
5. SHOULD THE CONTRACTOR DISCOVER ANY DISCREPANCIES BETWEEN THE CONDITIONS EXISTING IN THE FIELD AND THE INFORMATION SHOWN ON THESE DRAWINGS, CONTRACTOR SHALL NOTIFY THE OWNER PRIOR TO PROCEEDING WITH CONSTRUCTION.
6. THE CONTRACTOR SHALL MAINTAIN A COPY OF AN APPROVED SET OF PLANS ON THE CONSTRUCTION SITE AT ALL TIMES.
7. NOT USED.
8. NOT USED.
9. "LIMITS OF WORK" INDICATES THE TOTAL AREA OF DISTURBANCE DUE TO THE NATURE AND SCOPE OF THE WORK. THE TERM MAY ALSO BE USED TO INDICATE AREAS WHERE ACCESS IS LIMITED OR RESTRICTED.
10. PROVIDE TEMPORARY TRAFFIC SIGNAGE IN ACCORDANCE WITH STATE AND LOCAL AGENCIES DURING THE COURSE OF CONSTRUCTION.
11. THE CONTRACTOR SHALL BE RESPONSIBLE FOR ALL TRAFFIC CONTROL WITHIN THE PUBLIC RIGHT OF WAY IN ACCORDANCE WITH LOCAL ORDINANCES. NO WORK SHALL COMMENCE UNTIL ALL REQUIRED TRAFFIC CONTROL MEASURES ARE IN PLACE.

GRADING

1. ADJUST VALVE BOXES, PULL BOXES, VAULTS, AND MAHOLES TO FINISHED GRADES AND SLOPES SHOWN ON CIVIL GRADING DRAWINGS UNLESS OTHERWISE SHOWN OR SPECIFIED. MANHOLES IN OPEN FIELDS SHALL BE SET ONE FOOT ABOVE GRADE. APPROXIMATE RIM ELEVATIONS ARE SHOWN ON DRAWINGS.
2. GRADES SHOWN ARE TO TOP OF THE FINISHED SURFACE UNLESS OTHERWISE NOTED.

DEMOLITION

1. DEMOLITION EXTENTS INDICATED IN DRAWINGS ARE THE MINIMUM REQUIRED TO COMPLETE THE WORK. EXTENTS OF DEMOLITION REFLECTED IN THE CONTRACTOR'S BID SHALL INCORPORATE DEMOLITION MEANS AND METHODS.
2. PROVIDE COORDINATES OF ABANDONED UTILITIES IN THE RECORD DRAWINGS.

PIPING

1. THESE NOTES ARE GENERIC IN NATURE. PROJECT SPECIFIC NOTES ON FOLLOWING DRAWINGS TAKE PRECEDENCE.
2. THE CONTRACTOR SHALL COMPLY WITH THE STATE DEPARTMENT OF HEALTH SERVICES CRITERIA FOR THE SEPARATION BETWEEN WATER MAINS, NON-POTABLE WATER UTILITIES, AND SEWER.
3. INSTALL WATER, STORM, AND SEWER PIPELINES WITH A MINIMUM OF 36 INCHES OF COVER, UNLESS OTHERWISE NOTED.
4. PRIOR TO SUBMITTAL OF PIPE SHOP DRAWINGS, VERIFY THE INVERT ELEVATIONS, ALIGNMENT, OUTSIDE DIAMETER, LOCATION, AND MATERIAL OF ALL EXISTING PIPELINES TO WHICH NEW PIPELINES WILL BE CONNECTED.
5. PIPE STATIONING REPRESENTS THE HORIZONTAL PROJECTION OF THE PIPE CENTERLINE BETWEEN MANHOLES, POINTS OF INFLECTION, AND/OR CENTER OF FITTINGS.
6. RESTRAIN ALL PIPE, FITTINGS, FLEXIBLE CONNECTORS, AND/OR FLANGED COUPLING ADAPTERS UNLESS OTHERWISE NOTED. THRUST PROTECTION SHALL BE ADEQUATE FOR TEST PRESSURES SPECIFIED.
7. LOCATION OF EXISTING UTILITIES ARE APPROXIMATE. CONTRACTOR SHALL EXPOSE EXISTING PIPE(S) OR STRUCTURE(S) TO WHICH NEW PIPE(S) IS/ARE CONNECTING. VERIFY EXACT LOCATION, SIZE, MATERIALS, AND INVERT ELEVATIONS PRIOR TO SUBMITTING PIPE DRAWINGS.
8. PROTECT EXISTING UTILITIES UNLESS OTHERWISE NOTED.
9. USE CAUTION WHEN WORKING IN PROXIMITY TO GAS. NOTIFY UTILITY COMPANY WHEN WORKING WITHIN THE VICINITY, AND FOLLOW UTILITY SAFETY GUIDELINES AND OSHA REQUIREMENTS. HAND DIG ALL CONSTRUCTION WITHIN 5 FEET HORIZONTALLY OF ANY GAS MAIN.
10. USE CAUTION WHEN WORKING IN PROXIMITY TO OVERHEAD ELECTRICAL LINES. FOLLOW ELECTRICAL UTILITY SAFETY GUIDELINES AND OSHA REQUIREMENTS.
11. CROSSING PIPELINES SHOWN IN PROFILE REPRESENT OUTSIDE DIAMETER UNLESS OTHERWISE NOTED.
12. ORIENT ECCENTRIC MANHOLE(S) SUCH THAT THE LID IS OUTSIDE OF WHEEL PATH.
13. COORDINATES LOCATING MANHOLES ARE TO THE CENTER OF THE STRUCTURE.
14. SIZE OF FITTING SHOWN ON THE DRAWINGS CORRESPONDS TO THE ADJACENT STRAIGHT RUN OF PIPE, UNLESS OTHERWISE NOTED. MATCH TYPE OF JOINT AND FITTING MATERIAL TO ADJACENT STRAIGHT RUN OF PIPE, UNLESS OTHERWISE NOTED.
15. PIPE HANGER AND SUPPORT LOCATIONS SHOWN ARE APPROXIMATE. FINAL PIPE SUPPORT LOCATIONS SHALL BE SUBMITTED BY THE CONTRACTOR AND APPROVED BY THE ENGINEER PRIOR TO INSTALLATION.
16. NUMBER AND LOCATION OF UNIONS SHOWN ON DRAWINGS ARE APPROXIMATE. PROVIDE UNIONS NECESSARY TO FACILITATE CONVENIENT REMOVAL OF VALVES AND MECHANICAL EQUIPMENT.
17. COORDINATE AND PERFORM CONNECTIONS TO THE WORK OF OTHER CONTRACTORS, IF APPLICABLE.

RECORD DRAWING REFERENCE NOTES

SITE FEATURES AND UTILITIES SHOWN ON SHEET C-1, C-4, AND C-5 WERE TRACED FROM RECORD DRAWINGS (ASBUILT FOR "CONSTRUCTION PLANS FOR POINSETTIA SEWAGE LIFT STATION UPGRADE" DATED MAY 2007, AND APPROVED ON 6-14-07) AND SUPPLEMENTED WITH INFORMATION FROM RECORD DRAWINGS (ASBUILT FOR "PLANS FOR THE CONSTRUCTION OF THE POINSETTIA SEWAGE LIFT STATION IN THE CARLSBAD MUNICIPAL WATER DISTRICT" AS-BUILT DATED 6/18/99).
SURFACE FEATURES AND UTILITIES PROVIDED AS REFERENCE FOR CONSTRUCTION ALL LOCATIONS TO BE FIELD VERIFIED.

SPOT ELEVATIONS SHOWN ON C-5 WERE TRACED FROM RECORD DRAWINGS (ASBUILT FOR "PLANS FOR THE CONSTRUCTION OF THE POINSETTIA SEWAGE LIFT STATION IN THE CARLSBAD MUNICIPAL WATER DISTRICT" AS-BUILT DATED 6/18/99).

CONTOUR SHOWN ON SHEET C-5 WERE TRACED FROM RECORD DRAWINGS (ASBUILT FOR "CONSTRUCTION PLANS FOR POINSETTIA SEWAGE LIFT STATION UPGRADE DATED MAY 2007, AND APPROVED ON 6-14-07) CONTAINING THE FOLLOWING SOURCE OF TOPOGRAPHY. CONTOURS PROVIDED AS REFERENCE FOR CONSTRUCTION ALL ELEVATIONS TO BE FIELD VERIFIED.

SOURCE OF TOPOGRAPHY

TOPOGRAPHY BASED ON FIELD TOPOGRAPHIC SURVEY PERFORMED BY KRIEGER & STEWART ON 02-13-07.

PROJECT LOCATION

THE PROJECT IS LOCATED ON THE NORTH SIDE OF POINSETTIA LANE APPROXIMATELY 600' EAST OF THE INTERSECTION OF POINSETTIA LANE AND ALICANTE ROAD.

BENCH MARK (CLSB-070)•

DESCRIPTION: T.B.M.
LOCATION: AT THE F.F. AT THE CENTERLINE OF THE SOUTHERLY DOOR OF THE CHEMICAL/ PUMP BUILDING PER C.M.W.D. "AS-BUILT" PAVING AND DRAINAGE PLAN FOR THE POINSETTIA SEWAGE LIFT STATION. (CMWD 95-402 SHEET 3 OF 48)
RECORDED: 04/27/1999
ELEVATION: 108.41' *DATUM:* MSL

C-1

FINAL SUBMITTAL
(FOR CONSTRUCTION)

REGISTERED PROFESSIONAL ENGINEER JOSE A. CUEVAS No. C63541 Exp. 9/30/24 CIVIL STATE OF CALIFORNIA
11/22/2023

Kennedy Jenks
9325 SKY PARK COURT, SUITE 300
SAN DIEGO, CA 92123
858-676-7500

SUBMITTED: TIMOTHY WATERS 11/22/2023
PROJECT MANAGER DATE

DATE	INITIAL	REVISION DESCRIPTION	DATE	INITIAL	DATE	INITIAL
ENGINEER OF WORK			OTHER APPROVAL		ACCEPTED	

SHEET 5 | CITY OF CARLSBAD UTILITIES DEPARTMENT | SHEETS 25

IMPROVEMENT PLAN FOR:
CIVIL ABBREVIATIONS AND NOTES
POINSETTIA LIFT STATION GENERATOR REPLACEMENT

ACCEPTED BY: DAVE PADILLA
Dave Padilla 12/19/2023
ENGINEERING MANAGER DATE

DWN BY: EA
CHKD BY: JC
RVWD BY: PT

PROJECT NO. 3840-23

DRAWING NO. 540-9

DocuSign Envelope ID: 22E0CD66-5F4E-491C-A1CF-7BC34D603F05

Plot Date: 11/27/2023 3:47 PM
User: ERICK ALMALEL

GEOTECHNICAL SYMBOLS

- # — SOIL BORING LOCATION
- TP-# — TEST PIT LOCATION
- MW — MONITORING WELL

CORROSION CONTROL SYMBOLS

- ETS — ELECTROLYSIS TEST STATION
- T — CATHODIC TEST STATION

CTS	CORROSION TEST STATION
CATS	CASING TEST STATION
IJTS	INSULATING JOINT TEST STATION
FPTS	FOREIGN PIPELINE TEST STATION
CSTS	CURRENT SPAN TEST STATION

EROSION CONTROL SYMBOLS

- RIPRAP
- HAY BALE/STRAW WATTLE
- SILT FENCE

GENERAL CIVIL SYMBOLS

- S=0.012 — SLOPE ON PAVED SURFACE OR PIPE
- 3:1 — BERM SLOPE (HORZ TO VERT)
- SURFACE FLOW DIRECTION

TOPOGRAPHY AND MAPPING SYMBOLS

- 125 — MAJOR CONTOURS
- 124 — MINOR CONTOURS
- TOP OF SLOPE
- TOE OF SLOPE
- P/L — PROPERTY LINE
- R/W — RIGHT-OF-WAY LINE
- GRADE BREAK
- R — RIDGE LINE
- ESMT — EASEMENT LINE
- ESMT TEMPORARY — TEMPORARY EASEMENT LINE
- TRAIL OR DIRT ROAD
- FLOW LINE
- FLOOD HAZARD AREA
- EDGE OF WETLANDS
- RAILROAD
- SITE OR RETAINING WALL
- GUARDRAIL (PERMANENT)
- LIMITS OF GRADING
- LIMITS OF EXCAVATION

EXISTING UTILITIES

G	NATURAL GAS
HPG	HIGH PRESSURE GAS
LPG	LIQUID PETROLEUM
W	WATER LINE
PW	POTABLE WATER
FIRE	FIRE SUPPLY WATER
REW	RECLAIMED WATER
UW	UTILITY/NON-POTABLE WATER
IRR	IRRIGATION WATER
SDR	STORM DRAIN
SS	SANITARY SEWER
STM	STEAM
TEL	TELEPHONE
COMM	COMMUNICATIONS LINE
FOC	FIBER OPTIC CABLE
CATV	CABLE TV
E	POWER
UNK	UNIDENTIFIED
ABND	ABANDONED UTILITY

EXISTING FEATURES

- VEGETATION
- TREE (SIZE AND TYPE)
- WELL
- POWER POLE
- GUY LINE AND ANCHOR
- MB — MAILBOX
- TRAFFIC SIGNAL BOX OR POLE
- SIGN
- T — TELEPHONE BOX
- C — COMMUNICATION/CATV BOX
- HOSE BIBB
- HR — HOSE RACK
- W — WATER BOX/METER
- BFP — BACKFLOW PREVENTER
- MH / LID — MANHOLE OR VAULT
- FH — FIRE HYDRANT

PROPOSED FEATURES

- DROP INLET CATCH BASIN
- FLARED END SECTION

PIPING AND UTILITIES

- AV/AR VALVE (IN PLAN) LOCATE ON SIDE SHOWN
- AV/AR VALVE (IN PROFILE)
- BLOWOFF (IN PLAN) LOCATE ON SIDE SHOWN
- BLOWOFF (IN PROFILE)
- FH — FIRE HYDRANT (IN PLAN)
- MH / LID — MANHOLE (IN PLAN)
- CO — CLEANOUT TO GRADE (IN PLAN)

ROADWORK AND PAVING

NOTES:
1. PAVING PATTERNS MAY ONLY APPEAR IN PORTIONS OF PAVED AREAS TO DEFINE LIMITS OF PAVING.
2. SEE ALSO GENERAL LEGEND FOR ADDITIONAL PAVING PATTERNS.

- ASPHALT (IN PLAN AND SECTION)
- CONCRETE CURB
- CONCRETE CURB AND GUTTER
- DRIVEWAY/ACCESS RAMP
- WELDED WIRE FABRIC (IN SECTION)

CONTROL SYMBOLS

- BM-XX — BENCH MARK
- # — SITE COORDINATES (SEE TABLE ON DRAWINGS)
- DESCRIPTION N XXXXXX.XX E XXXXXX.XX — SITE COORDINATES
- CONTROL POINT
- MONUMENT
- FG XXX.XX — FINISHED ELEVATION/GRADE
- EG XXX.X — EXISTING ELEVATION/GRADE
- X — CURVE DATA (SEE TABLE ON DRAWINGS)

STRUCTURES

- x x x — FENCE (CHAIN LINK)
- FENCE (WOOD)
- FENCE (SWING GATE)
- PROTECTIVE BARRIER
- PROTECTIVE BARRIER (REMOVABLE)
- STRUCTURE
- STRUCTURE (BELOW GRADE)

C-2

REGISTERED PROFESSIONAL ENGINEER — JOSE A. CUEVA — No. C63541 Exp. 9/30/24 — CIVIL — STATE OF CALIFORNIA
11/22/2023

Kennedy Jenks
9325 SKY PARK COURT, SUITE 300
SAN DIEGO, CA 92123
858-676-7500

SUBMITTED: TIMOTHY WATERS — PROJECT MANAGER — 11/22/2023 DATE

DATE	INITIAL	REVISION DESCRIPTION	DATE	INITIAL	DATE	INITIAL
ENGINEER OF WORK			OTHER APPROVAL		ACCEPTED	

SHEET 6 — CITY OF CARLSBAD, UTILITIES DEPARTMENT — SHEETS 25

IMPROVEMENT PLAN FOR:
CIVIL LEGEND
POINSETTIA LIFT STATION GENERATOR REPLACEMENT

ACCEPTED BY: DAVE PADILLA
Dave Padilla — ENGINEERING MANAGER — 12/19/2023 DATE

DWN BY: EA
CHKD BY: JC
RVWD BY: PT

PROJECT NO. 3840-23
DRAWING NO. 540-9

FINAL SUBMITTAL
(FOR CONSTRUCTION)

DocuSign Envelope ID: 22E0CD66-5F4E-491C-A1CF-7BC34D603F05

Plot Date: 11/27/2023 3:48 PM
User: ERICK ALMALEL

GENERAL SHEET NOTES

1. POTENTIAL CONTRACTOR STAGING AREAS. TO BE COORDINATED WITH CITY PRIOR TO USE. PROTECT ALL EXIST. ITEMS ADJACENT TO CONTRACTOR STAGING AREAS.

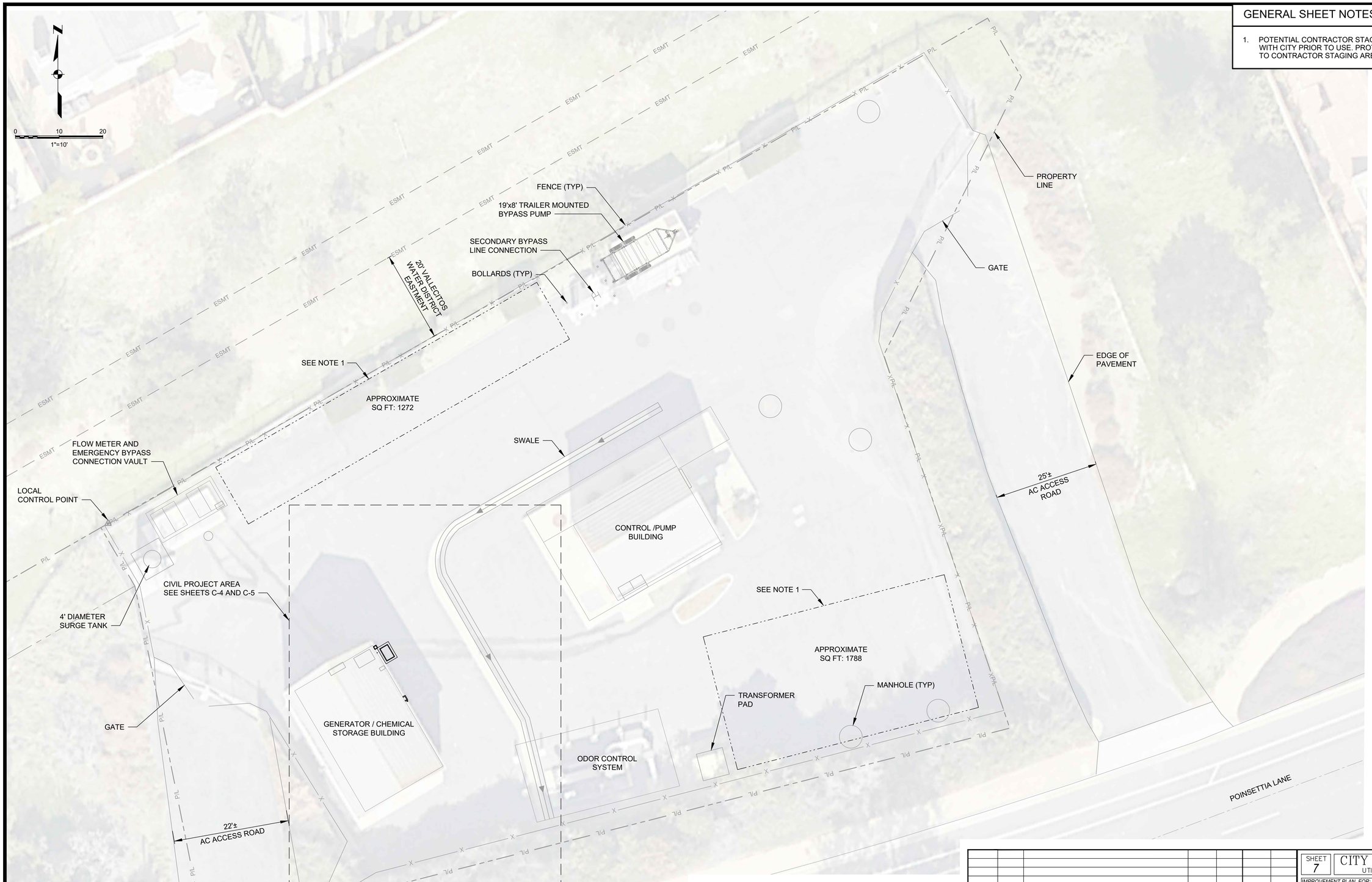

FINAL SUBMITTAL
(FOR CONSTRUCTION)

SITE PLAN

REGISTERED PROFESSIONAL ENGINEER JORGE A. CUEVA No. C63541 Exp. 9/30/24 CIVIL STATE OF CALIFORNIA
11/22/2023

Kennedy Jenks
9325 SKY PARK COURT, SUITE 300
SAN DIEGO, CA 92123
858-676-7500

SUBMITTED: TIMOTHY WATERS 11/22/2023
PROJECT MANAGER DATE

DATE	INITIAL	REVISION DESCRIPTION	DATE	INITIAL	DATE	INITIAL
ENGINEER OF WORK			OTHER APPROVAL		ACCEPTED	

C-3

SHEET 7 | CITY OF CARLSBAD UTILITIES DEPARTMENT | SHEETS 25

IMPROVEMENT PLAN FOR:
OVERALL SITE PLAN AND KEY MAP
POINSETTIA LIFT STATION GENERATOR REPLACEMENT

ACCEPTED BY: DAVE PADILLA
Dave Padilla 12/19/2023
ENGINEERING MANAGER DATE

DWN BY: EA
CHKD BY: JC
RVWD BY: PT

PROJECT NO. 3840-23

DRAWING NO. 540-9

DocuSign Envelope ID: 22E0CD66-5F4E-491C-A1CF-7BC34D603F05

Plot Date: 11/27/2023 3:48 PM
User: ERICK ALMALEL

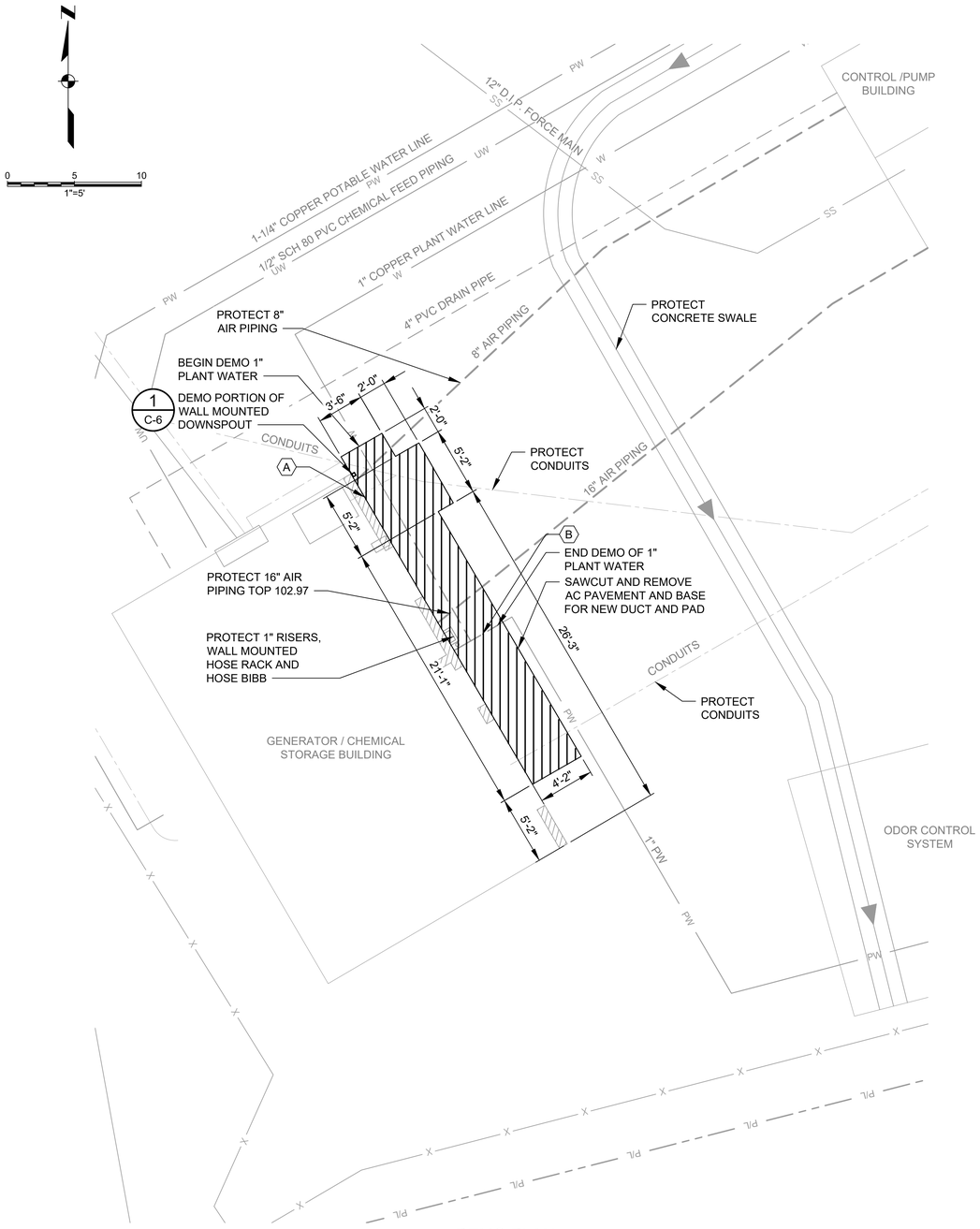

DEMO PLAN

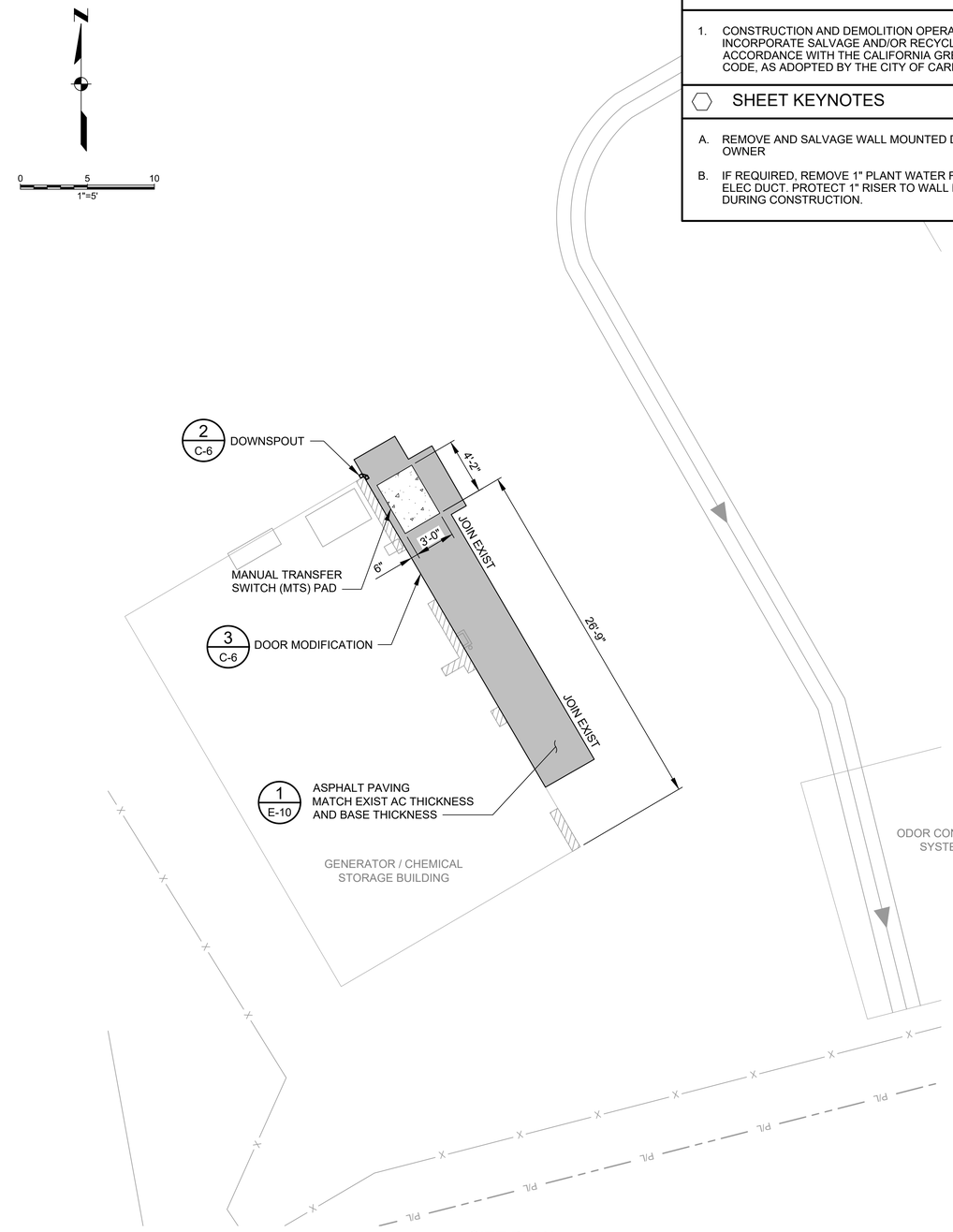

SITE PLAN

GENERAL SHEET NOTES

1. CONSTRUCTION AND DEMOLITION OPERATIONS SHALL INCORPORATE SALVAGE AND/OR RECYCLING OF MATERIALS IN ACCORDANCE WITH THE CALIFORNIA GREEN BUILDING STANDARDS CODE, AS ADOPTED BY THE CITY OF CARLSBAD.

SHEET KEYNOTES

A. REMOVE AND SALVAGE WALL MOUNTED DOOR STOP. RETURN TO OWNER

B. IF REQUIRED, REMOVE 1" PLANT WATER FOR INSTALLATION OF ELEC DUCT. PROTECT 1" RISER TO WALL MOUNTED HOSE RACK DURING CONSTRUCTION.

C-4

REGISTERED PROFESSIONAL ENGINEER JOSE A. CUEVAS No. C63541 Exp. 9/30/24 CIVIL STATE OF CALIFORNIA
11/22/2023

Kennedy Jenks
9325 SKY PARK COURT, SUITE 300
SAN DIEGO, CA 92123
858-676-7500

SUBMITTED: TIMOTHY WATERS 11/22/2023
PROJECT MANAGER DATE

DATE	INITIAL	REVISION DESCRIPTION	DATE	INITIAL	DATE	INITIAL
ENGINEER OF WORK			OTHER APPROVAL		ACCEPTED	

SHEET 8 | CITY OF CARLSBAD UTILITIES DEPARTMENT | SHEETS 25

IMPROVEMENT PLAN FOR:
CIVIL DEMO AND SITE PLAN
POINSETTIA LIFT STATION GENERATOR REPLACEMENT

ACCEPTED BY: DAVE PADILLA
Dave Padilla 12/19/2023
ENGINEERING MANAGER DATE

DWN BY: EA
CHKD BY: JC
RVWD BY: PT

PROJECT NO. 3840-23
DRAWING NO. 540-9

FINAL SUBMITTAL
(FOR CONSTRUCTION)

DocuSign Envelope ID: 22E0CD66-5F4E-491C-A1CF-7BC34D603F05

Plot Date: 11/27/2023 3:48 PM
User: ERICK ALMALEL

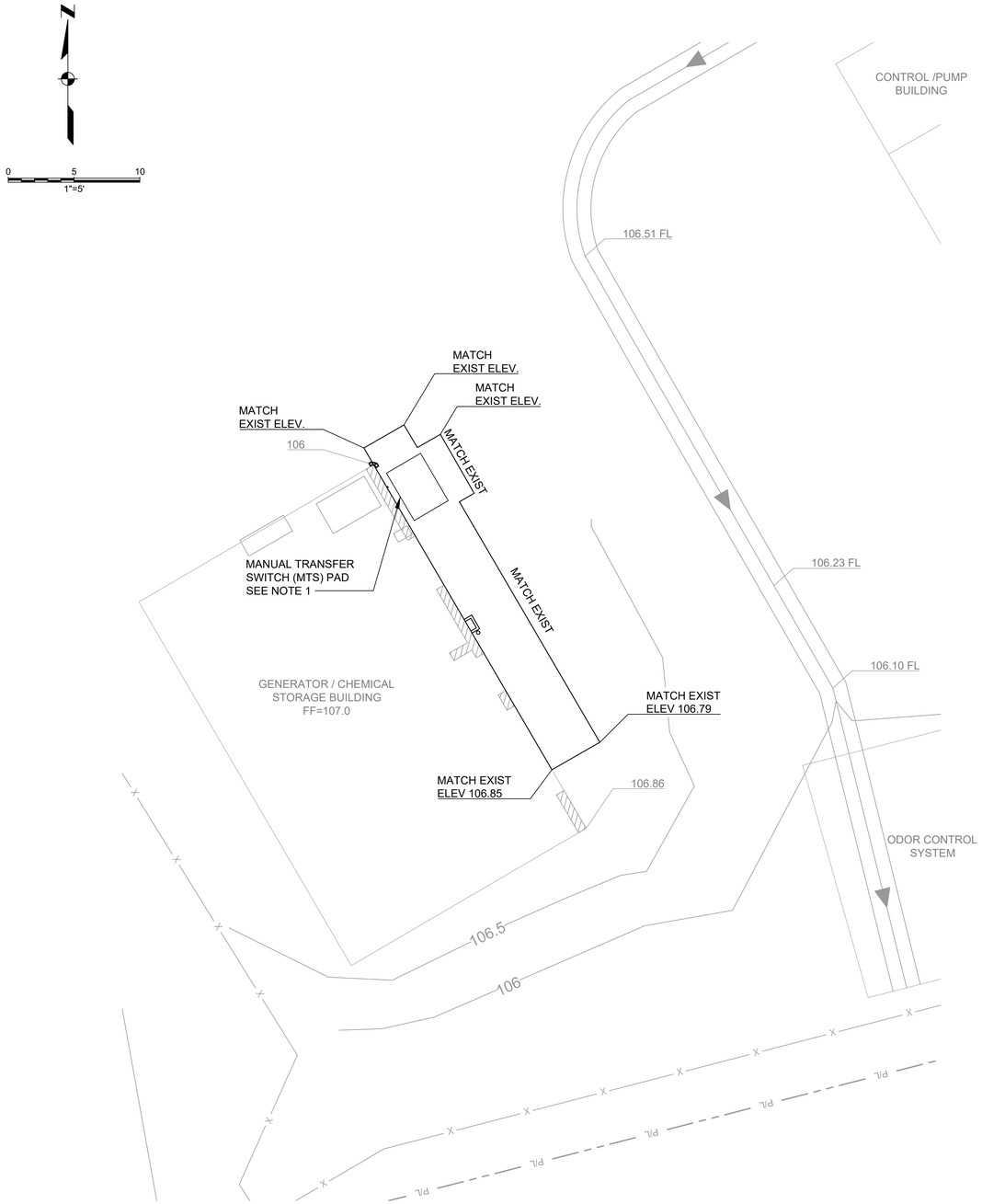

GRADING PLAN

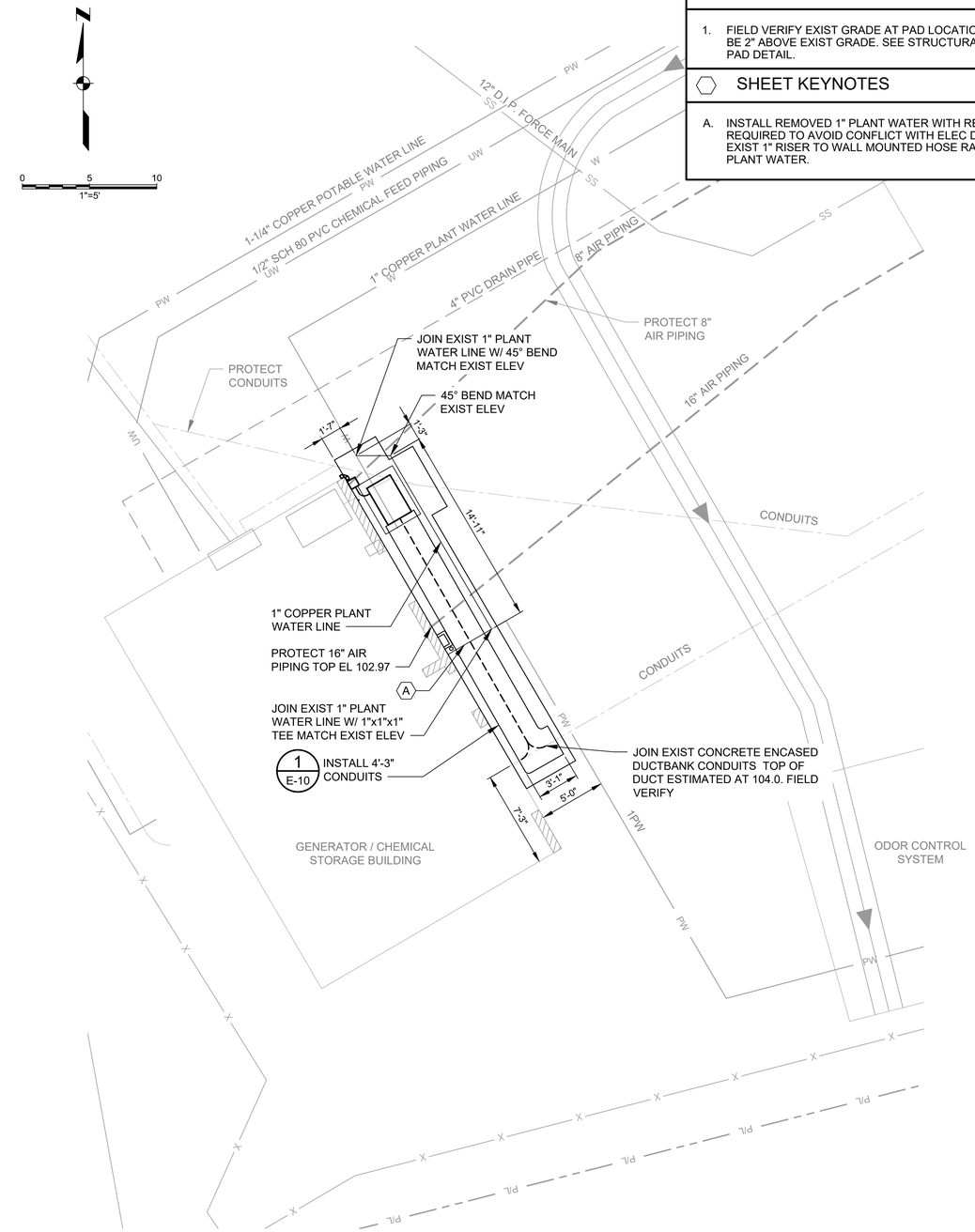

UTILITY PLAN

GENERAL SHEET NOTES

1. FIELD VERIFY EXIST GRADE AT PAD LOCATION. TOP OF PAD SHALL BE 2" ABOVE EXIST GRADE. SEE STRUCTURAL DETAIL S-3342 FOR PAD DETAIL.

SHEET KEYNOTES

A. INSTALL REMOVED 1" PLANT WATER WITH REVISE ELEVATIONS AS REQUIRED TO AVOID CONFLICT WITH ELEC DUCT. RECONNED TO EXIST 1" RISER TO WALL MOUNTED HOSE RACK AND TO EXIST 1" PLANT WATER.

FINAL SUBMITTAL
(FOR CONSTRUCTION)

REGISTERED PROFESSIONAL ENGINEER JOSE A. CUEVAS No. C63541 Exp. 9/30/24 CIVIL STATE OF CALIFORNIA
11/22/2023

Kennedy Jenks
9325 SKY PARK COURT, SUITE 300
SAN DIEGO, CA 92123
858-676-7500

SUBMITTED: TIMOTHY WATERS 11/22/2023
PROJECT MANAGER DATE

DATE	INITIAL	REVISION DESCRIPTION	DATE	INITIAL	DATE	INITIAL
ENGINEER OF WORK			OTHER APPROVAL		ACCEPTED	

C-5

SHEET 9 | CITY OF CARLSBAD UTILITIES DEPARTMENT | SHEETS 25

IMPROVEMENT PLAN FOR:
CIVIL GRADING AND UTILITY PLAN
POINSETTIA LIFT STATION GENERATOR REPLACEMENT

ACCEPTED BY: DAVE PADILLA
Dave Padilla 12/19/2023
ENGINEERING MANAGER DATE

DWN BY: EA
CHKD BY: JC
RVWD BY: PT

PROJECT NO. 3840-23
DRAWING NO. 540-9

DocuSign Envelope ID: 22E0CD66-5F4E-491C-A1CF-7BC34D603F05

Plot Date: 11/27/2023 3:48 PM
User: ERICK ALMALEL

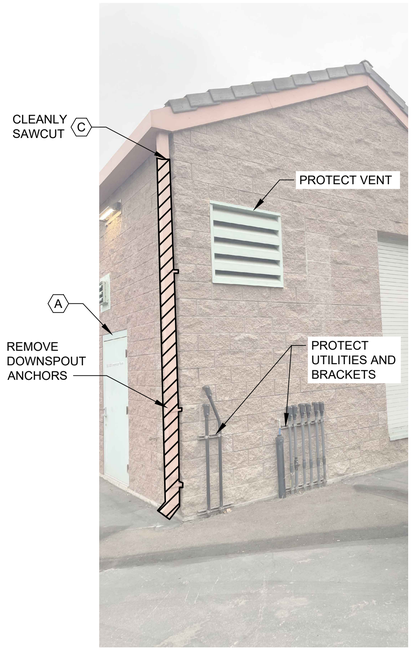

1 C-4 GENERATOR/CHEMICAL STORAGE BUILDING DOWNSPOUT DEMOLITION DETAIL
SCALE: NTS

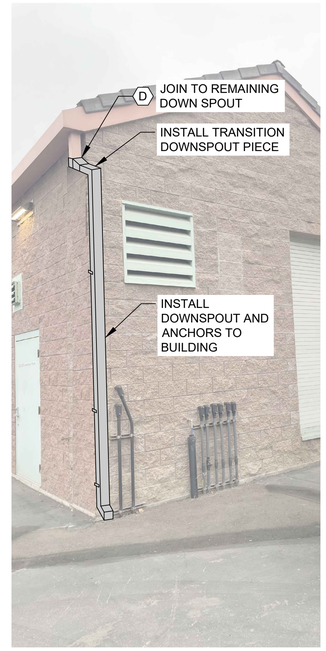

2 C-4 GENERATOR/CHEMICAL STORAGE BUILDING DOWNSPOUT MODIFICATION DETAIL
SCALE: NTS

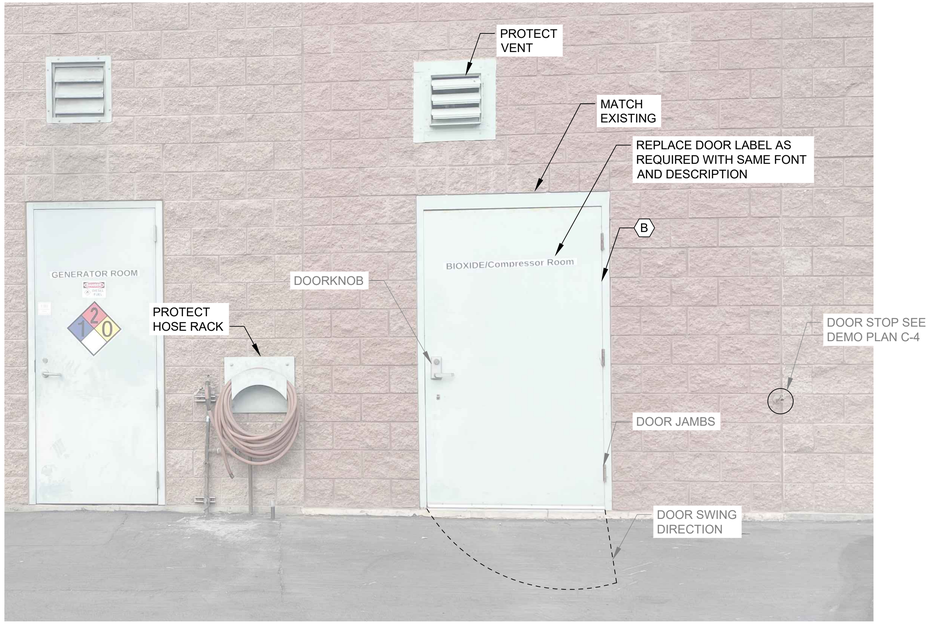

3 C-4 GENERATOR/CHEMICAL STORAGE BUILDING DOOR MODIFICATION DETAIL
SCALE: NTS

GENERAL SHEET NOTES

1. DOWNSPOUT AND DOOR TO MATCH EXISTING MATERIALS, FINISHES, AND PAINTED TO MATCH EXISTING.
2. PATCH ANY HOLES ON GENERATOR/CHEMICAL STORAGE BUILDING WITH CONCRETE TO MATCH EXISTING COLORS AND TEXTURE.
3. PROVIDE ATTACHMENTS TO BUILDING WALL AS REQUIRED. SEE STRUCTURAL SHEETS FOR ADDITIONAL NOTES.
4. UPON COMPLETION OF DOWNSPOUT INSTALLATION CONDUCT WATER FLOW TEST IN PRESENCE OF ENGINEER AND/OR OWNER TO ENSURE NO LEAKS ALONG DOWN SPOUTS ARE DETECTED.

SHEET KEYNOTES

A. REMOVE EXISTING RIGHT-HAND REVERSE DOOR, DOOR FRAME AND FINISH HARDWARE IN THEIR ENTIRETY. PREPARE ROUGH OPENING READY TO RECEIVE NEW DOOR AND DOOR FRAME ASSEMBLY.

B. PROVIDE AND INSTALL NEW LEFT-HAND REVERSE GALVANNEALED DOOR AND DOOR FRAME IN EXISTING ROUGH OPENING. FIELD VERIFY SIZE PRIOR TO ORDERING. PROVIDE NEW DOOR HARDWARE TO MATCH EXISTING REMOVED HARDWARE FROM ORIGINAL DOOR (INCLUDE DOOR CLOSER WITH HOLD OPEN ARM. DO NOT REUSE EXISTING REMOVED DOOR HARDWARE). FUNCTION AND FINISH TO MATCH EXISTING, FIELD VERIFY. PAINT NEW DOOR AND DOOR FRAME WITH EXTERIOR SEMI-GLOSS LATEX ENAMEL. COLOR TO MATCH EXISTING, FIELD VERIFY.

C. EXISTING DOWNSPOUT WITH BOTTOM ELBOW TURNOUT AT EAST CORNER OF NORTH WALL TO BE REMOVED/SALVAGED/RELOCATED TO NORTH CORNER OF EAST WALL. ROUGHLY 12" OF DOWNSPOUT LEADER FROM EXISTING GUTTER TO REMAIN.

D. PROVIDE TRANSITION DOWNSPOUT PIECE OF SAME SIZE, PROFILE, AND COLOR FROM REMAINING LEADER TO TOP OF DOWNSPOUT AT NEW LOCATION. PROVIDE STRAPS (TO MATCH EXISTING) AS REQUIRED FOR SECURED FASTENING OF DOWNSPOUT TO WALL.

FINAL SUBMITTAL
(FOR CONSTRUCTION)

REGISTERED PROFESSIONAL ENGINEER JOSE A. CUEVAS No. C63541 Exp. 9/30/24 CIVIL STATE OF CALIFORNIA
11/22/2023

Kennedy Jenks
9325 SKY PARK COURT, SUITE 300
SAN DIEGO, CA 92123
858-676-7500

SUBMITTED: TIMOTHY WATERS 11/22/2023
PROJECT MANAGER DATE

DATE	INITIAL	REVISION DESCRIPTION	DATE	INITIAL	DATE	INITIAL
ENGINEER OF WORK			OTHER APPROVAL		ACCEPTED	

C-6

SHEET 10 | CITY OF CARLSBAD UTILITIES DEPARTMENT | SHEETS 25

IMPROVEMENT PLAN FOR:
CIVIL DETAILS
POINSETTIA LIFT STATION GENERATOR REPLACEMENT

ACCEPTED BY: DAVE PADILLA
Dave Padilla 12/19/2023
ENGINEERING MANAGER DATE

DWN BY: EA
CHKD BY: JC
RVWD BY: PT

PROJECT NO. 3840-23
DRAWING NO. 540-9

DocuSign Envelope ID: 22E0CD66-5F4E-491C-A1CF-7BC34D603F05

Plot Date: 11/27/2023 3:49 PM

User: ERICK ALMALEL

ABBREVIATIONS

'	FOOT, FEET
"	INCH, INCHES
#	NUMBER
%	PERCENT
&	AND
@	AT
±	APPROXIMATELY
<	LESS THAN
=	EQUALS
>	GREATER THAN
A	AMPERE(-S)
A/C	AIR CONDITIONING
A/D	ANALOG TO DIGITAL
A/M	AUTO/MANUAL
ABAN(-D)	ABANDON(-ED)
AC	ALTERNATING CURRENT
AF	AMPERE FRAME
AFCI	ARC-FAULT CIRCUIT INTERRUPTER
AFF	ABOVE FINISHED FLOOR
AFG	ABOVE FINISHED GRADE
AI	ANALOG INPUT
AIC	AMPERES INTERRUPTING CAPACITY
ANN	ANNUNCIATOR
ANT	ANTENNA
AO	ANALOG OUTPUT
APPROX	APPROXIMATE(-LY)
ARCH	ARCHITECT(-URAL)
AS	AMMETER SWITCH
ASD	ADJUSTABLE SPEED DRIVE (DC)
AT	AMPERE TRIP
ATS	AUTOMATIC TRANSFER SWITCH
AUTO	AUTOMATIC
AUX	AUXILIARY
AWG	AMERICAN WIRE GAGE
BATT	BATTERY
BC	BARE COPPER
BKR	BREAKER
C	CONDUCTOR, CONTACT
C/S	CONISTANT SPEED
CAB	CABINET
CALC(S)	CALCULATION(S)
CAT	CATEGORY
CB	CATCH BASIN
CCTV	CLOSED-CIRCUIT TELEVISION
CHEM	CHEMI(-CAL, -STRY)
CID1	CLASSIFICATION I, DIVISION 1
CID2	CLASSIFICATION I, DIVISION 2
CKT	CIRCUIT
CLR	CLEAR(-ANCE)
CLSM	CONTROLLED LOW STRENGTH MATERIAL
CO	CONDUIT ONLY
COAX	COAXIAL
COM	COMMON
COMM	COMMUNICATION
COND	CONDUIT
CPT	CONTROL POWER TRANSFORMER
CR	CONTROL RELAY
CT	CURRENT TRANSFORMER
CTRL	CONTROL
CU IN	CUBIC INCH(-ES)
DC	DIRECT CURRENT
DCS	DISTRIBUTED CONTROL SYSTEM
DEG	DEGREE(-S)
DEG C	DEGREES CELSIUS
DEG F	DEGREES FARENHEIT
DEMO	DEMOLISH
DI	DISCRETE INPUT
DIA	DIAMETER
DIAG	DIAGRAM
DISC	DISCONNECT
DISTR	DISTRIBUTION
DO	DISCRETE OUTPUT
DPDT	DOUBLE POLE, DOUBLE THROW
DPST	DOUBLE POLE, SINGLE THROW
DR	DOOR
DTL(-S)	DETAIL(-S)
DUP	DUPLEX
EFFIC	EFFICIENCY
EFFL	EFFLUENT
ELEC	ELECTRIC(-AL)
ELEM	ELEMENTARY
EMERG	EMERGENCY
ENCL	ENCLOSURE
ENET	ETHERNET
ENGR	ENGINEER
EPA	ENVIRONMENTAL PROTECTION AGENCY
EQPM	EQUIPMENT
EST	ESTIMATE(-D)
E-STOP	EMERGENCY STOP
ETC	ET CETERA
ETM	ELAPSED TIME METER
EUSERC	ELECTRIC UTILITY SERVICE EQUIPMENT REQUIREMENTS COMMITTEE
EXIST	EXISTING
EXP	EXPANSION
EXT	EXTERNAL
FA	FIRE ALARM
FACIL	FACILIT(-Y, -IES)
FDR	FEEDER
FIG	FIGURE
FLA	FULL LOAD AMPERES
FLEX	FLEXIBLE
FO	FIBER OPTIC
FREQ	FREQUENCY
FT	FOOT, FEET
FU	FUSE
FUT	FUTURE
FVNR	FULL VOLTAGE, NON REVERSING
FVR	FULL VOLTAGE, REVERSING
FWD	FORWARD
G	GROUND (ELECTRICAL)
GAC	GRANULAR ACTIVATED CARBON
GAL	GALLON(-S)
GFCI	GROUND-FAULT CIRCUIT INTERRUPTER
GND	GROUND
GRS	GALVANIZED RIGID STEEL
H	HIGH, HEIGHT
HD	HEAT DETECTOR
HDPE	HIGH DENSITY POLYETHYLENE
HGR	HANGER
HH	HANDHOLE
HMI	HUMAN MACHINE INTERFACE
HOA	HAND-OFF-AUTOMATIC
HOR	HAND-OFF-REMOTE
HP	HORSEPOWER
HR(S)	HOUR(-S)
HTR	HEATER
HVAC	HEATING, VENTILATING, AND AIR CONDITIONING
HZ	HERTZ (CYCLES PER SECOND)
I&C	INSTRUMENTATION AND CONTROL
I/O	INPUT/OUTPUT
IEEE	INSTITUTE OF ELECTRICAL AND ELECTRONICS ENGINEERS
IL	INDICATING LIGHT
IN	INCH(-ES)
INST	INSTANTANEOUS
INSTR	INSTRUMENT(-ATION)
IP	INTERNET PROTOCOL
IR	INFRARED
IS	INTRINSICALLY SAFE
ISA	INTERNATIONAL SOCIETY OF AUTOMATION
ISO	ISOLAT(-E, -ION)
ISR	INTRINSICALLY SAFE RELAY
JB	JUNCTION BOX
KA	KILOAMPERE(-S)
KCMIL	THOUSANDS OF CIRCULAR MILS
KHZ	KILOHERTZ
KV	KILOVOLT(-S)
KVA	KILOVOLT-AMPERE(-S)
KVAR	KILOVOLT-AMPERE(-S) REACTIVE
KVARH	KILOVOLT-AMPERE REACTIVE HOUR(-S)
KW	KILOWATT(-S)
KWH	KILOWATT HOUR(-S)
L	LENGTH, LINE
LA	LIGHTNING ARRESTER
LAN	LOCAL AREA NETWORK
LB(-S)	POUND(-S)
LCP	LOCAL CONTROL PANEL
LCS	LOCAL CONTROL STATION
LEL	LOWER EXPLOSIVE LIMIT
LOC	LOCATION
LOR	LOCAL-OFF-REMOTE
LOTO	LOCK-OUT, TAG-OUT
LP	LIGHTING PANELBOARD
L-R	LOCAL-REMOTE
LS	LIMIT SWITCH
LT	LIGHT
LTG	LIGHTING
LV	LOW VOLTAGE
mA	MILLIAMPERE(-S)
MAX	MAXIMUM
MCB	MAIN CIRCUIT BREAKER
MCC	MOTOR CONTROL CENTER
MCP	MOTOR CIRCUIT PROTECTOR
MECH	MECHANICAL
MFR	MANUFACTURER
MH	MANHOLE
MHZ	MEGAHERTZ
MIL(-S)	ONE-THOUSANDTH OF AN INCH
MIN	MINIMUM, MINUTE(-S)
MISC	MISCELLANEOUS
MLO	MAIN LUGS ONLY
MM	MULTIMODE
MOCP	MAXIMUM OVERCURRENT PROTECTION
MOD(-S)	MODIF(-Y, -ICATIONS)
MOV	MOTOR OPERATED VALVE
MT(-D, -G)	MOUNT(-ED, -ING)
MTR	MOTOR
MTS	MANUAL TRANSFER SWITCH
MV	MEDIUM VOLTAGE
N	NORTH, NEUTRAL
N/A	NOT APPLICABLE
NAOCL	SODIUM HYPOCHLORITE
NAOH	SODIUM HYDROXIDE
NC	NORMALLY CLOSED
NEC	NATIONAL ELECTRICAL CODE (NFPA 70)
NECA	NATIONAL ELECTRICAL CONTRACTORS ASSOCIATION
NEMA	NATIONAL ELECTRICAL MANUFACTURER'S ASSOCIATION
NETA	INTERNATIONAL ELECTRICAL TESTING ASSOCIATION
NFC	NOT FOR CONSTRUCTION
NFPA	NATIONAL FIRE PROTECTION ASSOCIATION
NH3	AMMONIA
NIC	NOT IN CONTRACT
NO	NORMALLY OPEN, NUMBER
NORM	NORMAL
NTS	NOT TO SCALE
O/C	OPEN/CLOSE
O3	OZONE
ODP	OPEN DRIP PROOF
OFCI	OWNER FURNISHED, CONTRACTOR INSTALLED
OIT	OPERATOR INTERFACE TERMINAL
OL	THERMAL OVERLOAD RELAY
ORIG	ORIGINAL
OSC	OPEN/STOP/CLOSE
OT	OVER TEMPERATURE
P	POLE
PA	PUBLIC ADDRESS
PB	PULLBOX, PUSHBUTTON
PC(-S)	PIECE(-S), PHOTOCELL
PCC	POINT OF COMMON COUPLING
PE	PHOTOELECTRIC
PF	POWER FACTOR
PFR	POWER FACTOR RELAY
PH	PHASE
PLC	PROGRAMMABLE LOGIC CONTROLLER
PM	POWER MONITOR
PNL	PANEL
PNLBD	PANELBOARD
POE	POWER OVER ETHERNET
PP	POWER POLE
PRI	PRIMARY
PRV	PRESSURE RELIEF VALVE, PRESSURE REDUCING VALVE
PS	POWER SUPPLY
PT(-S)	POTENTIAL TRANSFORMER
PVC	POLYVINYL CHLORIDE
PWR	POWER
R, RAD	RADIUS
RCPT	RECEPTACLE
RCT	REPEAT CYCLE TIMER
RIO	REMOTE INPUT/OUTPUT
RM	ROOM
RMT	REMOTE
RPM	REVOLUTIONS PER MINUTE
RST	RESET
RT	RESET TIMER
RTU	REMOTE TELEMETRY UNIT
RVSS	REDUCED VOLTAGE, SOLID STATE
S/S	START/STOP
SCADA	SUPERVISORY CONTROL AND DATA ACQUISITION
SCR	SILICON CONTROLLED RECTIFIER
SD	SMOKE DETECTOR
SEC	SECONDARY
SER	SERVICE ENTRANCE RATED
SGNL	SIGNAL
(SH)	SHIELDED
SHT	SHEET
SM	SINGLEMODE
SP	SET POINT
SPD	SURGE PROTECTIVE DEVICE
SPDT	SINGLE POLE, DOUBLE THROW
SPEC(-S)	SPECIFICATION(-S)
SS	STAINLESS STEEL, SOLID STATE
STB	SHORTING TERMINAL BLOCK
STD(-S)	STANDARD(-S)
STL	STEEL
STP	SHIELDED TWISTED PAIR
STRC	STRUCTUR(-E, -AL)
SWBD	SWITCHBOARD
SWGR	SWITCHGEAR
SYNC	SYNCHRONIZING
T	TIME(-R)
TB	TERMINAL BLOCK
TC	TRAY CABLE
TCP	TRANSMISSION CONTROL PROTOCOL
TEFC	TOTALLY ENCLOSED FAN COOLED
TEL	TELEPHONE
TEMP	TEMPERATURE, TEMPORARY
TENV	TOTALLY ENCLOSED NON-VENTILATED
THRU	THROUGH
TOT	TOTAL, TOTALIZE(R)
TSTAT	THERMOSTAT
TYP	TYPICAL
UG	UNDERGROUND
UL	UNDERWRITERS LABORATORIES
UNKN	UNKNOWN
UPS	UNINTERRUPTIBLE POWER SUPPLY
UTP	UNSHIELDED TWISTED PAIR
UV	ULTRAVIOLET
V	VOLTS
V/S	VARIABLE SPEED
VA	VOLT-AMPERES
VAR	VARIES, VARIABLE, VOLT-AMPERES REACTIVE
VCP	VENDOR CONTROL PANEL
VFD	VARIABLE FREQUENCY DRIVE (AC)
VFI	VACUUM FAULT INTERRUPTER
VS	VOLTMETER SWITCH
W	WIDE, WIDTH, WIRE, WATTS, WEST
W/	WITH
W/O	WITHOUT
WAN	WIDE AREA NETWORK
WHDM	WATT-HOUR DEMAND METER
WHM	WATT-HOUR METER
WP	WEATHERPROOF, WEATHER PROTECTED
WR	WEATHER RESISTANT
WTP	WATER TREATMENT PLANT
WTR	WATER
WW	WASTEWATER
WWTP	WASTEWATER TREATMENT PLANT
XFMR	TRANSFORMER
XP	EXPLOSION PROOF

ELECTRICAL NOTES

1. SHEETS E-1 THROUGH E-3 CONTAIN GENERALIZED ABBREVIATIONS AND LEGENDS. THIS CONTRACT MAY NOT USE ALL INFORMATION SHOWN ON THOSE SHEETS.
2. THE INSTALLATION OF ALL EQUIPMENT, RACEWAYS, CONDUCTORS, AND CABLES SHOWN ON THESE DRAWINGS OR DESCRIBED IN THE SPECIFICATIONS SHALL CONFORM TO THE REQUIREMENTS SET FORTH IN THE LATEST EDITIONS OF THE NATIONAL ELECTRICAL CODE AND ALL APPLICABLE LOCAL CODES AND UTILITY COMPANY STANDARDS. IT IS THE CONTRACTOR'S RESPONSIBILITY TO CONTACT THE UTILITY COMPANY AND VERIFY THEIR REQUIREMENTS.
3. ELECTRICAL CONTRACTOR SHALL VISIT THE SITE PRIOR TO BIDDING THE PROJECT TO VERIFY THE SCOPE OF WORK WITH FIELD CONDITIONS. PARTICULAR ATTENTION SHOULD BE GIVEN TO NEW CONDUIT RUNS IN EXISTING BUILDINGS.
4. NOTIFY THE ENGINEER IMMEDIATELY IN WRITING IF CONFLICTS IN EQUIPMENT LOCATIONS ARE DISCOVERED OR IF PROBLEMS ARISE DUE TO FIELD CONDITIONS, LACK OF INFORMATION OR ANY OTHER REASON. NO PAYMENT WILL BE MADE FOR CHANGES WHICH HAVE NOT BEEN FAVORABLY REVIEWED BY THE ENGINEER.
5. CONDUIT ROUTING SHOWN ON PLAN DRAWINGS IS DIAGRAMMATIC ONLY. RACEWAYS SHALL BE INSTALLED IN A MANNER TO PREVENT CONFLICTS WITH EQUIPMENT OR STRUCTURAL CONDITIONS. EXPOSED RACEWAYS SHALL BE INSTALLED PARALLEL OR PERPENDICULAR TO BEAMS AND WALLS. REFER ALSO TO THE CONTRACT SPECIFICATIONS.
6. VERIFY THE EXACT LOCATION OF TERMINAL BOXES AND CONDUIT ENTRANCES TO ALL EQUIPMENT AGAINST APPROVED SHOP DRAWINGS BEFORE STUBBING UP CONDUITS. CONDUIT STUB-UPS SHALL NOT BE MORE THAN 6 INCHES FROM THE CENTERLINE OF TERMINAL BOXES.
7. CONNECTIONS BETWEEN RIGID CONDUIT AND MOTOR TERMINAL BOXES OR SIMILAR EQUIPMENT SUBJECT TO VIBRATION SHALL BE FLEXIBLE LIQUID-TIGHT CONDUIT.
8. CONDUITS SHALL BE TERMINATED SO AS TO PERMIT NEAT CONNECTION TO MOTORS AND OTHER EQUIPMENT.
9. CONDUITS FOR FUTURE EQUIPMENT OR EXTENSIONS SHALL BE TERMINATED AS SHOWN IN THE DETAILS OR AS SPECIFIED.
10. LOCATIONS OF PULLBOXES ARE APPROXIMATE. COORDINATE EXACT LOCATION IN THE FIELD TO ENSURE 6 INCHES (MINIMUM) CLEARANCE FROM MECHANICAL PIPING FLOW LINES.
11. ONLY MAJOR PULLBOXES ARE SHOWN. PROVIDE ADDITIONAL PULLBOXES WHERE REQUIRED TO MAKE A WORKABLE INSTALLATION.
12. PERFORM WORK IN ACCORDANCE WITH THE DETAILS WHETHER OR NOT THEY ARE REFERENCED ON THE DRAWINGS.
13. VERIFY ALL COLOR REQUIREMENTS BEFORE ORDERING MATERIALS.
14. THE WIRING DIAGRAMS, QUANTITY AND SIZE OF WIRES AND CONDUIT REPRESENT A SUGGESTED ARRANGEMENT BASED UPON SELECTED STANDARD COMPONENTS OF ELECTRICAL EQUIPMENT. MODIFICATIONS ACCEPTABLE TO THE ENGINEER MAY BE MADE BY THE CONTRACTOR TO ACCOMMODATE EQUIPMENT ACTUALLY PURCHASED. THE BASIC SEQUENCE AND METHOD OF CONTROL MUST BE MAINTAINED AS INDICATED ON THE DRAWINGS AND/OR SPECIFICATIONS.
15. REFER TO THE MECHANICAL DRAWINGS FOR CERTAIN CONTROL DIAGRAMS, EXACT LOCATIONS OF MECHANICAL EQUIPMENT, AND FOR CERTAIN CONNECTIONS TO BE MADE TO ELECTRICAL CIRCUITS.
16. CONDUIT SIZE AND FILL SHALL BE AS INDICATED ON THE CONDUIT AND CABLE SCHEDULES. WHERE NO SIZE IS SHOWN, THE CONDUIT SHALL BE SIZED IN ACCORDANCE WITH THE LATEST EDITION OF THE NATIONAL ELECTRICAL CODE ADOPTED BY THE AUTHORITY HAVING JURISDICTION. MINIMUM CONDUIT SIZE IS 3/4 INCH, EXCEPT WHERE ENCASED OR BURIED. MINIMUM ENCASED OR BURIED CONDUIT SIZE IS 1 INCH.
17. PROVIDE EXPANSION OR EXPANSION AND DEFLECTION FITTINGS FOR ALL CONDUIT RUNS CROSSING EXPANSION JOINTS. REFER TO THE STRUCTURAL DRAWINGS FOR LOCATIONS OF EXPANSION JOINTS.
18. PROVIDE 3/16 INCH NYLON PULL ROPE IN EACH EMPTY CONDUIT.
19. FOR LIGHTING AND RECEPTACLE SYSTEMS, ONLY CIRCUIT NUMBERS ARE SHOWN. PROVIDE ALL NECESSARY CONDUITS, WIRES, FITTINGS, JUNCTION BOXES AND NECESSARY COMPONENTS SHOWN OR NOT SHOWN ON THE DRAWINGS, TO MAKE THE ELECTRICAL INSTALLATION COMPLETE AND OPERATIONAL. SIZE CONDUITS AND WIRING IN ACCORDANCE WITH THE NATIONAL ELECTRICAL CODE. ALL CONDUIT RUNS SHALL BE CONCEALED UNLESS INDICATED OTHERWISE. CIRCUIT LOADING SHALL BE AS INDICATED IN THE PANEL SCHEDULES. ALL LIGHTING AND RECEPTACLE CIRCUITS SHALL INCLUDE GROUND WIRE.
20. MOUNT LUMINAIRES ACCORDING TO THE MOUNTING HEIGHT GIVEN ON THE DRAWINGS, WITH THE DISTANCE BEING MEASURED FROM THE BOTTOM OF THE LUMINAIRE TO THE FINISHED FLOOR. PROVIDE APPROPRIATE BRACKETS AND HARDWARE FOR MOUNTING.
21. ALL RECEPTACLES IN OUTDOOR AND ANTICIPATED WET AREAS SHALL BE GROUND FAULT CIRCUIT INTERRUPTER RECEPTACLES WITH WEATHERPROOF WHILE IN-USE COVERS.
22. ALL FREE STANDING ELECTRICAL EQUIPMENT AND CONTROL PANELS SHALL BE SET ON CONCRETE HOUSEKEEPING PADS WITH LEVELING CHANNELS EMBEDDED IN THE PAD.
23. ALL PANELBOARDS SHALL BE MOUNTED SO THAT THE DISTANCE FROM THE CENTERLINE OF THE TOP CIRCUIT BREAKER OPERATING HANDLE IN THE UPPERMOST POSITION TO THE FINISHED FLOOR SHALL NOT EXCEED 6'-7".
24. ALL SURFACE MOUNTED PANELS AND PANELBOARDS ON THE INTERIOR OF EXTERIOR WALLS ABOVE GRADE OR IN OTHER LOCATIONS CONSIDERED DAMP OR WET SHALL BE MOUNTED SO AS TO MAINTAIN A 1/4 INCH (MINIMUM) AIR SPACE BETWEEN THE ENCLOSURE AND THE WALL.
25. PROVIDE LOCKOUTS IN STRICT ACCORDANCE WITH OWNER'S REQUIREMENTS.
26. REFER TO THE SINGLE LINE DIAGRAMS, EQUIPMENT ELEVATIONS, PANELBOARD SCHEDULES, AND COMPONENT/DEVICE LABELS IN THE CONTROL SCHEMATICS FOR NAMEPLATE INFORMATION. SEE THE CONTRACT SPECIFICATIONS FOR NAMEPLATE SIZE, COLOR, MATERIAL, AND PLACEMENT REQUIREMENTS.
27. "NORMAL" STATUS OF SWITCHES OR CONTACTS SHOWN IN CONTROL SCHEMATICS IS THE SHELF POSITION.
28. POLLUTION CONTROL LIMITS FOR THE SELECTION OF FINISH MATERIALS SHALL BE IN ACCORDANCE WITH THE CALIFORNIA GREEN BUILDING STANDARDS CODE, AS ADOPTED BY THE CITY OF CARLSBAD.

ELECTRICAL DEMOLITION NOTES

1. BIDDING CONTRACTORS SHALL VISIT THE SITE TO ASSESS THE SCOPE OF DEMOLITION, REMOVAL AND MODIFICATION WORK.
2. ELECTRICAL CONTRACTOR AND THE OWNER SHALL DE-ENERGIZE ALL WIRING PRIOR TO REMOVAL OF EQUIPMENT, DEVICES, MOTORS INSTRUMENTATION, CONTROL PANELS, ETC. CONTRACTOR SHALL OBTAIN PRIOR APPROVAL FROM THE OWNER.
3. EXPOSED RACEWAYS: REMOVE CONDUIT, WIRES, AND BOXES. PATCH TO MATCH EXISTING. FINISH ALL OPENINGS LEFT IN WALLS AND FLOORS.
4. CONCEALED CONDUITS IN THE SLAB: REMOVE EXISTING WIRES TO THE EXTENT POSSIBLE AND ABANDON CONDUITS IN THE SLAB. CUT CONDUIT FLUSH AND PATCH THE FLOOR TO MATCH EXISTING.
5. CONTROL PANELS: ELECTRICAL CONTRACTOR SHALL DE-ENERGIZE AND REMOVE ALL CONDUIT AND WIRE AS DESCRIBED IN NOTES 3 AND 4. CONTRACTOR SHALL REMOVE PANELS AS NOTED ON THE CONTRACT DRAWINGS.
6. MOTOR CONTROL CENTERS: DISCONNECT AND REMOVE ALL CONDUITS AND WIRING TO EXISTING STARTERS AND/OR BREAKERS, PANELBOARDS, BRANCH CIRCUITS, INTERLOCKS AND STATUS WIRING WITHIN MCC.
7. REFER TO THE CONTRACT SPECIFICATIONS FOR ADDITIONAL ELECTRICAL DEMOLITION AND REMOVAL REQUIREMENTS.
8. CONSTRUCTION AND DEMOLITION OPERATIONS SHALL INCORPORATE SALVAGE AND/OR RECYCLING OF MATERIALS IN ACCORDANCE WITH THE CALIFORNIA GREEN BUILDING STANDARDS CODE, AS ADOPTED BY THE CITY OF CARLSBAD.

E-1

FINAL SUBMITTAL
(FOR CONSTRUCTION)

REGISTERED PROFESSIONAL ENGINEER
JEFFREY R. JENKINS
No. E18977
Exp. 12/31/23
STATE OF CALIFORNIA
11/22/2023

Kennedy Jenks
9325 SKY PARK COURT, SUITE 300
SAN DIEGO, CA 92123
858-676-7500

SUBMITTED: TIMOTHY WATERS 11/22/2023
PROJECT MANAGER DATE

DATE	INITIAL	REVISION DESCRIPTION	DATE	INITIAL	DATE	INITIAL
ENGINEER OF WORK			OTHER APPROVAL		ACCEPTED	

SHEET 11 | CITY OF CARLSBAD UTILITIES DEPARTMENT | SHEETS 25

IMPROVEMENT PLAN FOR:
GENERAL ELECTRICAL
ABBREVIATIONS AND NOTES
POINSETTIA LIFT STATION GENERATOR REPLACEMENT

ACCEPTED BY: DAVE PADILLA
Dave Padilla 12/19/2023
ENGINEERING MANAGER DATE

DWN BY: DPH
CHKD BY: JRM
RVWD BY:

PROJECT NO. 3840-23

DRAWING NO. 540-9

DocuSign Envelope ID: 22E0CD66-5F4E-491C-A1CF-7BC34D603F05

Plot Date: 11/27/2023 3:49 PM
User: ERICK ALMALEL

SINGLE LINE DIAGRAM SYMBOLS

- BUS
- BUS (EXISTING)
- FEEDER
- FEEDER (EXISTING)
- X, 100A, 70A — AMPS FRAME; LOW VOLTAGE THERMAL-MAGNETIC CIRCUIT BREAKER; 3-POLE EXCEPT WHERE NOTED; X = CIRCUIT NUMBER OR LOCATION (SEE ELEVATION); AMPS TRIP
- X, 100A, MCP — AMPS CONTINUOUS; LOW VOLTAGE MOTOR CIRCUIT PROTECTOR; 3-POLE EXCEPT WHERE NOTED; X = CIRCUIT NUMBER OR LOCATION (SEE ELEVATION)
- 400AF, 200AT — LOW VOLTAGE DRAWOUT CIRCUIT BREAKER INCLUDING L-S-I-G SETTINGS UNLESS NOTED OTHERWISE; L = LONG TIME; S = SHORT TIME; I = INSTANTANEOUS; G = GROUND FAULT
- 52 — MEDIUM VOLTAGE DRAWOUT CIRCUIT BREAKER
- FVNR # — FULL VOLTAGE COMBINATION STARTER WITH CONTROL POWER TRANSFORMER; # = NEMA SIZE; FVR = REVERSING TYPE; FVNR = NON-REVERSING TYPE
- RVSS A — REDUCED VOLTAGE STARTER WITH CONTROL POWER TRANSFORMER; RATING IN AMPERES AS INDICATED; RVSS = SOLID STATE TYPE; RVAT = AUTO-TRANSFORMER TYPE
- VFD A — VARIABLE FREQUENCY DRIVE WITH CONTROL POWER TRANSFORMER; RATING IN AMPERES AS INDICATED
- 30A — DISCONNECT SWITCH; 3 POLE EXCEPT WHERE NOTED; RATING IN AMPERES AS INDICATED
- 30A, 25A — FUSED DISCONNECT SWITCH; 3 POLE EXCEPT WHERE NOTED; RATINGS IN AMPERES AS INDICATED
- 480:120 (3) — POTENTIAL TRANSFORMER; RATIO AND NUMBER OF PT'S AS INDICATED
- (3) — CURRENT TRANSFORMER; RATIO AND NUMBER OF CT'S AS INDICATED
- * — METERING DEVICE; * = METER TYPE; WHM = WATT HOUR METER; WM = WATT METER; AM = AMMETER; VM = VOLTMETER; PFM = POWER FACTOR METER; SSM = SOLID STATE METER
- # — RELAY DEVICE FUNCTION; # PER ANSI NUMBER C37.2

15/25	AUTO SYNCHRONIZER RELAY	50/51N	INST/TIME RESIDUALLY CONNECTED GND OVERCURRENT
25	SYNCHRONISM CHECK RELAY	51G	GND FAULT RELAY
27	UNDERVOLTAGE RELAY	52	POWER CIRCUIT BREAKER
27/59	UNDER/OVERVOLTAGE RELAY	55	POWER FACTOR TRIP RELAY
32	DIRECTIONAL POWER RELAY	60	VOLTAGE BALANCE
37	UNDERCURRENT RELAY	62	TIME DELAY
38	HIGH TEMP (BEARING)	65	GOVERNOR LOAD SHARING/SOFT LANDING CONTROL
39	VIBRATION RELAY	66	TIME BETWEEN STARTS RELAY
40	LOSS OF FIELD/UNDER EXCITATION RELAY	67	DIRECTIONAL REVERSE VAR/KW RELAY
41	FIELD CONTACTOR	71L	LOW OIL LEVEL RELAY
43	SELECTOR SWITCH	81O/U	OVER/UNDER FREQUENCY RELAY
46	CURRENT IMBALANCE RELAY	83	CONTROL POWER TRANSFORMER
47	PHASE SEQUENCE/FAILURE RELAY	86	UTILITY LOCKOUT RELAY
48	GROUND FAULT INCOMPLETE SEQUENCE RELAY	87TL	TRANSFORMER DIFFERENTIAL RELAY
49	HIGH TEMP (OIL OR STATOR)	87M	MOTOR DIFFERENTIAL RELAY
50/51	INST/TIME OVERCURRENT RELAY	90	VAR/PF AND CROSS CURRENT COMPENSATION CONTROLLER
50/51G	INST/TIME DIRECTLY CONNECTED GND OVERCURRENT RELAY		

- K — KEY INTERLOCK
- ST — SHUNT TRIP
- SSMP — SOLID STATE MOTOR PROTECTIVE DEVICE
- SPD — SURGE PROTECTIVE DEVICE
- EARTH GROUND CONNECTION
- LIGHTNING ARRESTOR AND SURGE CAPACITOR
- FLA, HP — MOTOR; HORSEPOWER AND FULL LOAD AMPERES AS INDICATED
- A, # KW — PACKAGED EQUIPMENT; LOAD (IN KW OR KVA) AND AMPERES AS INDICATED
- MOV — ELECTRICAL MOTOR OPERATED VALVE WITH INTEGRAL REVERSING STARTER
- TERMINATOR / POTHEAD
- POWER OR DISTRIBUTION TRANSFORMER; CONFIGURATION AND RATING AS INDICATED
- DELTA-WYE
- DELTA-WYE GROUNDED
- DELTA-DELTA
- GEN — GENERATOR; RATINGS AS INDICATED
- AUTOMATIC OR MANUAL TRANSFER SWITCH; RATING AND CONFIGURATION AS INDICATED
- 5 — CAPACITOR; RATING IN KVAR AS INDICATED
- A, SEC — NEUTRAL GROUNDING RESISTOR; CURRENT RATING IN AMPERES AS NOTED; TIME RATING IN SECONDS AS NOTED
- # — CONTACTOR; NUMBER INDICATES NEMA SIZE
- OVERLOAD (THERMAL OR SOLID STATE)
- 5A — FUSE; SIZE AS INDICATED
- AS — AMMETER SWITCH
- VS — VOLTMETER SWITCH
- RECEPTACLE, 120V
- SPECIAL RECEPTACLE, 208V OR 240V, 1-PHASE
- SPECIAL/WELDING RECEPTACLE, 208V OR 240V, 3-PHASE
- SPECIAL RECEPTACLE, 480V, 3-PHASE

CONTROL SCHEMATIC SYMBOLS

- CONDUCTORS - NOT CONNECTED
- CONDUCTORS - CONNECTED
- TERMINAL
- **, # — CONTROL DEVICE COIL; ** = TYPE; CR = CONTROL RELAY; TD = TIME DELAY RELAY; ISR = INTRINSICALLY SAFE RELAY; PC = PHOTOCELL
- CR 1 — NORMALLY OPEN CONTACT LINE REFERENCE; XXXX, XXXX — NORMALLY CLOSED CONTACT LINE REFERENCE
- SV-# — SOLENOID COIL
- CR# CR# — CONTACT; NORMALLY OPEN / CLOSED
- MCP, 5A — CIRCUIT BREAKER OR MCP AS NOTED; 1-POLE / 3-POLE
- OL — OVERLOAD (THERMAL OR SOLID STATE)
- DISCONNECT SWITCH; 1-POLE / 3-POLE
- M — MOTOR
- CONTROL POWER TRANSFORMER
- BATTERY
- 5A — FUSE; RATING IN AMPERES
- EARTH GROUND CONNECTION
- CHASSIS GROUND CONNECTION (NOT NECESSARILY EARTH GROUNDED)
- DI — DIGITAL INPUT TO PLC/RTU/DCS
- DIGITAL OUTPUT FROM PLC/RTU/DCS; NORMALLY OPEN
- DIGITAL OUTPUT FROM PLC/RTU/DCS; NORMALLY CLOSED
- AI — ANALOG INPUT TO PLC/RTU/DCS; 4-20 mA (UNLESS INDICATED OTHERWISE)
- AO — ANALOG OUTPUT FROM PLC/RTU/DCS; 4-20 mA (UNLESS INDICATED OTHERWISE)
- SINGLE POLE SWITCH; NORMALLY OPEN / CLOSED
- H O A, XOO, OOX — THREE-POSITION SELECTOR SWITCH; X: INDICATES CONTACTS CLOSED; H-O-A: HAND-OFF-AUTO; L-O-R: LOCAL-OFF-REMOTE; O-S-C: OPEN-STOP-CLOSE
- L R, XOO, OOX — TWO-POSITION SELECTOR SWITCH; X: INDICATES CONTACTS CLOSED; L-R: LOCAL-REMOTE; O-C: OPEN-CLOSE; A-M: AUTO-MANUAL
- O S C, XOO, OOX — THREE-POSITION SELECTOR SWITCH WITH SPRING-RETURN MOMENTARY CONTACT
- E-STOP E-STOP — EMERGENCY PUSHBUTTON; NORMALLY OPEN / CLOSED
- PUSHBUTTON; NORMALLY OPEN / CLOSED
- MULTI-POSITION SELECTOR SWITCH
- X — PUSH-TO-TEST INDICATING LIGHT; X = COLOR; A = AMBER; B = BLUE; G = GREEN; R = RED; W = WHITE
- X — INDICATING LIGHT
- ETM — ELAPSED TIME METER
- BUZZER
- BELL
- HORN
- RESISTANCE TEMPERATURE DETECTOR (RTD)
- HEATER
- COMMUNICATION JACK (ETHERNET UNLESS INDICATED OTHERWISE)
- RECEPTACLE, 120V
- 2.0Ω — NEUTRAL GROUNDING RESISTOR
- 1 — LOCATION SYMBOL; LEGEND SHOWN ON SCHEMATIC DRAWINGS; ALL DEVICES ARE LOCATED IN THE MCC UNLESS INDICATED OTHERWISE
- POTENTIOMETER
- REACTOR (LINE OR LOAD DEPENDING ON PLACEMENT)

SENSING SWITCHES		
CLOSE ON		SENSED VARIABLE
RISING	FALLING	
FS	FS	FLOW
LS	LS	LEVEL
PS	PS	PRESSURE
TS	TS	TEMPERATURE
LIMIT SWITCHES		
ZS		NORMALLY OPEN,CLOSE ON REACHING LIMIT
ZS		NORMALLY CLOSED, OPEN ON REACHING LIMIT
TORQUE SWITCH		
		NORMALLY CLOSED, OPEN ON INCREASING TORQUE

TIMED CONTACTS			
SYMBOL	NORMAL	OPEN TO CLOSED	CLOSED TO OPEN
TR	OPEN	DELAYED	INSTANTANEOUS
TR	CLOSED	INSTANTANEOUS	DELAYED
TR	OPEN	INSTANTANEOUS	DELAYED
TR	CLOSED	DELAYED	INSTANTANEOUS

E-2

FINAL SUBMITTAL
(FOR CONSTRUCTION)

REGISTERED PROFESSIONAL ENGINEER — BRADLEY R. MAHR — No. E18977 Exp. 12/31/23 — STATE OF CALIFORNIA
11/22/2023

Kennedy Jenks
9325 SKY PARK COURT, SUITE 300
SAN DIEGO, CA 92123
858-676-7500

SUBMITTED: TIMOTHY WATERS 11/22/2023
PROJECT MANAGER DATE

DATE	INITIAL	REVISION DESCRIPTION	DATE	INITIAL	DATE	INITIAL
ENGINEER OF WORK			OTHER APPROVAL		ACCEPTED	

SHEET 12 — CITY OF CARLSBAD, UTILITIES DEPARTMENT — SHEETS 25

IMPROVEMENT PLAN FOR:
GENERAL ELECTRICAL
LEGEND - I
POINSETTIA LIFT STATION GENERATOR REPLACEMENT

ACCEPTED BY: DAVE PADILLA
Dave Padilla 12/19/2023
ENGINEERING MANAGER DATE

DWN BY: DPH
CHKD BY: JRM
RVWD BY: -

PROJECT NO. 3840-23
DRAWING NO. 540-9

DocuSign Envelope ID: 22E0CD66-5F4E-491C-A1CF-7BC34D603F05

Plot Date: 11/27/2023 3:49 PM
User: ERICK ALMALEL

PLAN SYMBOLS

CONDUIT AND RACEWAYS

- CONDUIT - MULTIPLE IN DUCT BANK
- MULTIPLE CONDUIT RUN
- CONDUIT - ENCASED OR UNDERGROUND
- CONDUIT - EXPOSED OR CONCEALED
- P-135 — CALLOUT INDICATING CONDUIT PER SCHEDULE
- HOME RUN TO PANELBOARD OR AS INDICATED (3/4 " CONDUIT, 2 #12, 1 #12 GND UNLESS INDICATED OTHERWISE)
- FLEXIBLE CONDUIT
- CONDUIT RUN, CONTINUES ON SAME SHEET OR AS NOTED
- CONDUIT - CAPPED OR SEALED
- OPEN CIRCLE DENOTES UPWARD CONDUIT RISER
- SEMI CIRCLE DENOTES DOWNWARD CONDUIT RISER
- J — JUNCTION BOX
- HH-# — UNDERGROUND RACEWAY HANDHOLE DIMENSIONS AS NOTED
- MH-# — UNDERGROUND RACEWAY MANHOLE DIMENSIONS AS NOTED

EQUIPMENT

- M — MOTOR
- PANEL OR CABINET - AS LABELED SWBD, SWGR, MCC, LP, PNLBD, PLC, ETC

GROUNDING

- BARE COPPER GROUND TO GROUND WIRE IN SLAB, OR UNDERGROUND GROUND GRID, SIZE AS NOTED
- GROUND CONNECTION - BOLTED
- GROUND CONNECTION - EXOTHERMICALLY WELDED
- GROUND ROD - IN WELL WITH BOX
- GROUND ROD - BURIED

FIRE PROTECTION

- F — FIRE ALARM PULL STATION
- F — FIRE ALARM STROBE
- F — FIRE ALARM HORN
- F — FIRE ALARM HORN/STROBE
- SD — SMOKE DETECTOR
- HD — HEAT DETECTOR

LIGHTING

- A / * — LUMINAIRE CALLOUT
  A = LUMINAIRE TYPE
  * = APPROXIMATE MOUNTING HEIGHT AFF
  CLG = CEILING MOUNT
  (SEE LUMINAIRE SCHEDULE FOR MORE DETAILS)
- X-#a — LUMINAIRE - STRIP OR TROFFER TYPE (SWITCHED/UNSWITCHED)
  X = LIGHTING PANEL DESIGNATION
  # = CIRCUIT NUMBER
  a = SWITCH DESIGNATION
- WALL MOUNTED LUMINAIRE (SWITCHED/UNSWITCHED)
- PENDANT/CEILING MOUNTED LUMINAIRE (SWITCHED/UNSWITCHED)
- POLE, BRACKET, ARM, AND MOUNTED LUMINAIRE
- RECESSED CAN LUMINAIRE (SWITCHED/UNSWITCHED)
- EMERGENCY LUMINAIRE WITH SELF CONTAINED BATTERY
- WALL/CEILING MOUNTED EXIT LIGHT DIRECTIONAL ARROW WHERE INDICATED, SHADED AREA INDICATES ILLUMINATED FACE
- $ X-#a * — LIGHT SWITCH
  X = LIGHTING PANEL DESIGNATION
  # = CIRCUIT NUMBER
  a = SWITCH DESIGNATION
  * = SWITCH TYPE
  1 1 WAY
  3 3 WAY
  4 4 WAY
  D DIMMER
- M — MOTION SENSOR
- O — OCCUPANCY SENSOR
- PC — PHOTOCELL
- TC — TIME CLOCK

RECEPTACLES

- X-# * — DUPLEX RECEPTACLE, 120V, WALL MOUNT NEMA 5-20R CONFIGURATION
  X = LIGHTING PANEL DESIGNATION
  # = CIRCUIT NUMBER
  * = RECEPTACLE TYPE
  WP WEATHERPROOF
  XP EXPLOSION PROOF
  GFCI GROUND FAULT CIRCUIT INTERRUPTER
- X-# * — DUPLEX RECEPTACLE, 120V, FLOOR MOUNT NEMA 5-20R CONFIGURATION
- X-# A — SINGLE SPECIAL RECEPTACLE, 208V OR 240V, 1-PHASE
  X = PANEL DESIGNATION
  # = CIRCUIT NUMBER
  A = AMPERAGE
- X-# A — SINGLE SPECIAL/WELDING RECEPTACLE, 208V OR 240V, 3-PHASE
  X = PANEL DESIGNATION
  # = CIRCUIT NUMBER
  A = AMPERAGE
- X-# A — SINGLE SPECIAL RECEPTACLE, 480V, 3-PHASE
  X = PANEL DESIGNATION
  # = CIRCUIT NUMBER
  A = AMPERAGE

SECURITY AND COMMUNICATION

- ANTENNA
- VC * — VIDEO CAMERA
  * = TYPE
  F FIXED
  PTZ PAN-TILT-ZOOM
  360 360 DEGREE FIXED
- * — SECURITY ACCESS DEVICE
  * = TYPE
  CR CARD READER
  KS KEY SWITCH
  KP KEYPAD
  RF RADIO FREQUENCY ID
- TELEPHONE OUTLET WALL MOUNTED/FLOOR MOUNTED
- DATA OUTLET WALL MOUNTED/FLOOR MOUNTED
- TELEPHONE/DATA COMBINATION OUTLET WALL MOUNTED/FLOOR MOUNTED
- TV — TELEVISION ANTENNA/CABLE OUTLET

MISCELLANEOUS

- DISCONNECT SAFETY SWITCH
- INSTRUMENT
- $ X-# * — SWITCH - SPECIAL PURPOSE
  X = LIGHTING PANEL DESIGNATION
  # = CIRCUIT NUMBER
  * = SWITCH TYPE
  M MOTOR RATED
  K KEY OPERATED
  T TIMER
- T — THERMOSTAT

E-3

FINAL SUBMITTAL
(FOR CONSTRUCTION)

REGISTERED PROFESSIONAL ENGINEER — JEFFREY R. MOORE — No. E18977 Exp. 12/31/23 — STATE OF CALIFORNIA
11/22/2023

Kennedy Jenks
9325 SKY PARK COURT, SUITE 300
SAN DIEGO, CA 92123
858-676-7500

SUBMITTED: TIMOTHY WATERS 11/22/2023
PROJECT MANAGER DATE

DATE	INITIAL	REVISION DESCRIPTION	DATE	INITIAL	DATE	INITIAL
ENGINEER OF WORK			OTHER APPROVAL		ACCEPTED	

SHEET 13 — CITY OF CARLSBAD UTILITIES DEPARTMENT — SHEETS 25

IMPROVEMENT PLAN FOR:
GENERAL ELECTRICAL
LEGEND - II
POINSETTIA LIFT STATION GENERATOR REPLACEMENT

ACCEPTED BY: DAVE PADILLA
Dave Padilla 12/19/2023
ENGINEERING MANAGER DATE

DWN BY: DPH
CHKD BY: JRM
RVWD BY: --
PROJECT NO. 3840-23
DRAWING NO. 540-9

DocuSign Envelope ID: 22E0CD66-5F4E-491C-A1CF-7BC34D603F05

Plot Date: 11/27/2023 3:49 PM
User: ERICK ALMALEL

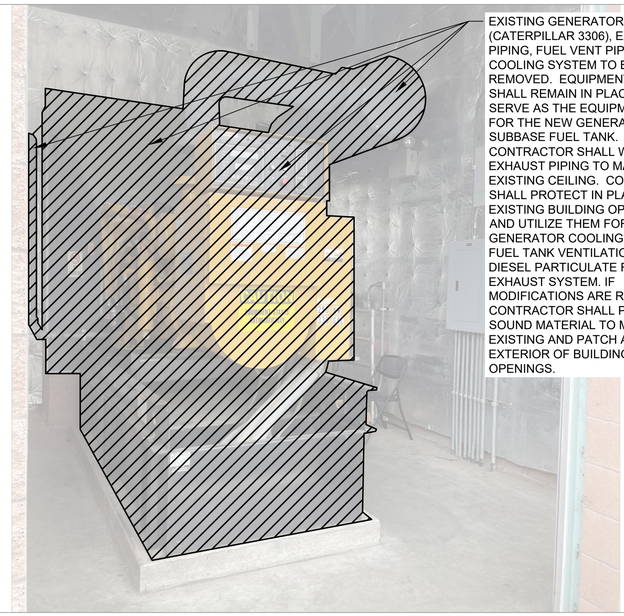

EXISTING GENERATOR (CATERPILLAR 3306), EXHAUST PIPING, FUEL VENT PIPING AND COOLING SYSTEM TO BE REMOVED. EQUIPMENT PAD SHALL REMAIN IN PLACE AND SERVE AS THE EQUIPMENT PAD FOR THE NEW GENERATOR AND SUBBASE FUEL TANK. CONTRACTOR SHALL WRAP NEW EXHAUST PIPING TO MATCH EXISTING CEILING. CONTRACTOR SHALL PROTECT IN PLACE EXISTING BUILDING OPENINGS AND UTILIZE THEM FOR NEW GENERATOR COOLING LOUVER, FUEL TANK VENTILATION AND DIESEL PARTICULATE FILTER EXHAUST SYSTEM. IF MODIFICATIONS ARE REQUIRED, CONTRACTOR SHALL PATCH SOUND MATERIAL TO MATCH EXISTING AND PATCH AND PAINT EXTERIOR OF BUILDING OPENINGS.

1 E-8 GENERATOR DEMOLITION

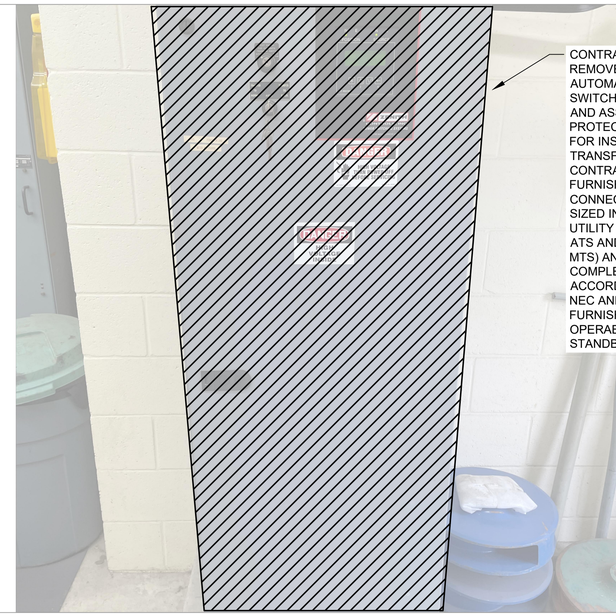

CONTRACTOR SHALL REMOVE THE EXISTING AUTOMATIC TRANSFER SWITCH ZENITH MX2000 AND ASSOCIATED CABLING. PROTECT EQUIPMENT PAD FOR INSTALLATION OF NEW TRANSFER SWITCH. CONTRACTOR SHALL FURNISH, INSTALL AND CONNECT NEW CABLES, SIZED IN KIND, BETWEEN UTILITY SWITCHBOARD AND ATS AND GENERATOR (VIA MTS) AND ATS. WIRE COMPLETE IN ACCORDANCE WITH THE NEC AND LOCAL CODES TO FURNISH A COMPLETE AND OPERABLE OPTIONAL STANDBY POWER SYSTEM.

2 E-9 AUTOMATIC TRANSFER SWITCH DEMOLITION

EXISTING EXHAUST PIPING TO BE REPLACED WITH NEW EXHAUST PIPING. CONTRACTOR SHALL PROTECT IN PLACE EXISTING BUILDING OPENING FOR EXHAUST PIPING AND UTILIZE THE OPENING FOR NEW DIESEL PARTICULATE FILTER EXHAUST SYSTEM. IF MODIFICATIONS ARE REQUIRED. CONTRACTOR SHALL PATCH SOUND MATERIAL TO MATCH EXISTING AND PATCH AND PAINT EXTERIOR OF BUILDING OPENINGS.

3 E-8 EXHAUST PIPING DEMOLITION

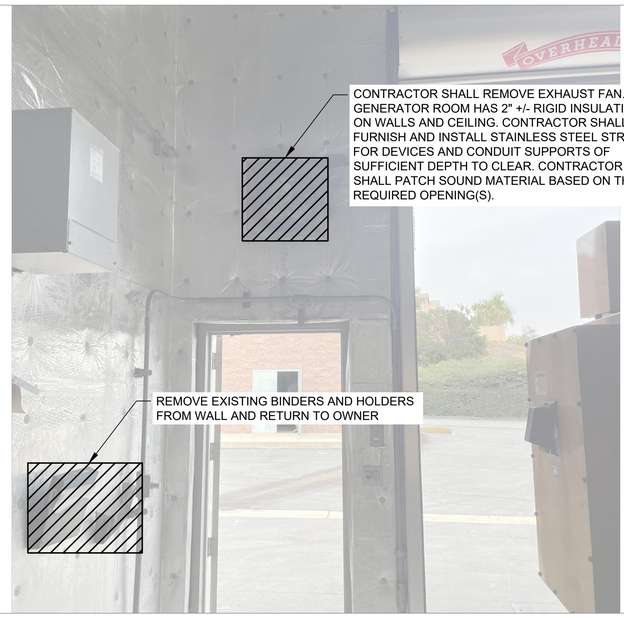

CONTRACTOR SHALL REMOVE EXHAUST FAN. GENERATOR ROOM HAS 2" +/- RIGID INSULATION ON WALLS AND CEILING. CONTRACTOR SHALL FURNISH AND INSTALL STAINLESS STEEL STRUT FOR DEVICES AND CONDUIT SUPPORTS OF SUFFICIENT DEPTH TO CLEAR. CONTRACTOR SHALL PATCH SOUND MATERIAL BASED ON THE REQUIRED OPENING(S).

REMOVE EXISTING BINDERS AND HOLDERS FROM WALL AND RETURN TO OWNER

4 E-8 EXHAUST FAN DEMOLITION

NEW 600A MTS IN NEMA 4X, 316SS ENCLOSURE

NEW 400A GENERATOR RECEPTACLE

EQUIPMENT PAD, SEE STRUCTURAL DETAIL S-3342 ON SHEET S-2 FOR FURTHER DETAIL

5 E-8 HOSE RACK DEMOLITION AND MTS INSTALLATION

FINAL SUBMITTAL
(FOR CONSTRUCTION)

REGISTERED PROFESSIONAL ENGINEER
JEFFREY R. MOORE
No. E18977
Exp. 12/31/23
STATE OF CALIFORNIA
11/22/2023

Kennedy Jenks
9325 SKY PARK COURT, SUITE 300
SAN DIEGO, CA 92123
858-676-7500

SUBMITTED: TIMOTHY WATERS 11/22/2023
PROJECT MANAGER DATE

DATE	INITIAL	REVISION DESCRIPTION	DATE	INITIAL	DATE	INITIAL
ENGINEER OF WORK			OTHER APPROVAL		ACCEPTED	

E-4

SHEET 14 | CITY OF CARLSBAD UTILITIES DEPARTMENT | SHEETS 25

IMPROVEMENT PLAN FOR:
ELECTRICAL DEMOLITION DETAILS
POINSETTIA LIFT STATION GENERATOR REPLACEMENT

ACCEPTED BY: DAVE PADILLA
Dave Padilla 12/19/2023
ENGINEERING MANAGER DATE

DWN BY: DPH
CHKD BY: JRM
RVWD BY:

PROJECT NO. 3840-23
DRAWING NO. 540-9

DocuSign Envelope ID: 22E0CD66-5F4E-491C-A1CF-7BC34D603F05

Plot Date: 11/27/2023 3:50 PM
User: ERICK ALMALEL

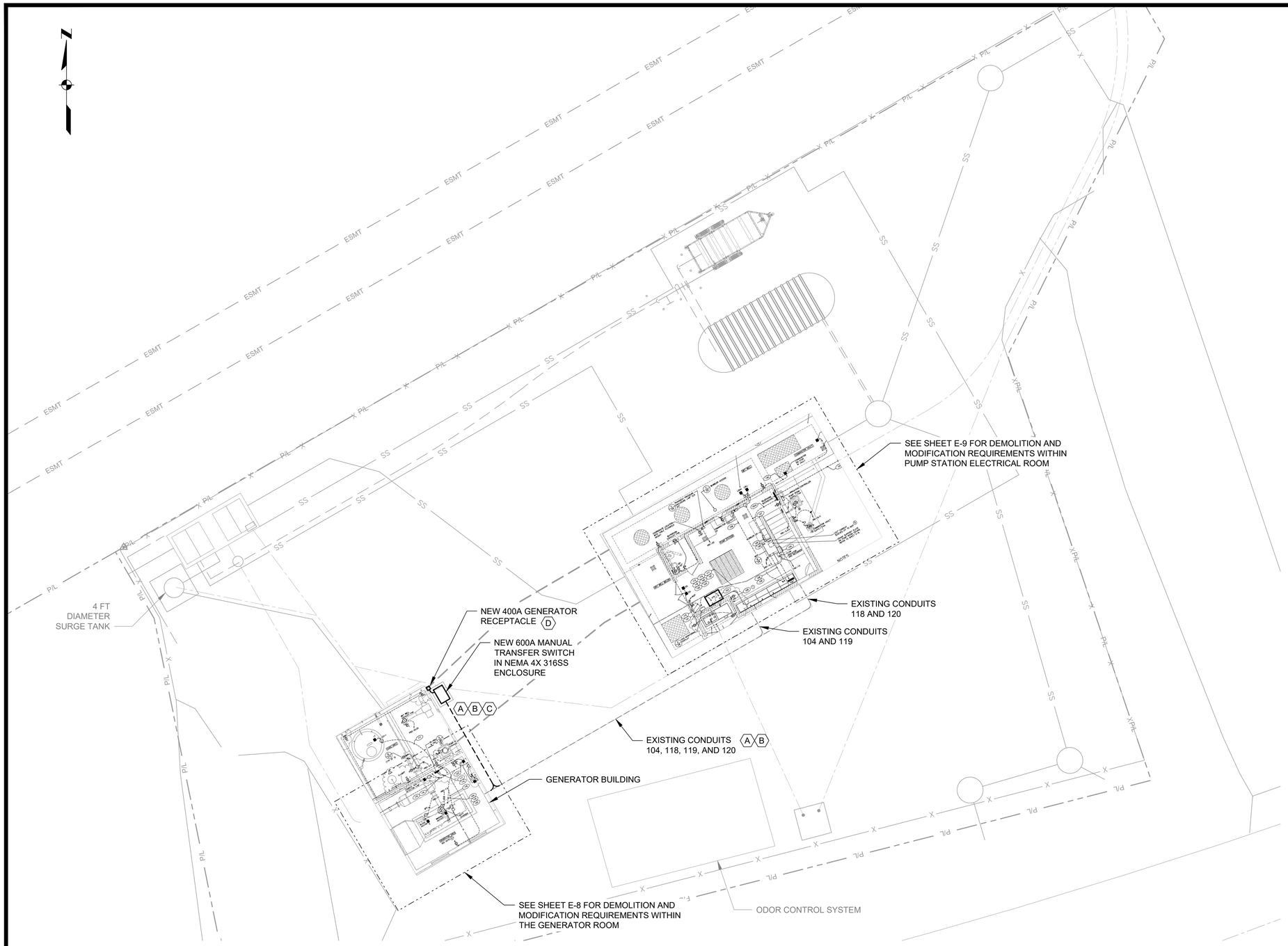

ELECTRICAL SITE PLAN

SCALE: 1" = 10'

SHEET KEYNOTES

A. CONTRACTOR SHALL POTHOLE EXISTING DUCTBANK AND LOCATE EXISTING CONDUITS 104 (2 - 3" CONDUITS EACH WITH 3#350MCM AND 1#1GND). ONCE DUCTBANK HAS BEEN IDENTIFIED, CONTRACTOR SHALL FURNISH AND INSTALL NEW MANUAL TRANSFER SWITCH (MTS) AT APPROXIMATE LOCATION SHOWN.

B. CONTRACTOR SHALL DISCONNECT AND REMOVE CABLES IN CONDUITS 104 AND INTERCEPT AND RE-ROUTE EXISTING CONDUITS 104 TO NEW MANUAL TRANSFER SWITCH. CONTRACTOR SHALL ROUTE CONDUIT 104A (2-3" CONDUITS) FROM NEW MTS TO EXISTING DUCTBANK AND TIE BACK IN TO THE EXISTING POWER CONDUIT 104 (2-3" CONDUITS). CONDUIT 104A WILL BE THE CONDUIT TAG FOR THE RACEWAYS SYTEM BETWEEN MTS AND GENERATOR. AFTER CONDUITS ARE RE-ROUTED AND SUCCESSFULLY MANDRELED, CONTRACTOR SHALL FURNISH, INSTALL AND CONNECT 2 SETS OF 3#350MCM & 1#1GND BETWEEN THE EXISTING ATS AND NEW MTS. CONTRACTOR SHALL PROVIDE SUFFICIENT SLACK IN CONDUCTORS AT THE EXISTING ATS TO TERMINATE TO NEW ATS ONCE ITS REPLACED. WIRE COMPLETE IN ACCORDANCE WITH NEC AND LOCAL CODES.

C. CONTRACTOR SHALL FURNISH AND INSTALL A TEMPORARY 250KW GENERATOR FOR STANDBY POWER REQUIREMENTS WHILE THE PERMANENT GENERATOR IS DISCONNECTED AND BEING REPLACED. CONTRACTOR SHALL UTILIZE THE CONNECTIONS AT THE MTS TO CONNECT THE TEMPORARY GENERATOR. CONTRACTOR SHALL COORDINATE WITH APCD TO OBTAIN THE NECESSARY PERMITS FOR THE TEMPORARY GENERATOR.

D. CONTRACTOR SHALL FURNISH, INSTALL, AND CONNECT NEW CONDUIT 104B BETWEEN THE NEW MTS AND THE NEW GENERATOR RECEPTACLE. CONDUIT 104B SHALL BE 4" WITH A WIRE FILL OF 3#500MCM & 1#1GND. WIRE COMPLETE IN ACCORDANCE WITH THE NEC AND LOCAL CODES.

E-5

REGISTERED PROFESSIONAL ENGINEER
JEFFREY R. MARK
No. E18977
Exp. 12/31/23
STATE OF CALIFORNIA
11/22/2023

Kennedy Jenks
9325 SKY PARK COURT, SUITE 300
SAN DIEGO, CA 92123
858-676-7500

SUBMITTED: TIMOTHY WATERS 11/22/2023
PROJECT MANAGER DATE

DATE	INITIAL	REVISION DESCRIPTION	DATE	INITIAL	DATE	INITIAL
ENGINEER OF WORK			OTHER APPROVAL		ACCEPTED	

SHEET 15 | CITY OF CARLSBAD UTILITIES DEPARTMENT | SHEETS 25

IMPROVEMENT PLAN FOR:
ELECTRICAL SITE PLAN
POINSETTIA LIFT STATION GENERATOR REPLACEMENT

ACCEPTED BY: DAVE PADILLA
Dave Padilla 12/19/2023
ENGINEERING MANAGER DATE

DWN BY: DPH
CHKD BY: JRM
RVWD BY:

PROJECT NO. 3840-23
DRAWING NO. 540-9

FINAL SUBMITTAL
(FOR CONSTRUCTION)

DocuSign Envelope ID: 22E0CD66-5F4E-491C-A1CF-7BC34D603F05

Plot Date: 11/27/2023 3:50 PM

User: ERICK ALMALEL

SHEET KEYNOTES

A. CONTRACTOR SHALL DEMOLISH EXISTING ATS AND GENERATOR. CONTRACTOR SHALL DISCONNECT AND REMOVE EXISTING CONDUCTORS IN CONDUITS 103, 104, AND 105. EACH CONDUIT IS 2-3" EACH WITH 3#350MCM & 1#1GND.

B. CONTRACTOR SHALL DISCONNECT AND REMOVE CABLES IN CONDUITS 104 AND INTERCEPT AND RE-ROUTE EXISTING CONDUITS 104 TO NEW MANUAL TRANSFER SWITCH. CONTRACTOR SHALL ROUTE CONDUIT 104A (2-3" CONDUITS) FROM NEW MTS TO EXISTING DUCTBANK AND TIE BACK IN TO THE EXISTING POWER CONDUIT 104 (2-3" CONDUITS). CONDUIT 104A WILL BE THE CONDUIT TAG FOR THE RACEWAYS SYTEM BETWEEN MTS AND GENERATOR. AFTER CONDUITS ARE RE-ROUTED AND SUCCESSFULLY MANDRELED, CONTRACTOR SHALL FURNISH, INSTALL AND CONNECT 2 SETS OF 3#350MCM & 1#1GND BETWEEN THE EXISTING ATS AND NEW MTS. CONTRACTOR SHALL PROVIDE SUFFICIENT SLACK IN CONDUCTORS AT THE EXISTING ATS TO TERMINATE TO NEW ATS ONCE ITS REPLACED. WIRE COMPLETE IN ACCORDANCE WITH NEC AND LOCAL CODES.

C. DURING CONSTRUCTION, THE CONTRACTOR SHALL FURNISH, INSTALL AND CONNECT A 250KW TEMPORARY GENERATOR TO THE MTS AND PROVIDE A BACKUP POWER SOURCE WHILE THE EXISTING GENERATOR IS BEING REPLACED. CONTRACTOR SHALL COORDINATE ALL PERMITTING AND PAY ALL ASSOCIATED FEES TO BRING A TEMPORARY SOURCE OF POWER TO THE SITE.

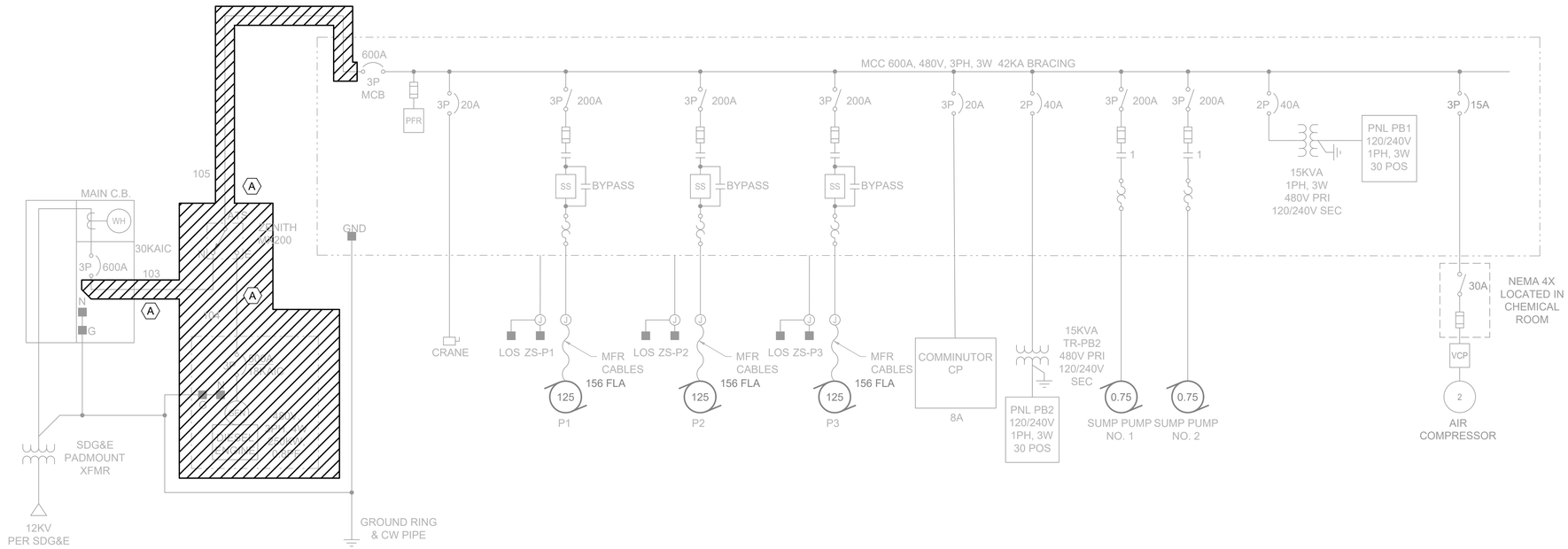

SINGLE LINE DIAGRAM - DEMOLITION

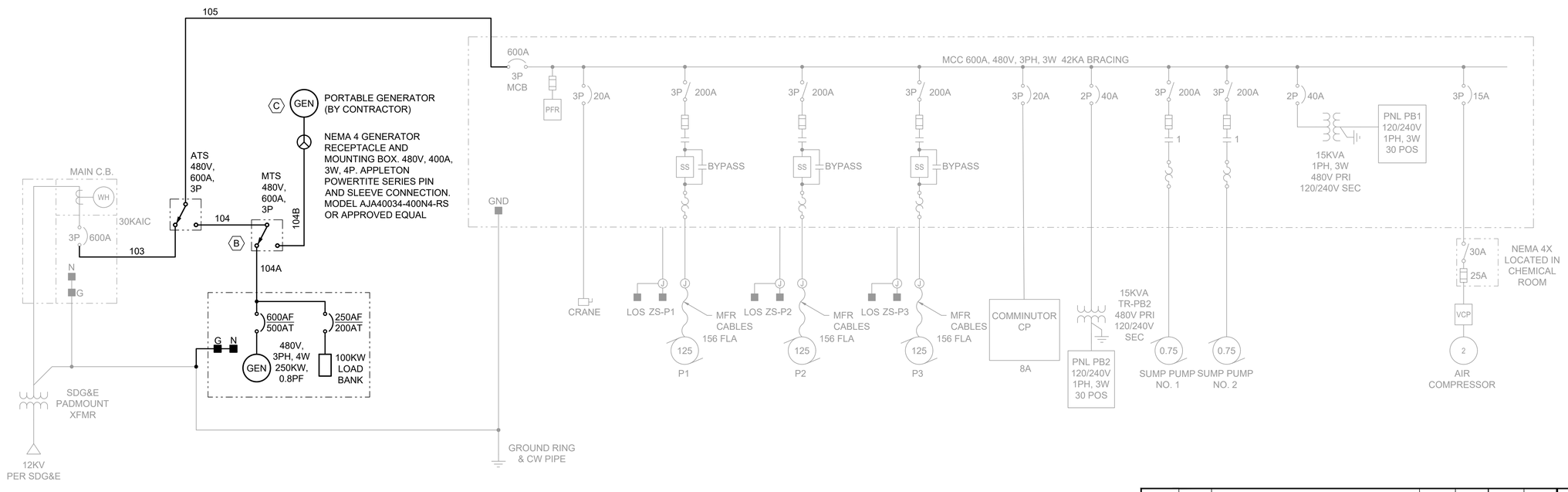

SINGLE LINE DIAGRAM - REVISED

E-6

FINAL SUBMITTAL
(FOR CONSTRUCTION)

REGISTERED PROFESSIONAL ENGINEER
JEFFREY R. HOPE
No. E18977
Exp. 12/31/23
STATE OF CALIFORNIA
11/22/2023

Kennedy Jenks
9325 SKY PARK COURT, SUITE 300
SAN DIEGO, CA 92123
858-676-7500

SUBMITTED: TIMOTHY WATERS 11/22/2023
PROJECT MANAGER DATE

DATE	INITIAL	REVISION DESCRIPTION	DATE	INITIAL	DATE	INITIAL
ENGINEER OF WORK			OTHER APPROVAL		ACCEPTED	

SHEET 16 | CITY OF CARLSBAD UTILITIES DEPARTMENT | SHEETS 25

IMPROVEMENT PLAN FOR:
SINGLE LINE DIAGRAM -
DEMO AND REVISED
POINSETTIA LIFT STATION GENERATOR REPLACEMENT

ACCEPTED BY: DAVE PADILLA
Dave Padilla 12/19/2023
ENGINEERING MANAGER DATE

DWN BY: DPH
CHKD BY: JRM
RVWD BY: -

PROJECT NO. 3840-23
DRAWING NO. 540-9

DocuSign Envelope ID: 22E0CD66-5F4E-491C-A1CF-7BC34D603F05

Plot Date: 11/27/2023 3:50 PM

User: ERICK ALMALEL

PANEL PB-2					FED FROM: MCC				
240	/120 VOLTS, SINGLE PHASE, 3 WIRE	BUS: 125A		AIC: 10KA		MAIN: 100A/2P	MOUNTING: INSIDE MCC		
CKT. NO.	DESCRIPTION	CONNECTED KVA		TRIP AMPS/ POLES	CKT. NO.	DESCRIPTION	CONNECTED KVA		TRIP AMPS/ POLES
		A	B				A	B	
1	PUMP ROOM EXHAUST FAN	1.13		20/1	2	CHEM FDR	0.70		20/1
3	SPARE		0.00	20/1	4	CHEM FDR		0.70	20/1
5	GENERATOR EXHAUST FAN	0.05		20/1	6	SPARE	0.00		20/1
7	GENERATOR HEATER		2.50	30/1	8	GENERATOR ROOM RECEPT		0.36	20/1
9	GENERATOR WATER HEATER	0.20		20/1	10	OUTSIDE RECEPT	0.72		20/1
11	BATTERY CHARGER		0.30	20/1	12	GENERATOR ROOM LIGHTS		0.42	20/1
13	METER VAULT	0.60		20/1	14	OUTSIDE LIGHTS	0.20		20/1
15	DRY WELL EXHAUST FAN		0.50	20/2	16	CHEM AREA LIGHTS		0.42	20/1
17		0.00			18	EM LIGHTS	0.05		20/1
19	SPARE		0.00	20/2	20	CHEM ROOM EXHAUST FAN		1.00	20/1
21		0.50			22	SPARE			20/1
23	SPACE				24	SPARE			20/1
25	SPACE				26	SPARE			20/1
27	SPACE				28	SPARE			20/1
29	SPACE				30	SPARE			20/1
PHASE SUBTOTALS (KVA):		2.48	3.30				1.7	2.9	
PHASE TOTALS (KVA):							4.1	6.2	
TOTAL KVA:								10.3	KVA
TOTAL AMPERES:								43	A

FINAL SUBMITTAL
(FOR CONSTRUCTION)

REGISTERED PROFESSIONAL ENGINEER
JEFFREY R. JENKINS
No. E18977
Exp. 12/31/23
STATE OF CALIFORNIA
11/22/2023

Kennedy Jenks
9325 SKY PARK COURT, SUITE 300
SAN DIEGO, CA 92123
858-676-7500

SUBMITTED: TIMOTHY WATERS 11/22/2023
PROJECT MANAGER DATE

DATE	INITIAL	REVISION DESCRIPTION	DATE	INITIAL	DATE	INITIAL
ENGINEER OF WORK			OTHER APPROVAL		ACCEPTED	

E-7

SHEET 17 | CITY OF CARLSBAD UTILITIES DEPARTMENT | SHEETS 25

IMPROVEMENT PLAN FOR:
PANELBOARD SCHEDULE
POINSETTIA LIFT STATION GENERATOR REPLACEMENT

ACCEPTED BY: DAVE PADILLA
Dave Padilla 12/19/2023
ENGINEERING MANAGER DATE

DWN BY: DPH
CHKD BY: JRM
RVWD BY:

PROJECT NO. 3840-23

DRAWING NO. 540-9

DocuSign Envelope ID: 22E0CD66-5F4E-491C-A1CF-7BC34D603F05

Plot Date: 11/27/2023 3:50 PM
User: ERICK ALMALEL

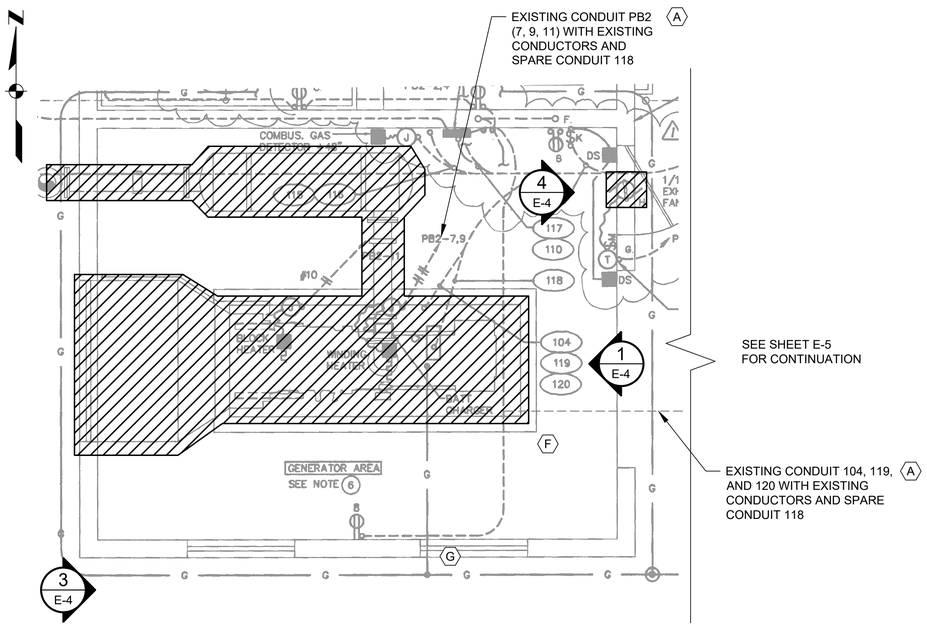

GENERATOR BUILDING DEMOLITION PLAN
SCALE: 3/8" = 1'

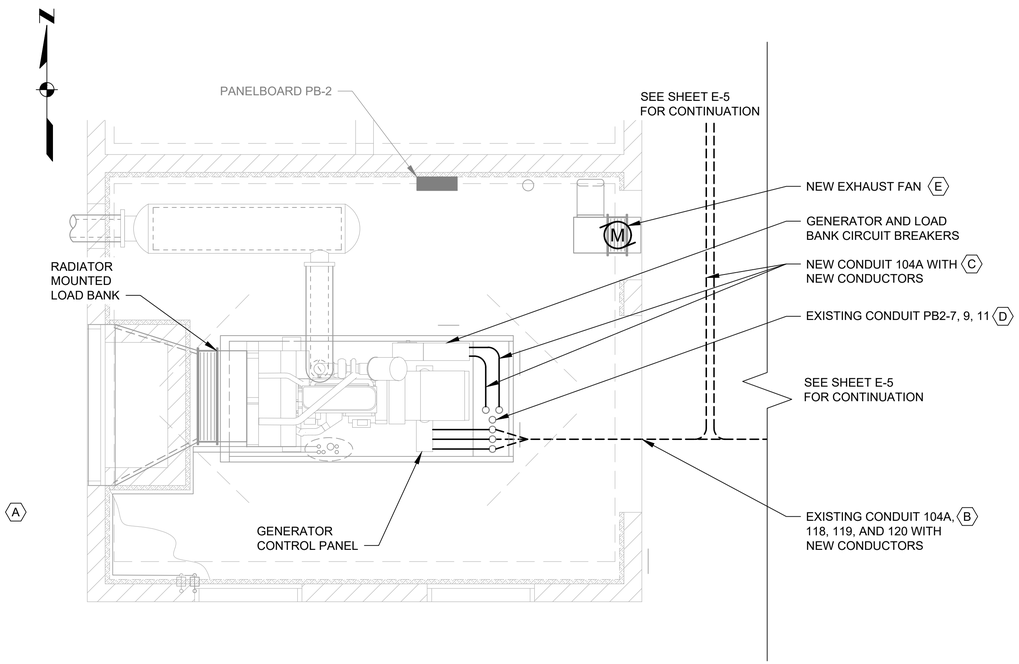

GENERATOR BUILDING MODIFIED PLAN
SCALE: 3/8" = 1'

GENERAL SHEET NOTES

1. GENERATOR ROOM HAS 2+ INCHES OF RIGID INSULATION ON WALLS AND CEILING. PROVIDE STRUT FOR DEVICES AND CONDUITS SUPPORTS OF SUFFICIENT DEPTH TO CLEAR.

SHEET KEYNOTES

A. CONTRACTOR SHALL DISCONNECT AND REMOVE EXISTING CABLES IN CONDUITS 119 (4#14 & 1#14GND BETWEEN ATS AND GENERATOR CONTROL PANEL), 120 (14#14 & 1#14GND BETWEEN MCP AND GENERATOR CONTROL PANEL) AND PB2(7,9,11) (BETWEEN PANELBOARD PB-2 AND GENERATOR AUXILIARY COMPONENTS). CONTRACTOR SHALL PROTECT IN PLACE THE EXISTING CONDUITS TO BE UTILIZED WITH NEW GENERATOR. SEE SHEET E-9 FOR LOCATION OF EXISTING MCP AND ATS.

B. CONTRACTOR SHALL FURNISH, INSTALL AND CONNECT NEW CONDUCTORS IN CONDUITS 118 (CAT6 ETHERNET CABLE BETWEEN GENERATOR CONTROL PANEL AND MCP), 119 (4#14 & 1#14GND BETWEEN NEW ATS AND NEW GENERATOR CONTROL PANEL), 120 (14#14 & 1#14GND BETWEEN MCP AND NEW GENERATOR CONTROL PANEL) AND PB2(7,9,11) BETWEEN PANELBOARD PB-2 AND GENERATOR AUXILIARY COMPONENTS (JACKET HEATER, BATTERY CHARGER AND WINDING HEATER). SEE SHEET E-9 FOR LOCATION OF MCP AND NEW ATS.

C. CONTRACTOR SHALL INTERCEPT EXISTING DUCTBANK AND ROUTE CONDUIT 104A (2-3" CONDUITS EACH WITH A WIRE FILL OF 3#350MCM AND 1#1 GND) BETWEEN THE NEW MTS AND THE NEW GENERATOR. CONTRACTOR SHALL WIRE COMPLETE IN ACCORDANCE WITH THE NEC AND LOCAL CODES.

D. CONTRACTOR SHALL EXTEND EXISTING CONDUIT STUBUP PB2-7,9,11 TO GENERATOR HEATERS AND BATTERY CHARGER. CONTRACTOR SHALL ROUTE NEW CONDUCTORS (2#10, 4#12 AND 1#10 GND) TO GENERATOR ANCILLARY DEVICES. WIRE COMPLETE IN ACCORDANCE WITH THE NEC AND LOCAL CODES.

E. CONTRACTOR SHALL MODIFY EXISTING CONDUIT PB-2-5 TO NEW EXHAUST FAN LOCATION IF NECESSARY. CONTRACTOR SHALL PULL NEW CONDUCTORS (2#12 & 1#12 GND) FROM EXISTING PANELBOARD PB2 TO NEW EXHAUST FAN LOCATION. WIRE COMPLETE IN ACCORDANCE WITH THE NEC AND LOCAL CODES.

F. CONTRACTOR SHALL PROTECT EXISTING GENERATOR PAD IN PLACE DURING REPLACEMENT OF EXISTING GENERATOR SET.

G. CONTRACTOR SHALL PROTECT IN PLACE THE EXISTING GROUND RING AROUND THE GENERATOR BUILDING WHILE TRENCHING CONDUIT TO AND FROM THE MANUAL TRANSFER SWITCH.

FINAL SUBMITTAL
(FOR CONSTRUCTION)

REGISTERED PROFESSIONAL ENGINEER
JEFFREY R. JENKS
No. E18977
Exp. 12/31/23
STATE OF CALIFORNIA
11/22/2023

Kennedy Jenks
9325 SKY PARK COURT, SUITE 300
SAN DIEGO, CA 92123
858-676-7500

SUBMITTED: TIMOTHY WATERS 11/22/2023
PROJECT MANAGER DATE

DATE	INITIAL	REVISION DESCRIPTION	DATE	INITIAL	DATE	INITIAL
ENGINEER OF WORK			OTHER APPROVAL		ACCEPTED	

E-8

SHEET 18 | CITY OF CARLSBAD UTILITIES DEPARTMENT | SHEETS 25

IMPROVEMENT PLAN FOR:
GENERATOR BUILDING DEMOLITION AND MODIFIED PLANS
POINSETTIA LIFT STATION GENERATOR REPLACEMENT

ACCEPTED BY: *DAVE PADILLA* 12/19/2023
ENGINEERING MANAGER DATE

DWN BY: DPH
CHKD BY: JRM
RVWD BY: .

PROJECT NO. 3840-23
DRAWING NO. 540-9

DocuSign Envelope ID: 22E0CD66-5F4E-491C-A1CF-7BC34D603F05

Plot Date: 11/27/2023 3:50 PM
User: ERICK ALMALEL

GENERAL SHEET NOTES

1. CONTRACTOR SHALL SUCCESSFULLY MANDREL ALL EXISTING CONDUITS PRIOR TO INSTALLATION OF NEW CONDUCTORS.

SHEET KEYNOTES

A. CONTRACTOR SHALL DISCONNECT AND REMOVE POWER CONDUCTORS IN CONDUITS 103 (2-3" CONDUITS EACH WITH 3#350MCM & 1#1GND) AND 105 (2-3" CONDUIT EACH WITH 3#350MCM & 1#1GND). CONTRACTOR SHALL DISCONNECT NEWLY INSTALLED POWER CONDUCTORS IN CONDUIT 104 (2-3"C EACH WITH 3#350MCM & 1#1 GND). CONTRACTOR SHALL DISCONNECT AND REMOVE CONTROL CONDUCTORS IN CONDUIT 122 (3/4" WITH 4#14 & 1#14GND). CONTRACTOR SHALL REMOVE EXISTING ATS AND REPLACE WITH NEW ATS AT THE SAME LOCATION.

B. ONCE THE NEW ATS IS SECURED TO EQUIPMENT PAD, CONTRACTOR SHALL FURNISH, INSTALL AND CONNECT NEW CONDUCTORS (2 SETS OF 3#350MCM & 1#1 GND) IN EXISTING CONDUITS 103 AND 105, NEW CONDUCTORS (4#14 & 1#14GND) IN EXISTING CONDUIT 122 AND RECONNECT EXISTING NEWLY INSTALLED CONDUCTORS (2 SETS OF 3#350MCM & 1#1 GND) IN CONDUIT 104 TO THE ATS. WIRE COMPLETE IN ACCORDANCE WITH THE NEC AND LOCAL CODES.

C. CONTRACTOR SHALL FURNISH, INSTALL AND CONNECT NEW CONDUCTORS IN CONDUITS 118 (CAT6 ETHERNET CABLE BETWEEN GENERATOR CONTROL PANEL AND MCP), 119 (4#14 & 1#14GND BETWEEN NEW ATS AND NEW GENERATOR CONTROL PANEL), 120 (14#14 & 1#14GND BETWEEN MCP AND NEW GENERATOR CONTROL PANEL) AND PB2(7,9,11) BETWEEN PANELBOARD PB-2 AND GENERATOR AUXILIARY COMPONENTS (JACKET HEATER, BATTERY CHARGER AND WINDING HEATER). SEE SHEET E-9 FOR LOCATION OF MCP AND NEW ATS.

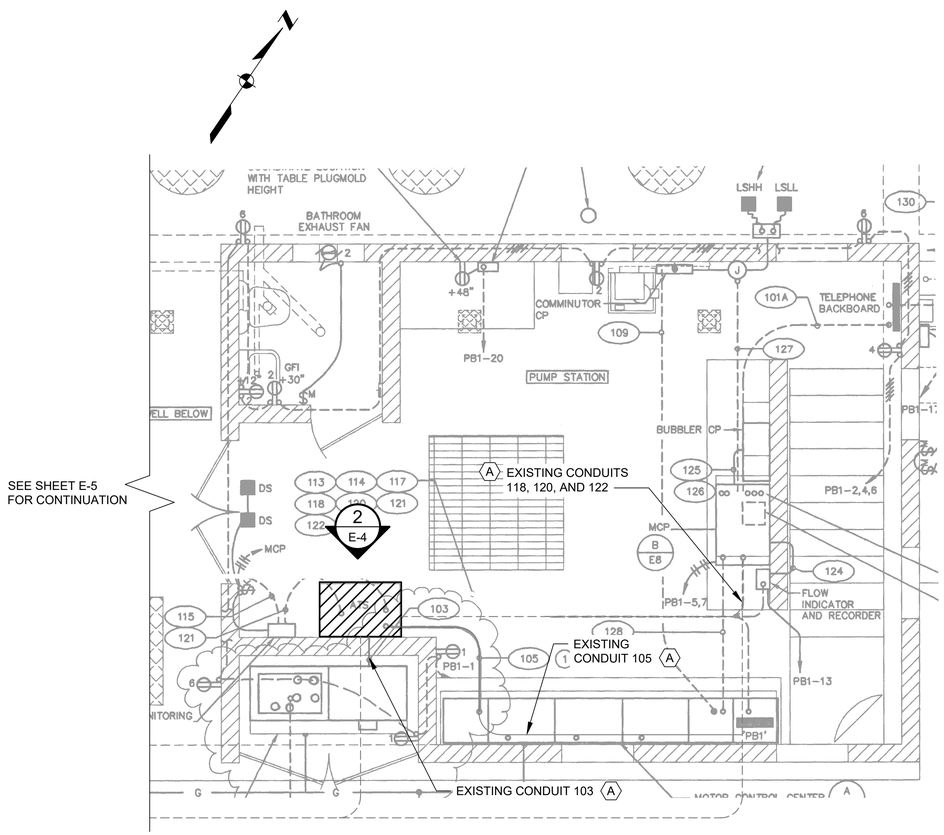

ELECTRICAL ROOM DEMOLITION PLAN
SCALE: 3/8" = 1'

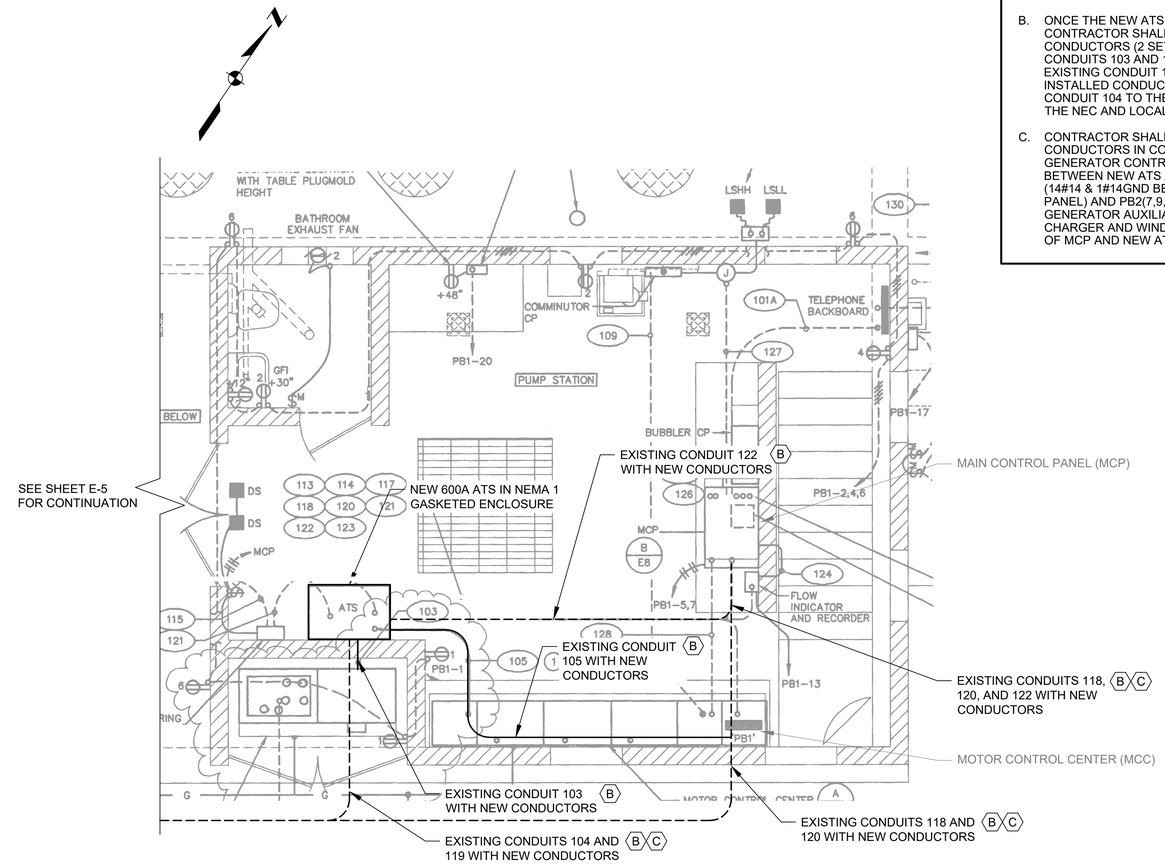

ELECTRICAL ROOM MODIFIED PLAN
SCALE: 3/8" = 1'

FINAL SUBMITTAL
(FOR CONSTRUCTION)

REGISTERED PROFESSIONAL ENGINEER
JEFFREY R. JONES
No. E18977
Exp. 12/31/23
STATE OF CALIFORNIA
11/22/2023

Kennedy Jenks
9325 SKY PARK COURT, SUITE 300
SAN DIEGO, CA 92123
858-676-7500

SUBMITTED: TIMOTHY WATERS 11/22/2023
PROJECT MANAGER DATE

DATE	INITIAL	REVISION DESCRIPTION	DATE	INITIAL	DATE	INITIAL
ENGINEER OF WORK			OTHER APPROVAL		ACCEPTED	

E-9

SHEET 19 | CITY OF CARLSBAD UTILITIES DEPARTMENT | SHEETS 25

IMPROVEMENT PLAN FOR:
ELECTRICAL ROOM DEMOLITION AND MODIFIED PLANS
POINSETTIA LIFT STATION GENERATOR REPLACEMENT

ACCEPTED BY: DAVE PADILLA
Dave Padilla 12/19/2023
ENGINEERING MANAGER DATE

DWN BY: DPH
CHKD BY: JRM
RVWD BY:

PROJECT NO. 3840-23
DRAWING NO. 540-9

DocuSign Envelope ID: 22E0CD66-5F4E-491C-A1CF-7BC34D603F05

Plot Date: 11/27/2023 3:51 PM

User: ERICK ALMALEL

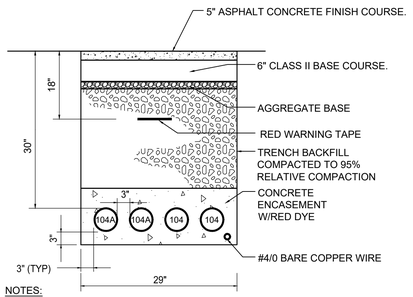

NOTES:

1. CONTRACTOR SHALL INSTALL AC SURFACE COURSE, AC BASE COURSE AND AGGREGATE BASE ROCK IN ACCORDANCE WITH CITY STANDARD DRAWINGS GS-24 THROUGH GS-28.

1 - TYPICAL UNREINFORCED DUCT BANK

SCALE: NTS

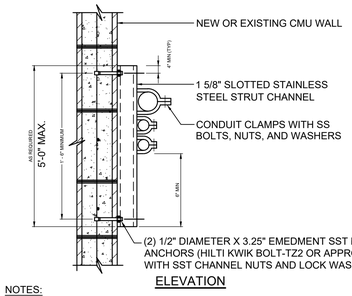

ELEVATION

NOTES:

1. THIS DETAIL TYPICAL FOR NEW OR EXISTING CMU WALLS.
2. PREFORMED CHANNEL, FITTINGS AND CLAMPS SHALL BE STAINLESS STEEL.
3. CHANNELS TO BE SPACED AT 5'-0" OC MAXIMUM.
4. SUPPORT NOT TO EXCEED 15PLF COMBINED WEIGHT OF CONDUIT SYSTEM.

2 - CONDUIT SUPPORT DETAIL

SCALE: NTS

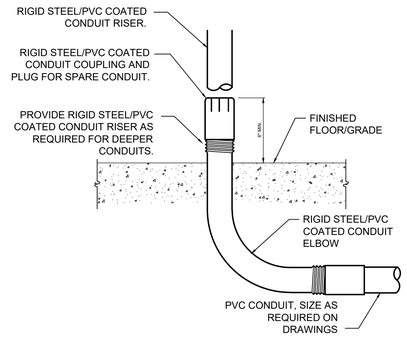

3 - PVC CONDUIT STUB-UP

SCALE: NTS

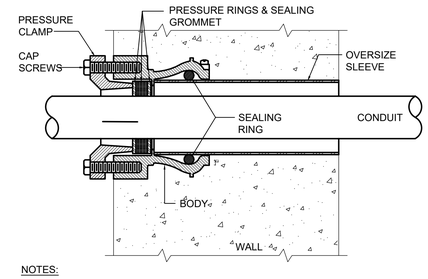

NOTES:

PROVIDE CONDUIT SEAL IN WALL AND FLOOR WHERE PENETRATION ARE BELOW GRADE OR GROUND WATER LEVEL AND ENTERING INTO WATER CONTAINMENT RESERVOIR.
MFR: O-Z/GEDNEY, TYPE FSK

4 - CONDUIT SEAL

SCALE: NTS

FINAL SUBMITTAL
(FOR CONSTRUCTION)

REGISTERED PROFESSIONAL ENGINEER
JEFFREY R. JENKINS
No. E18977
Exp. 12/31/23
STATE OF CALIFORNIA
11/22/2023

Kennedy Jenks
9325 SKY PARK COURT, SUITE 300
SAN DIEGO, CA 92123
858-676-7500

SUBMITTED: TIMOTHY WATERS 11/22/2023
PROJECT MANAGER DATE

DATE	INITIAL	REVISION DESCRIPTION	DATE	INITIAL	DATE	INITIAL
ENGINEER OF WORK			OTHER APPROVAL		ACCEPTED	

E-10

SHEET 20 | CITY OF CARLSBAD UTILITIES DEPARTMENT | SHEETS 25

IMPROVEMENT PLAN FOR:
STANDARD ELECTRICAL DETAILS
POINSETTIA LIFT STATION GENERATOR REPLACEMENT

ACCEPTED BY: DAVE PADILLA
Dave Padilla 12/19/2023
ENGINEERING MANAGER DATE

DWN BY: DPH
CHKD BY: JRM
RVWD BY:

PROJECT NO. 3840-23

DRAWING NO. 540-9

DocuSign Envelope ID: 22E0CD66-5F4E-491C-A1CF-7BC34D603F05

Plot Date: 11/27/2023 4:00 PM
User: ERICK ALMALEL

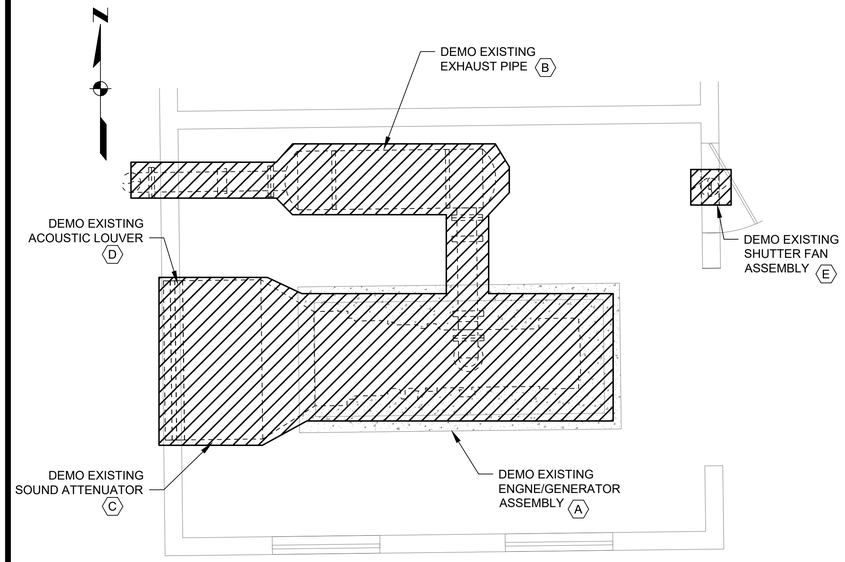

GENERATOR BUILDING DEMOLITION PLAN

SCALE: 3/8" = 1'

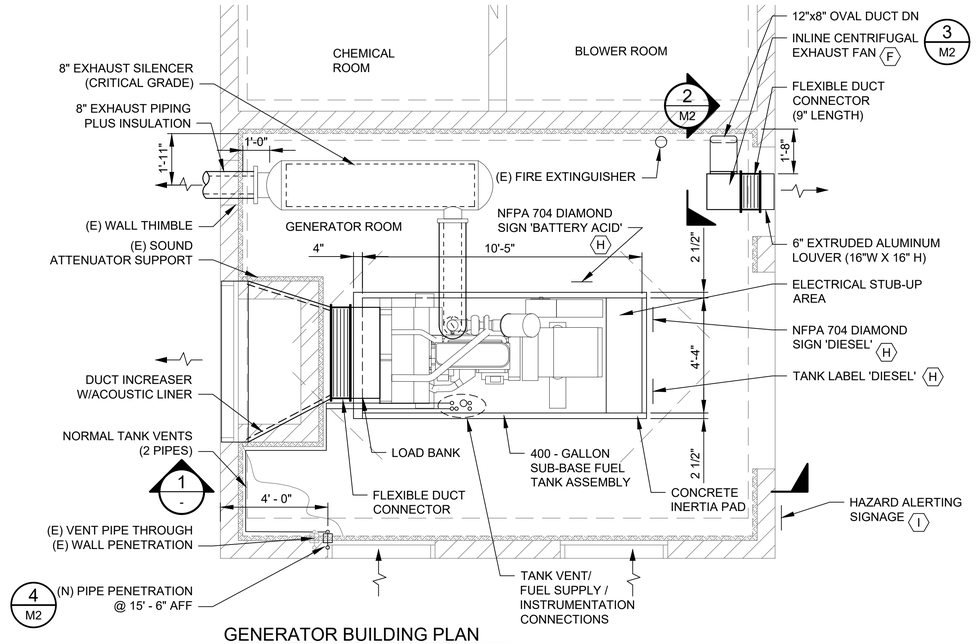

GENERATOR BUILDING PLAN

SCALE: 3/8" = 1'

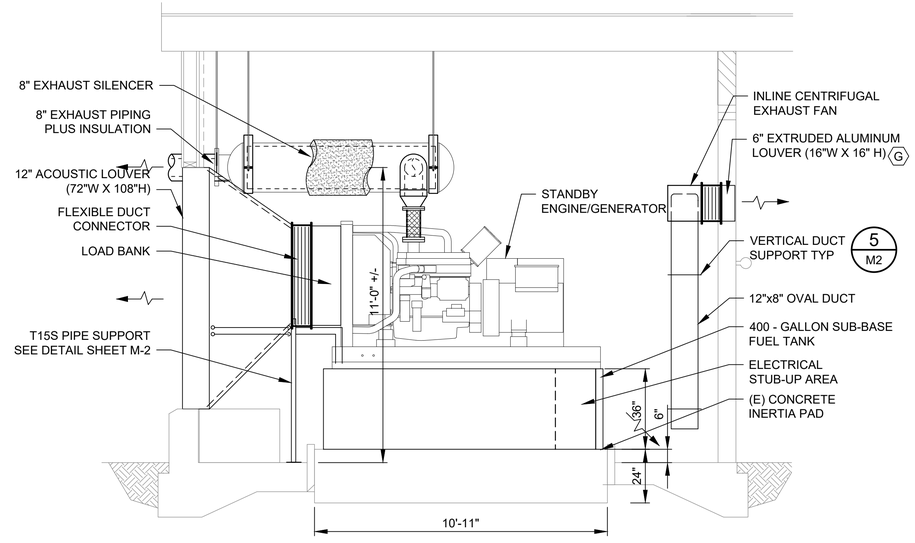

GENERATOR BUILDING SECTION

SCALE: 3/8" = 1'

GENERAL SHEET NOTES

1. CONSTRUCTION AND DEMOLITION OPERATIONS SHALL INCORPORATE SALVAGE AND/OR RECYCLING OF MATERIALS IN ACCORDANCE WITH THE CALIFORNIA GREEN BUILDING STANDARDS CODE, AS ADOPTED BY THE CITY OF CARLSBAD.
2. POLLUTION CONTROL LIMITS FOR THE SELECTION OF FINISH MATERIALS SHALL BE IN ACCORDANCE WITH THE CALIFORNIA GREEN BUILDING STANDARDS CODE, AS ADOPTED BY THE CITY OF CARLSBAD.

SHEET KEYNOTES

A. SALVAGE ENGINE/GENERATOR AND SUB-BASE FUEL TANK DURING REMOVAL FROM BUILDING. SHEAR FUEL TANK ANCHORAGE BOLTS LEVEL WITH CONCRETE INERTIA PAD.

B. DEMOLISH EXHAUST SILENCER AND EXHAUST PIPING UPSTREAM OF EXHAUST SILENCER. REMOVE EXHAUST PIPING DOWNSTREAM OF SILENCER TO A POINT 24 INCHES FROM INTERIOR WALL. DEMOLISH EXHAUST PIPE INSULATION SYSTEM. DEMOLISH PIPE HANGERS. RETAIN UPPER ATTACHMENT OF HANGER SYSTEM TO STRUCTURE.

C. DEMOLISH EXISTING SOUND ATTENUATOR AND TRANSITION DUCTWORK TO ENGINE/GENERATOR ASSEMBLY. RETAIN CMU SOUND ATTENUATOR SUPPORT. PROVIDE PLYWOOD COVER (3/4" OSB) OVER SOUND ATTENUATOR SUPPORT OPENING.

D. DEMOLISH EXISTING LOUVER. PROVIDE TEMPORARY PLYWOOD COVER (3/4" OSB) OVER EXISTING WALL OPENING.

E. DEMOLISH EXISTING WALL EXHAUST FAN ASSEMBLY AND LOUVER. PROVIDE TEMPORARY PLYWOOD COVER (3/4" OSB) OVER EXISTING WALL OPENING. RETAIN EXISTING CONDUIT FOR NEW POWER SUPPLY WIRING TO REPLACEMENT FAN. (REFER TO ELECTRICAL DRAWINGS)

F. DESIGN POINT: 400 FM @ 0.15 INCH W.C.; LEFT DISCHARGE (SIDE OUTLET) CONFIGURATION; DIRECT DRIVE ASSEMBLY, 120 VAC, 1-PHASE, 60 HZ MOTOR. PROVIDE VERTICAL HANGING NEOPRENE ISOLATORS; CONTINUOUS OPERATION, PROVIDE MANUAL DIAL SPEED CONTROL ACCESSORY. GREENHECK SQ-90, OR EQUAL.

G. PROVIDE EXTRUDED ALUMINUM LOUVER, 6-INCH DEPTH, CHANNEL FRAME FOR MOUNTING IN EXISTING WALL OPENING.

H. MOUNT ADHESIVE SIGNS ON ENGINE-GENERATOR AND FUEL TANK ASSEMBLY AT DIRECTION OF EQUIPMENT SUPPLIER.

I. MOUNT "DANGER - COMBUSTIBLE LIQUIDS" AND "DANGER - NO SMOKING" SIGNS VERTICALLY ABOVE ONE ANOTHER IN LOCATION SHOWN. MOUNT ADDITIONAL HAZARD ALERTING SIGNAGE ON NORTH WALL OF BUILDING.

FINAL SUBMITTAL
(FOR CONSTRUCTION)

REGISTERED PROFESSIONAL ENGINEER
TIMOTHY B. WATERS
No. M28906
Exp. 6/30/24
MECHANICAL
STATE OF CALIFORNIA
11/22/2023

Kennedy Jenks
9325 SKY PARK COURT, SUITE 300
SAN DIEGO, CA 92123
858-676-7500

SUBMITTED: TIMOTHY WATERS 11/22/2023
PROJECT MANAGER DATE

DATE	INITIAL	REVISION DESCRIPTION	DATE	INITIAL	DATE	INITIAL
ENGINEER OF WORK			OTHER APPROVAL		ACCEPTED	

M-1

SHEET 21 | CITY OF CARLSBAD UTILITIES DEPARTMENT | SHEETS 25

IMPROVEMENT PLAN FOR:
GENERATOR BUILDING
DEMOLITION AND MODIFIED PLANS/ SECTION
POINSETTIA LIFT STATION GENERATOR REPLACEMENT

ACCEPTED BY: DAVE PADILLA
Dave Padilla 12/19/2023
ENGINEERING MANAGER DATE

DWN BY: RJ
CHKD BY: ZH
RVWD BY: -

PROJECT NO. 3840-23
DRAWING NO. 540-9

DocuSign Envelope ID: 22E0CD66-5F4E-491C-A1CF-7BC34D603F05

Plot Date: 11/27/2023 3:52 PM

User: ERICK ALMALEL

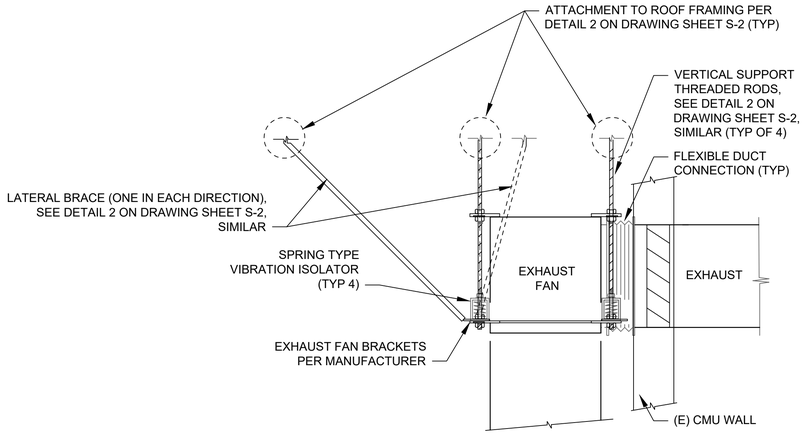

NOTES:
1. CAREFULLY REMOVE ALL EXISING CEILING INSUALTION AND REPLACE WITH NEW OR RE-USE EXISTING INSULATION PENDING CITY APPROVAL.
2. DO NOT DAMAGE OR CUT ANY EXISTING FRAMING OR BLOCKING.
3. ALIGN SUPPORTS TO EXISTING FRAMING OR BLOCKING. WHERE EXISING FRAMING IS OFFSET, INSTALL 2X8 BLOCKING (DOUGLASS-FIR #2) WITH SIMPSON A34 CLIPS AT EACH END (OR APPROVED EQUAL).
4. REFERENCE DETAIL 2 ON DRAWING SHEET S-2 FOR INFORMATION NOT SHOWN.

3 / - INLINE EXHAUST FAN
SCALE: 1/2" = 1'

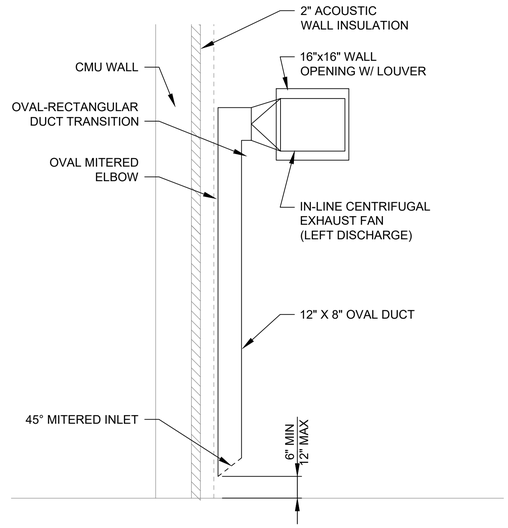

2 / - GENERATOR ROOM EXHAUST - SECTION
SCALE: 1/2" = 1'

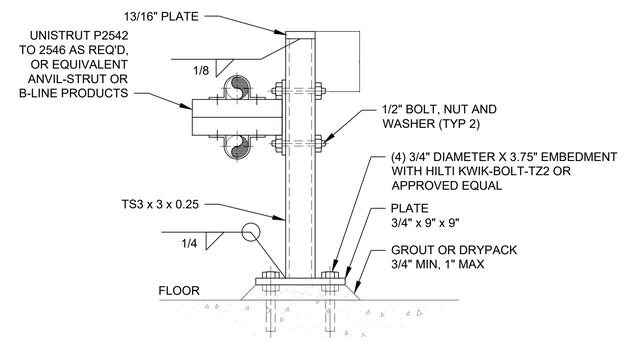

NOTES:
1. LOCATE AND AVOID ALL REINFORCEMENT PRIOR TO DRILLING INTO THE CONCRETE.
2. FOLLOW ICC ESR-4266 FOR INSTALLATION INSTRUCTIONS AND RECOMMENDATIONS.
3. ALTERNATE OR APPROVED EQUAL ANCHORS SHALL HAVE A CURRENT AND RELATIVE ICC-ESR OR IAPMO REPORT, AND SHALL BE SUBMITTED FOR REVIEW PRIOR TO USE.

1 / - T15S PIPE SUPPORT
N.T.S.

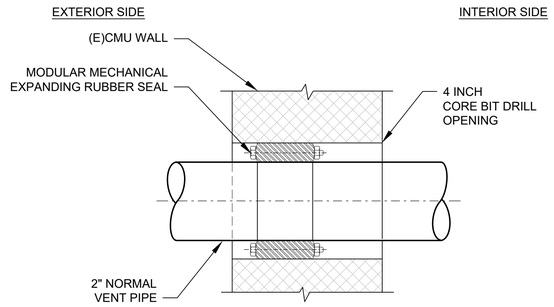

NOTE
1. OPENING DIMENSION AND MECHANICAL SEAL INSTALLATION SHALL BE PER MFR'S. RECOMMENDATION.

4 / - PIPE PENETRATION
N.T.S.

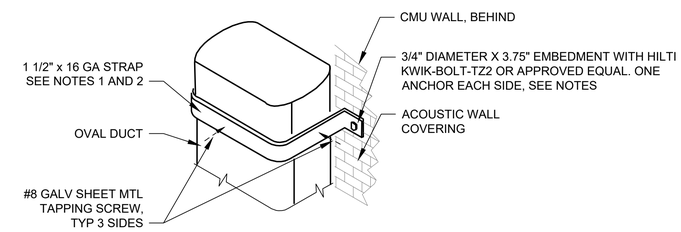

NOTES
1. SECURE DUCT AT 2 FEET AND AT 7 FEET FROM FLOOR.
2. LOCATE DUCTS TIGHT AGAINST ACOUSTIC WALL COVERING.
3. EACH WALL ANCHOR SHALL SATISFY THE FOLLOWING
4. LOCATE AND AVOID ALL REINFORCEMENT PRIOR TO DRILLING INTO THE MASONRY.
5. FOLLOW ICC ESR-4561 FOR INSTALLATION INSTRUCTIONS AND RECOMMENDATIONS.
6. ALTERNATE OR APPROVED EQUAL ANCHORS SHALL HAVE A CURRENT AND RELATIVE ICC-ESR OR IAPMO REPORT, AND SHALL BE SUBMITTED FOR REVIEW PRIOR TO USE.

5 / - VERTICAL DUCT SUPPORT
N.T.S.

FINAL SUBMITTAL
(FOR CONSTRUCTION)

REGISTERED PROFESSIONAL ENGINEER
ALEXANDER B. HOPKINS
No. M28906
Exp. 6/30/24
MECHANICAL
STATE OF CALIFORNIA
11/22/2023

Kennedy Jenks
9325 SKY PARK COURT, SUITE 300
SAN DIEGO, CA 92123
858-676-7500

SUBMITTED: TIMOTHY WATERS 11/22/2023
PROJECT MANAGER DATE

DATE	INITIAL	REVISION DESCRIPTION	DATE	INITIAL	DATE	INITIAL
ENGINEER OF WORK			OTHER APPROVAL		ACCEPTED	

M-2

SHEET 22 | CITY OF CARLSBAD UTILITIES DEPARTMENT | SHEETS 25

IMPROVEMENT PLAN FOR:
GENERATOR BUILDING MECHANICAL DETAILS
POINSETTIA LIFT STATION GENERATOR REPLACEMENT

ACCEPTED BY: DAVE PADILLA
Dave Padilla 12/19/2023
ENGINEERING MANAGER DATE

DWN BY: DPH
CHKD BY: JRM
RVWD BY:
PROJECT NO. 3840-23
DRAWING NO. 540-9

DocuSign Envelope ID: 22E0CD66-5F4E-491C-A1CF-7BC34D603F05

STRUCTURAL DESIGN CRITERIA

1. DESIGNED IN ACCORDANCE WITH THE 2022 CALIFORNIA BUILDING CODE, INCLUDING LATEST REVISIONS, AND ASCE 7-16, EXCEPT WHERE OTHER APPLICABLE CODE OR THE FOLLOWING NOTES ARE MORE RESTRICTIVE.
2. LIVE LOADS:
   ROOF, BUILDING (REDUCIBLE) — 20 PSF, 300 LBS POINT
3. WIND DESIGN DATA:

BASIC WIND SPEED, V_{ULT}	102 MPH
NOMINAL WIND SPEED, V_{ASD}	79 MPH
RISK CATEGORY	III
EXPOSURE	B
INTERNAL PRESSURE COEFFICIENT	+/- 0.18
COMPONENTS & CLADDING PRESSURE	NOT APPLICABLE (INTERIOR CONDITION)

4. SNOW DESIGN DATA: NOT APPLICABLE
5. SEISMIC DESIGN DATA:
   THE SEISMIC DESIGN PARAMETERS HAVE BEEN DEVELOPED IN ACCORDANCE WITH THE 2022 CALIFORNIA BUILDING CODE AND ASCE 7-16 INCLUDING SUPPLEMENT NO. 3, CONSIDERING EXCEPTION 2 OF SECTION 11.4.8 OF ASCE 7-16, WHERE A SITE-SPECIFIC GROUND MOTION PROCEDURE IS NOT REQUIRED.

RISK CATEGORY	III
SEISMIC IMPORTANCE FACTOR, I_E	1.25
SEISMIC IMPORTANCE FACTOR, I_p	1.00
MAPPED RESPONSE PARAMETER (SHORT), S_S	0.959g
MAPPED RESPONSE PARAMETER (1-SEC), S_1	0.351g
SITE CLASS	D
DESIGN RESPONSE PARAMETER (SHORT), S_{DS}	0.767g
DESIGN RESPONSE PARAMETER (1-SEC), S_{D1}	0.684g
SEISMIC DESIGN CATEGORY	D
LONG PERIOD TRANSITION PERIOD, T_L	8 SECONDS
BASIC SEISMIC-FORCE-RESISTING SYSTEM	GENERATOR
SEISMIC RESPONSE COEFFICIENT, Fp	5.91 KIPS
COMPONENT AMPLIFICATION FACTOR, ap	1.0
RESPONSE MODIFICATION COEFFICIENT, Rp	2.5
ANALYSIS PROCEDURE	CHAPTER 13 OF ASCE 7-16

6. FLOOD DESIGN DATA: NOT APPLICABLE

EXISTING STRUCTURE REFERENCE DOCUMENTS

THE EXISTING CONDITIONS SHOWN ON THESE CONTRACT DOCUMENTS ARE DEVELOPED FROM THE AVAILABLE RECORD DRAWINGS. THE CONTRACTOR SHALL FIELD VERIFY ALL EXISTING CONDITIONS PRIOR TO PROCEEDING WITH ANY DEMOLITION, ORDERING, OR FABRICATING ANY MATERIALS. IF RECORD DRAWINGS ARE AVAILABLE, AND AVAILABLE FOR DISTRIBUTION, OBTAIN A COPY PRIOR TO CONSTRUCTION. DURING CONSTRUCTION, THE CONTRACTOR SHALL NOT ALTER, DAMAGE, OR REMOVE ANY PORTIONS OF THE EXISTING STRUCTURE (INCLUDING NONSTRUCTURAL COMPONENTS) UNLESS SPECIFICALLY INDICATED ON THESE CONSTRUCTION DOCUMENTS.

RECORD DRAWINGS USED TO DEVELOP THESE CONTRACT DOCUMENTS:	
DRAWING TITLE:	PLANS FOR THE CONSTRUCTION OF THE POINSETTIA SEWAGE LIFT STATION IN THE CARLSBAD MUNICIPAL WATER DISTRICT
ENGINEER OF RECORD:	WILSON ENGINEERING CONSULTING ENGINEERS
DATE OF RECORD:	1999

DEFERRED SUBMITTALS

IN ACCORDANCE WITH THE 2022 CBC, SECTION 107.3.4.1 SUBMITTAL DOCUMENTS FOR DEFERRED SUBMITTAL ITEMS SHALL BE SUBMITTED TO THE ENGINEER OF RECORD WHO SHALL REVIEW THEM AND FORWARD THEM TO THE AUTHORITY HAVING JURISDICTION WITH A NOTATION INDICATING THAT THE DEFERRED SUBMITTAL DOCUMENTS HAVE BEEN REVIEWED AND THAT THEY HAVE BEEN FOUND TO BE IN GENERAL CONFORMANCE WITH THE DESIGN. THE DEFERRED SUBMITTAL ITEMS SHALL NOT BE INSTALLED UNTIL THE DESIGN AND SUBMITTAL DOCUMENTS HAVE BEEN APPROVED BY THE BUILDING OFFICIAL OR AUTHORITY HAVING JURISDICTION.

PRIOR TO ORDERING OR FABRICATION OF ANY MATERIALS, AND PRIOR TO THE INSTALLATION OF THE INDICATED STRUCTURAL ELEMENTS, EQUIPMENT DISTRIBUTIONS SYSTEM, OR COMPONENT AND ITS ANCHORAGE. THE CONTRACTOR SHALL SUBMIT THE REQUIRED CALCULATIONS, SUPPORTING INFORMATION, AND DRAWINGS FOR REVIEW AND ACCEPTANCE BY THE ENGINEER. ALL DEFERRED SUBMITTALS AND CALCULATIONS SHALL BE IN ACCORDANCE WITH THE 2019 CALIFORNIA BUILDING CODE, INCLUDING THE DESIGN CRITERIA AND SPECIFICATIONS WITHIN THESE CONSTRUCTION DOCUMENTS. ALL DEFERRED SUBMITTAL CALCULATIONS AND DRAWINGS SHALL BE SEALED AND SIGNED BY A REGISTERED PROFESSIONAL CIVIL ENGINEER OR STRUCTURAL ENGINEER LICENSED IN THE STATE OF CALIFORNIA. THE FOLLOWING IS A LIST OF DEFERRED SUBMITTALS THAT ARE EXPECTED TO CONTAIN STRUCTURAL CALCULATIONS OR SAFETY RELATED SYSTEM INFORMATION FOR REVIEW TO MEET THE PROJECT REQUIREMENTS:

DEFERRED SUBMITTAL ITEMS
ANCHORAGE FOR GENERATOR AND FUEL TANK TO THE EXISTING FOUNDATION SYSTEM.

STRUCTURAL OBSERVATIONS:

STRUCTURAL OBSERVATION IS THE VISUAL OBSERVATION OF THE STRUCTURAL SYSTEM, STRUCTURAL ELEMENTS, AND THEIR CONNECTIONS FOR GENERAL CONFORMANCE TO THE CONTRACT DOCUMENTS AT SIGNIFICANT CONSTRUCTION STAGES AND AT THE COMPLETION OF THE STRUCTURAL SYSTEMS. STRUCTURAL OBSERVATION DOES NOT INCLUDE OR WAIVE THE RESPONSIBILITY FOR INSPECTIONS REQUIRED BY CHAPTER 17 OF THE 2022 CALIFORNIA BUILDING CODE OR THE CONTRACT DOCUMENTS. ALL STRUCTURAL OBSERVATIONS SHALL BE IN ACCORDANCE WITH CHAPTER 1704.6 OF THE 2022 CALIFORNIA BUILDING CODE. THE OWNER SHALL RETAIN A REGISTERED DESIGN PROFESSIONAL (LICENSED IN CALIFORNIA) OR THE ENGINEER OF RECORD TO PERFORM ALL THE STRUCTURAL OBSERVATIONS REQUIRED.

THE CONTRACTOR OR CONSTRUCTION MANAGER SHALL NOTIFY THE ENGINEER OF RECORD AND PERSONS PERFORMING THE STRUCTURAL OBSERVATION AT LEAST (5) FIVE WORKING DAYS (FOR EACH OBSERVATION) PRIOR TO THE WORK THAT IS REQUIRED TO BE OBSERVED IS COVERED. DEFICIENCIES FOUND DURING THE STRUCTURAL OBSERVATIONS SHALL BE CORRECTED BY THE CONTRACTOR. AT A MINIMUM, STRUCTURAL OBSERVATIONS SHALL BE IN ACCORDANCE WITH THE FOLLOWING TABLE:

STRUCTURAL OBSERVATION TABLE	
CONSTRUCTION SEQUENCE	WHAT TO OBSERVE
SUBGRADE AND SOIL PREPARATION	STRUCTURAL FILL AND SUBGRADE
	VERIFY THE MATERIALS BELOW THE FOUNDATION HAVE BEEN INSTALLED IN CONFORMANCE WITH THE CONTRACT DOCUMENTS
FOUNDATION	REINFORCEMENT FOR BAR SIZES, SPACING, CLEARANCES, DEPTH OF REINFORCEMENT TO TOP OF FORMS, FORMWORK. OBSERVE PRIOR TO CONCRETE PLACEMENT
	PLACEMENT OF WALL DOWELS, LAPS, ANCHOR BOLTS, STEEL EMBEDS
CONCRETE CONSTRUCTION	REINFORCEMENT FOR BAR SIZES, SPACING, CLEARANCE, OBSERVE PRIOR TO CONCRETE PLACEMENT, LAPS, ANCHOR BOLTS, EMBEDS

FINAL SUBMITTAL
(FOR CONSTRUCTION)

STRUCTURAL NOTES, SPECIAL INSPECTION AND TESTING TABLES

GENERAL

1. THE CONSTRUCTION SHALL CONFORM TO THE 2022 CALIFORNIA BUILDING CODE (CBC), AND THE APPLICABLE REFERENCED BUILDING CODE STANDARDS.
2. THESE NOTES AS WELL AS THE STANDARD DETAILS APPLY TO ALL PARTS OF THE PROJECT, UNLESS NOTED OTHERWISE.
3. THE DRAWINGS FOR THIS CONTRACT SHALL BE COORDINATED WITH FAVORABLY REVIEWED EQUIPMENT MANUFACTURER'S DRAWINGS. DIMENSIONS FOUNDATION DIMENSIONS ARE TO BE COORDINATED WITH FAVORABLY REVIEWED SUBMITTAL BY THE EQUIPMENT MANUFACTURER.
4. DETAILS CALLED OUT WITH S-XXXX SHALL REFER TO THE STANDARD DETAIL FOR WHICH THEY ARE SO NAMED.
5. ALL STRUCTURES HAVE BEEN DESIGNED FOR THE COMPLETE CONDITION CONSIDERING OPERATIONAL, HYDROSTATIC, BACKFILL LOADS, AND APPLICABLE DYNAMIC LOADS ONLY. THE STRUCTURES HAVE NOT BEEN DESIGNED TO RESIST OPERATIONAL, HYDROSTATIC OR BACKFILL LOADS WHILE PARTIALLY CONSTRUCTED. OVERLOADING ANY OF THE STRUCTURES OR STRUCTURAL ELEMENTS WHILE PARTIALLY CONSTRUCTED IS PROHIBITED.

COMPLIANCE

1. OBTAIN ALL PERMITS AND COORDINATING ALL INSPECTIONS REQUIRED BY THE SPECIAL INSPECTOR AND AS DESCRIBED IN THE CONTRACT DOCUMENTS.
2. THE CONTRACTOR SHALL NOTIFY THE SPECIAL INSPECTOR AT LEAST (5) FIVE WORKING DAYS PRIOR TO EACH SPECIAL INSPECTIONS AND TESTING REQUIRED. THE CONTRACTOR SHALL PROVIDE ACCESS TO THE WORK REQUIRED FOR SPECIAL INSPECTIONS AND TESTING.
3. THE CONTRACTOR SHALL DESIGN, DETAIL, FABRICATE, INSTALL AND MAINTAIN SHORING, SHEETING, BRACING AND SLOPING AS NECESSARY TO MAINTAIN SAFE EXCAVATIONS. THE CONTRACTOR SHALL BE RESPONSIBLE FOR ENSURING FULL COMPLIANCE WITH 29 CFR PART 1926 OSHA SUBPART P EXCAVATIONS AND TRENCHES REQUIREMENTS. ALL EARTHWORK SHALL BE PERFORMED IN STRICT ACCORDANCE WITH APPLICABLE LAW, INCLUDING LOCAL ORDINANCES, CAL/OSHA, HAWAII CIVIL CODE AND HAWAII DEPARTMENT OF INDUSTRIAL SAFETY REQUIREMENTS, AND APPLICABLE OSHA REQUIREMENTS.

CONTRACTOR RESPONSIBILITY

1. THE CONTRACTOR RESPONSIBLE FOR THE CONSTRUCTION OF A MAIN WIND -FORCE RESISTING SYSTEM OR A MAIN SEISMIC-FORCE-RESISTING SYSTEM, DESIGNATED SEISMIC SYSTEM, OR A WIND-FORCE-RESISTING COMPONENT, OR SEISMIC-FORCE RESISTING COMPONENT LISTED IN THE STATEMENT OF SPECIAL INSPECTIONS OR CONTRACT DOCUMENTS SHALL SUBMIT A WRITTEN STATEMENT OF RESPONSIBILITY TO THE OWNER OR AUTHORITY HAVING JURISDICTION OR OWNER'S AUTHORIZED AGENT, AND ENGINEER OF RECORD PRIOR TO COMMENCEMENT OF THE WORK ON THE SYSTEM OR COMPONENT. THE CONTRACTOR'S STATEMENT OF RESPONSIBILITY SHALL CONTAIN ACKNOWLEDGEMENT OF AWARENESS OF THE SPECIAL INSPECTIONS CONTAINED IN THE STATEMENT OF SPECIAL INSPECTIONS (REFERENCE 1704.4 OF THE 2022 CALIFORNIA BUILDING CODE).
2. THE CONTRACTOR SHALL CORRECT DISCREPANCIES IDENTIFIED IN THE SPECIAL INSPECTIONS AND TESTS WHERE WORK WAS NOT COMPLETED IN CONFORMANCE TO APPROVED CONSTRUCTION DOCUMENTS.

SOIL AND FOUNDATIONS

1. NO GEOTECHNICAL INVESTIGATION HAS BEEN PERFORMED FOR THIS PROJECT SITE. THE SOIL DESIGN VALUES USED FOR THE DESIGN OF THE FOUNDATION ARE CONSISTENT WITH THE ORIGINAL DESIGN INTENT AS PROVIDED ON THE RECORD DRAWINGS, AND THE PRESUMPTIVE LOAD-BEARING VALUES PER TABLE 1806.2 OF THE 2022 CALIFORNIA BUILDING CODE.
2. ALLOWABLE BEARING CAPACITY OF SOILS ARE REPORTED FOR DEAD AND LIVE LOADS ONLY. ALLOWABLE BEARING VALUES MAY BE INCREASED BY ONE-THIRD WHEN TRANSIENT LOADS SUCH AS WIND OR SEISMIC LOADS ARE INCLUDED. THE FOUNDATIONS DESIGN PARAMETERS ARE AS FOLLOWS:

   ALLOWABLE BEARING PRESSURE — 1,500 PSF
   COHESION — 130 PSF

3. EXCAVATE DOWN TO THE REQUIRED ELEVATIONS PRIOR TO BACKFILLING WITH COMPACTED FILL (SUBGRADE). NATIVE MATERIAL SHALL BE SCARIFIED TO A MINIMUM DEPTH OF 6-INCHES, COMPACTED, AND TESTED TO 95% RELATIVE COMPACTION PER ASTM D1557.
4. SUBGRADE (COMPACTED FILL) SHALL BE CLASS 2 AGGREGATE BASE (AB). COMPACTED FILL AND NATIVE MATERIALS 12-INCHES OR LESS NEED NOT TO COMPLY WITH AN APPROVED GEOTECHNICAL REPORT PROVIDED THE IN PLACE DENSITY IS NOT LESS THAN 90% OF THE MAXIMUM DRY DENSITY AT OPTIMUM MOISTURE CONTENT DETERMINED IN ACCORDANCE WITH ASTM D1557. COMPACT TO 95% RELATIVE COMPACTION AS DETERMINED BY ASTM D1557.
5. COMPACTION OF NATIVE MATERIALS AND COMPACTED FILL MATERIALS SHALL BE VERIFIED BY THE SPECIAL INSPECTOR PER THE 2022 CBC, SECTION 1804.6 AND THE SPECIAL INSPECTION NOTES ON DRAWINGS. THE SPECIAL INSPECTOR SHALL BE INDEPENDENT OF THE CONTRACTOR.

CONDUIT COORDINATION

1. ELECTRICAL CONDUIT AND PIPES SHALL BE ENCASED BELOW STRUCTURE FOUNDATIONS. DO NOT PLACE CONDUIT OR PIPING INSIDE THE FOOTINGS, SLABS, OR FOUNDATION PARALLEL TO THE MAIN LONGITUDINAL REINFORCEMENT.
2. CONDUIT SHALL MAINTAIN A MINIMUM OF 2-INCHES CLEAR TO REINFORCEMENT. CONDUIT OR PIPES SHALL NOT BE SUPPORTED DIRECTLY ON REINFORCING STEEL.
2. REINFORCEMENT SHALL NOT BE CUT, BENT, OR RELOCATED.
3. CONDUIT RUNNING PARALLEL TO REINFORCEMENT:
   3.1. THE OUTSIDE DIAMETER OF THE CONDUIT SHALL NOT EXCEED ONE-THIRD OF THE MEMBER THICKNESS.
   3.2. CONDUIT SHALL NOT BE SPACED CLOSER THAN 3 OUTSIDE DIAMETERS ON CENTER. THE MAXIMUM CONDUIT SIZE SHALL BE USED TO DETERMINE THE SPACING BETWEEN THE CONDUIT.
   3.3. CONDUIT SHALL BE LOCATED WITHIN THE MIDDLE THIRD OF THE FOUNDATION OR STRUCTURAL MEMBER, ONLY.
   3.4. DEVIATIONS WILL NOT BE PERMITTED WITHOUT SPECIFIC REVIEW AND ACCEPTANCE BY THE STRUCTURAL ENGINEER OF RECORD. ALL CONDUIT EMBEDDED INTO STRUCTURAL MEMBERS, SLABS, OR FOUNDATIONS WITHOUT ANY REVIEW BY THE STRUCTURAL ENGINEER OF RECORD SHALL BE REMOVED AT THE CONTRACTORS EXPENSE.
4. CONDUIT RUNNING PERPENDICULAR TO REINFORCEMENT:
   4.1. COORDINATE PLACEMENT TO AVOID OR MINIMIZE IMPACT TO REINFORCEMENT PLACEMENT.
   4.2. GROUPS OF CONDUIT THAT DAYLIGHT TO THE EDGE OR TP OF FOUNDATIONS OR SLABS-ON-GRADE SHALL BE BLOCKED-OUT LIKE AN OPENING IN THE STRUCTURE. AROUND THE PERIMETER OF THE BLOCK-OUT, PROVIDE ADDITIONAL REINF WITH (2) #5 TRIM BARS, SPACED 2-INCHES APART, IN-PLANE WITH TYPICAL REINFORCEMENT ON ALL SIDES, LAP WITH TYPICAL REINFORCEMENT.
   4.3. AT THE BLOCK-OUT: PROVIDE #5 DIAGONAL BARS AT EACH CORNER, LAP PAST EACH EDGE. BARS THAT TERMINATE AT SLAB EDGE SHALL HAVE A STANDARD HOOK.

REINFORCING STEEL (FOR CONCRETE)

1. REINFORCING STEEL (DEFORMED BARS) SHALL BE ASTM A615, GRADE 60.
2. ARRANGEMENT AND DETAILING OF REINFORCING STEEL, INCLUDING BAR SUPPORTS AND SPACERS, SHALL BE IN ACCORDANCE WITH THE LATEST ACI 315 DETAILING MANUAL AND CRSI. DO NOT PLACE REINFORCEMENT SUPPORTS GREATER THAN 36-INCHES ON-CENTER.
3. REINFORCING SHALL LAP IN ACCORDANCE WITH THE CONCRETE REINFORCEMENT SPLICE TABLE, UNLESS OTHERWISE SHOWN. DOWELS SHALL HAVE THE SAME SIZE AND SPACING AS THAT OF THE REINFORCING STEEL, UNLESS OTHERWISE NOTED.
4. HOOK REINFORCING BARS SHALL NOT BE INTERRUPTED BY OPENINGS.
5. NO WELDING OF REINFORCING BARS SHALL BE PERMITTED, UNLESS APPROVAL IN WRITING IS OBTAINED FROM THE ENGINEER OF RECORD PRIOR TO CONSTRUCTION.
6. DIMENSIONS TO REINFORCING ARE TO BAR CENTERLINES, UNLESS NOTED OTHERWISE BAR COVER IS CLEAR DISTANCE BETWEEN THE BAR AND THE CONCRETE SURFACE, UNLESS NOTED OR SHOWN OTHERWISE BAR COVER FOR REINFORCING STEEL SHALL BE AS FOLLOWS:

FOOTINGS AND BASE SLABS (FOR CONCRETE):	
FORMED SURFACES AND BOTTOMS ON CONCRETE WORK MAT	2-INCH
TOP SURFACES EXPOSED TO EARTH, WATER, OR WEATHER	2-INCH
BOTTOMS AND SIDES IN CONTACT WITH EARTH	3-INCH

CONCRETE

1. CONCRETE MIX DESIGNS SHALL BE IN ACCORDANCE WITH ACI 318-19 AND ACI 301-16. THE MINIMUM 28-DAY COMPRESSIVE STRENGTH (PSI) AS NOTED IN THE TABLE BELOW:

CONCRETE COMPRESSIVE STRENGTH TABLE			
TYPE ID	REQUIRED f ' c AT 28-DAYS	LOCATION FOR USE	W / CM
A	4,000 PSI	FOUNDATION, SLAB-ON-GRADE	0.50 MAX

2. MIX DESIGN :

FIELD TEST RECORDS	SUBMIT IN ACCORDANCE WITH CHAPTER 5.3 OF ACI 318
AIR CONTENT	OPTIONAL: 4% +/- 1% IN ACCORDANCE WITH ASTM C231
SLUMP	3 TO 4 INCHES, MAX. TESTED IN ACCORDANCE WITH ASTM C143

3. CEMENTITIOUS MATERIALS :

MINIMUM CONTENT	520 LBS / CUBIC YARD
PORTLAND CEMENT	TYPE II (LOW ALKALI) PER ASTM C150
POZZOLAN	CLASS F FLYASH PER ASTM C618. NOT TO EXCEED 15% OF TOTAL CEMENTITIOUS MATERIALS. POZZOLAN SUPPLIED DURING THE LIFE OF THE PROJECT SHALL BE FROM THE SAME SINGLE SOURCE. CLASS C FLYASH WILL NOT BE PERMITTED FOR USE.

4. AGGREGATE IN CONCRETE :
   4.1. AGGREGATES SHALL BE CLEAN, AND CONFORM TO ASTM C33 AND THE TABLES BELOW.
   4.2. AGGREGATES SHALL NOT BE REACTIVE. PROVIDE DOCUMENTATION THAT AGGREGATES HAVE BEEN VERIFIED TO BE NON-REACTIVE PER ASTM C1260. TEST RESULTS SHALL NOT BE OLDER THAN 1-YEAR, SUBMIT FOR REVIEW.

COARSE	CONFORM TO TABLE 2 OF ASTM C33. THE NOMINAL MAXIMUM SIZE OF COARSE AGGREGATE SHALL NOT EXCEED THREE-FOURTHS OF THE MINIMUM CLEAR SPACING BETWEEN REINFORCING BARS, ONE-FIFTH OF THE NARROWEST DIMENSION, BETWEEN SIDES OF FORMS, AND ONE-THIRD OF THE THICKNESS OF SLABS OR WALLS.
FINE	CONFORM TO TABLE 1 OF ASTM C33

COMBINED AGGREGATE GRADATION (% PASSING SIEVE)										
1-1/2"	1"	3/4"	3/8"	NO. 4	NO. 8	NO. 16	NO. 30	NO. 50	NO. 100	NO. 200
100	90 - 100	55 - 100	45 - 75	35 - 60	27 - 45	20 - 35	12 - 25	3 - 15	0 - 5	0 - 2

5. ADMIXTURES (OPTIONAL) :

AIR ENTRAINING	ASTM C260
WATER REDUCING	ASTM C494, TYPE A

6. OPENINGS, PIPE SLEEVES, CONDUITS, INSERTS AND OTHER EMBEDDED ITEMS SHALL BE IN PLACE BEFORE CONCRETE IS PLACED. IT IS THE CONTRACTOR'S RESPONSIBILITY TO COORDINATE ELECTRICAL, INSTRUMENTATION AND OTHER PLANS FOR ITEMS REQUIRING SLEEVES AND EMBEDMENTS IN CONCRETE WHICH ARE NOT INDICATED OR SHOWN ON STRUCTURAL DRAWINGS. NO PIPES OR SLEEVES SHALL PASS THROUGH STRUCTURAL MEMBERS(UNLESS SHOWN ON STRUCTURAL DRAWINGS). COORDINATE WITH EQUIPMENT MANUFACTURERS DRAWINGS FOR ANCHORING DEVICES.
7. UNLESS OTHERWISE NOTED, ALL EXPOSED EDGES AND CORNERS SHALL BE CHAMFERED 3/4-INCH. INTERIOR FLOOR SLABS AND EXTERIOR SIDEWALKS SHALL HAVE TOOLED 3/8-INCH RADIUS CONSTRUCTION JOINT.
8. PROVIDE TROWEL FINISH AT HORIZONTAL SURFACES IN ACCORDANCE WITH ACI 301.
9. FOUNDATIONS SHALL BE PER THE CONTRACT DOCUMENTS. IF NOT SHOWN, EACH FACE CONCRETE SHALL BE REINFORCED WITH # 5 BARS AT 12-INCHES EACH WAY, UNLESS OTHERWISE NOTED.
10. CONCRETE ENCASE ALL PIPES AND CONDUITS UNDER CONCRETE SLABS, FOUNDATIONS, AND STRUCTURES.
11. CONCRETE SHALL BE PLACED AND CURED BETWEEN 50 AND 90 DEGREES F. CONCRETE SHALL NOT BE PLACED WHEN THE AMBIENT TEMPERATURE EXCEEDS 90 DEGREES F.
12. SUBMIT REINFORCEMENT SHOP DRAWINGS AND CONCRETE MIX DESIGN FOR REVIEW TO THE ENGINEER OF RECORD.

POST-INSTALLED ANCHORS

1. POST-INSTALLED ANCHORS SHALL BE STAINLESS STEEL TYPE 304. POST-INSTALLED ANCHORS SHALL HAVE A CURRENT AND RELATIVE ICC-ES OR IAPMO-UES REPORT. POST-INSTALLED ANCHORS WITHOUT A CURRENT AND RELATIVE ICC-ES OR IAMPO-UES REPORT WILL NOT BE ACCEPTED.
2. NUTS SHALL BE ASTM F594, ALLOY GROUP 1 CW1 (F954C) OR CW2 (F594D). NUTS SHALL BE HEX OR HEAVY HEX HEAD AND SHALL MEET THE DIMENSIONAL REQUIREMENTS OF ASME B18.2.2
3. WASHERS SHALL BE STAINLESS STEEL TYPE 304 (AISI 304). WASHERS SHALL BE ROUND AND MEET THE DIMENSIONAL REQUIREMENTS OF ASME B18.21.1
4. SUBMIT ANCHOR INFORMATION, WASHERS, AND NUTS FOR SUBMITTAL REVIEW PRIOR TO ORDERING OR FABRICATING ANY MATERIALS.
5. LOCATE AND AVOID ALL REINFORCEMENT PRIOR TO DRILLING INTO THE CONCRETE. FOLLOW THE MANUFACTURER'S REQUIREMENTS AND ICC-ES OR IAPMO-UES REPORT FOR INSTALLATION INSTRUCTIONS.
6. CONCRETE SHALL HAVE A MINIMUM AGE OF 21-DAYS, SHALL NOT BE EXPOSED TO WATER FOR THE PRECEDING 14-DAYS, AND SHALL HAVE A MINIMUM COMPRESSIVE STRENGTH OF 2,500 PSI AT THE TIME OF ANCHOR INSTALLATION. DO NOT DRILL INTO CONCRETE PRIOR TO 21-DAYS.

SPECIAL INSPECTION AND TESTING - GENERAL NOTES

1. THE OWNER OR THE OWNER'S AUTHORIZED AGENT, INDEPENDENT OF THE CONTRACTOR, SHALL EMPLOY ONE OR MORE APPROVED AGENCIES TO PROVIDE SPECIAL INSPECTIONS AND TESTING IN ACCORDANCE WITH CHAPTER 17 OF THE 2022 CALIFORNIA BUILDING CODE AND THE CONTRACT DOCUMENTS DURING CONSTRUCTION ON THE TYPES OF WORK SPECIFIED. STRUCTURAL SPECIAL INSPECTIONS AND TESTING SHALL GOVERN THE QUALITY, WORKMANSHIP AND REQUIREMENTS FOR MATERIALS COVERED. MATERIALS OF CONSTRUCTION AND TESTING SHALL CONFORM TO THE APPLICABLE STANDARDS LISTED IN THE REFERENCED BUILDING CODE AND CONTRACT DOCUMENTS.
2. REPORT REQUIREMENT: APPROVED AGENCIES SHALL KEEP RECORDS OF SPECIAL INSPECTIONS AND TESTS. THE APPROVED AGENCY SHALL SUBMIT REPORTS OF SPECIAL INSPECTIONS AND TESTS TO THE AUTHORITY HAVING JURISDICTION AND TO THE REGISTERED DESIGN PROFESSIONAL IN RESPONSIBLE CHARGE. REPORTS SHALL INDICATE THAT WORK INSPECTED OR TESTED WAS OR WAS NOT COMPLETED IN CONFORMANCE TO APPROVED CONSTRUCTION DOCUMENTS. DISCREPANCIES SHALL BE BROUGHT TO THE IMMEDIATE ATTENTION OF THE CONTRACTOR FOR CORRECTION. IF THEY ARE NOT CORRECTED, THE DISCREPANCIES SHALL BE BROUGHT TO THE ATTENTION OF THE AUTHORITY HAVING JURISDICTION AND TO THE REGISTERED DESIGN PROFESSIONAL IN RESPONSIBLE CHARGE PRIOR TO THE COMPLETION OF THAT PHASE OF THE WORK. A FINAL REPORT DOCUMENTING REQUIRED SPECIAL INSPECTIONS AND TESTS AND CORRECTION OF ANY DISCREPANCIES NOTED IN THE INSPECTIONS OR TESTS SHALL BE SUBMITTED AT A POINT IN TIME AGREED UPON PRIOR TO THE START OF WORK BY THE OWNER OR THE OWNER'S AUTHORIZED AGENT TO THE AUTHORITY HAVING JURISDICTION.

STATEMENT OF SPECIAL INSPECTIONS

1. THE SPECIAL INSPECTION AND TESTING NOTES AND TABLES WITHIN THESE CONTRACT DOCUMENTS WILL ACT AS A STATEMENT OF SPECIAL INSPECTIONS, UNLESS ADDITIONAL INFORMATION OR DOCUMENTATION IS REQUIRED BY THE AUTHORITY HAVING JURISDICTION.

SOILS			
SPECIAL INSPECTIONS AND TESTS OF EXISTING SITE SOIL CONDITIONS, FILL PLACEMENT AND LOAD-BEARING REQUIREMENTS SHALL BE PERFORMED IN ACCORDANCE WITH THE FOLLOWING.			
REQUIRED SPECIAL INSPECTIONS AND TESTS			
SPECIAL INSPECTION REQUIRED	TYPE	CONT	PERIODIC
YES	1. VERIFY MATERIALS BELOW SHALLOW FOUNDATIONS ARE ADEQUATE TO ACHIEVE THE DESIGN BEARING CAPACITY.	--	X
YES	2. VERIFY EXCAVATIONS ARE EXTENDED TO PROPER DEPTH AND HAVE REACHED PROPER MATERIAL.	--	X
YES	3. PERFORM CLASSIFICATION AND TESTING OF COMPACTED FILL MATERIALS.	--	X
YES	4. VERIFY USE OF PROPER MATERIALS, DENSITIES AND LIFT THICKNESSES DURING PLACEMENT AND COMPACTION OF COMPACTED FILL.	X	--
YES	5. PRIOR TO PLACEMENT OF COMPACTED FILL, OBSERVE SUBGRADE AND VERIFY THAT SITE HAS BEEN PREPARED PROPERLY.	--	X

CONCRETE CONSTRUCTION					
REQUIRED SPECIAL INSPECTIONS AND TESTS					
SPECIAL INSPECTION REQUIRED	TYPE	CONT	PERIODIC	REFERENCED STANDARD (a)	CBC REF
YES	1. INSPECT REINFORCEMENT, INCLUDING SIZE AND GRADE, VERIFY PLACEMENT.	--	X	ACI 318 Ch. 20, 25.2, 25.3, 26.6.1 - 26.6.3	1908.4
YES	3. INSPECT ANCHORS CAST IN CONCRETE.	--	X	ACI 318 17.8.2	--
	4. INSPECT ANCHORS POST-INSTALLED IN HARDENED CONCRETE MEMBERS.				
YES	a. ADHESIVE ANCHORS INSTALLED IN HORIZONTALLY OR UPWARDLY INCLINED ORIENTATIONS TO RESIST SUSTAINED TENSION LOADS.	X	--	ACI 318 17.8.2.4	--
YES	b. MECHANICAL ANCHORS AND ADHESIVE ANCHORS NOT DEFINED IN 4.a.	--	X	ACI 318 17.8.2	
YES	5. VERIFY USE OF REQUIRED DESIGN MIX.	--	X	ACI 318 Ch. 19, 26.4.3, 26.4.4	1904.1 1904.2 1908.2 1908.3
YES	6. PRIOR TO CONCRETE PLACEMENT, FABRICATE SPECIMENS FOR STRENGTH TESTS, PERFORM SLUMP AND AIR CONTENT TESTS AND DETERMINE THE TEMPERATURE OF THE CONCRETE. a.) COMPRESSIVE STRENGTH TESTS SHALL BE PERFORMED ON EACH 100 CUBIC YARDS OR FRACTION THEREOF. OF OF EACH CONCRETE MIX PLACED IN ANY ONE DAY, IN ACCORDANCE WITH ASTM C39. b. SLUMP TESTS SHALL BE PERFORMED ON EACH 50 CUBIC YARDS IN ACCORDANCE WITH ASTM C143. c. AIR CONTENT TESTED PER ASTM C231 OR ASTM C173, MADE WITH SAMPLES FROM FIRST THREE BATCHES AND UNTIL THREE BATCHES MEET AIR CONTENTS SPECIFIED. d. CONCRETE TEMPERATURE SHALL BE TESTED IN ACCORDANCE WITH ASTM C1064.	X	--	ASTM C172, ASTM C1064, ASTM C143, ASTM C31, ASTM C39, ACI 318 26.4, 26.12	1908.10
YES	7. VERIFY MAINTENANCE OF SPECIFIED CURING TEMPERATURE AND TECHNIQUES.	--	X	ACI 318 26.5.3 - 26.5.5	1908.9
YES	8. VERIFY IN-SITU CONCRETE STRENGTH, PRIOR TO REMOVAL OF SHORES AND FORMS FROM BEAMS AND STRUCTURAL SLABS.	--	X	ACI 318 26.11.2	--
YES	9. INSPECT FORMWORK FOR SHAPE, LOCATION AND DIMENSIONS OF THE CONCRETE MEMBER BEING FORMED,	--	X	ACI 318 26.11.1.2(b)	--

STRUCTURAL ABBREVIATIONS

&	AND	JT	JOINT
@	AT		
#	NUMBER	KIP	1,000 POUNDS
Ø	DIAMETER	KSI	KIPS PER SQUARE INCH
ℓ_d	DEVELOPMENT LENGTH		
AASHTO	AMERICAN ASSOCIATION OF STATE HIGHWAY TRANSPORTATION OFFICIAL	L,∠	ANGLE
		LB(S)	POUNDS
		LB/SF	POUND(S) PER SQUARE FOOT
AB	AGGREGATE BASE, ANCHOR BOLT	LL	LIVE LOAD
		LLH	LONG LEG HORIZONTAL
ACI	AMERICAN CONCRETE INSTITUTE	LLV	LONG LEG VERTICAL
		LLBB	LONG LEG BACK-TO-BACK
ADD	ADDITIONAL	LONGIT	LONGITUDINAL
ADJ	ADJACENT	LT	LIGHT
AISC	AMERICAN INSTITUTE OF STEEL CONSTRUCTION	LW	LIGHT WEIGHT
AISI	AMERICAN IRON AND STEEL INSTITUTE	MATL	MATERIAL
		MAX	MAXIMUM
AITC	AMERICAN INSTITUTE OF TIMBER CONSTRUCTION	MB	MACHINE BOLT
		MC	MOISTURE CONTENT
ALUM	ALUMINUM	MC	MISCELLANEOUS CHANNEL
ALT	ALTERNATE	MECH	MECHANICAL
ANSI	AMERICAN NATIONAL STANDARDS INSTITUTE	M

DocuSign Envelope ID: 22E0CD66-5F4E-491C-A1CF-7BC34D603F05

LAP SPLICE LENGTH FOR REINFORCING BARS IN WALLS, SLABS & FTNGS (INCHES)

CONCRETE COMPRESSIVE STRENGTH, f'c ≥ 3,000 PSI						
BAR SIZE	COVER=1.00 IN.		COVER=1.50 IN.		COVER=2.00 IN.	
IMPERIAL [SOFT METRIC]	TOP [d]	OTHER	TOP [d]	OTHER	TOP [d]	OTHER
#3 [#10]	17	16	17	16	17	16
#4 [#13]	23	17	23	17	23	17
#5 [#16]	33	26	28	22	28	22
#6 [#19]	46	35	34	26	34	26
#7 [#22]	74	57	55	43	49	38
#8 [#25]	93	72	70	54	56	43
#9 [#29]	113	87	86	66	69	53
#10 [#32]	137	106	105	81	85	66
#11 [#36]	162	125	125	97	102	79

NOTES:

1. THE LAP LENGTH TABLE IS SPECIFIC TO TENSION DEVELOPMENT AND TENSION LENGTHS FOR WALLS, SLABS, AND FOOTINGS IN CONCRETE IN ACCORDANCE WITH ACI 318-19, CHAPTER 25 AND THE CRITERIA IN THIS DETAIL. CONTACT THE ENGINEER OF RECORD FOR ANY DISCREPANCIES TO THE CRITERIA IN THIS DETAIL.
2. LAP SPLICE LENGTHS ARE CLASS B LAPS, IN INCHES, FOR GRADE 60 REINFORCEMENT IN NORMAL WEIGHT CONCRETE WITH f'c GREATER THAN OR EQUAL TO 3,000 PSI.
3. CENTER-TO-CENTER SPACING OF REINFORCING SHALL BE GREATER THAN TWICE THE CONCRETE COVER PLUS ONE BAR DIAMETER.
4. TOP BARS ARE HORIZONTAL BARS WITH MORE THAN 12 INCHES OF CONCRETE CAST BELOW BARS.
5. FOR BARS OF DIFFERENT SIZES, THE LAP SPLICE LENGTHS OF THE SMALLER BAR SHALL BE USED.
6. STAGGER LAPS A DISTANCE OF ONE-HALF THE SPLICE LENGTH, UNLESS OTHERWISE NOTED.

CONCRETE REBAR LAP SPLICE

S-3010

SCALE: NTS
REV 01

D = FINISHED INSIDE BEND DIAMETER (INCLUDES SPRINGBACK)

d = BAR DIAMETER

ACI 318-19 MIN BEND DIAMETER:
6d FOR #3 THROUGH #8
8d FOR #9, #10 & #11
10d FOR #14 AND #18

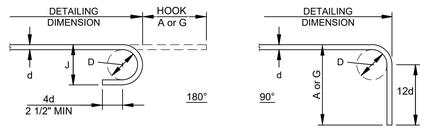

RECOMMENDED END HOOK DIMENSIONS				
BAR SIZE	D	180 ° HOOKS		90° HOOKS
		A or G	J	A or G
#3	0'-2 1/4"	0'-5"	0'-3"	0'-6"
#4	0'-3"	0'-6"	0'-4"	0'-8"
#5	0'-3 3/4"	0'-7"	0'-5"	0'-10"
#6	0'-4 1/2"	0'-8"	0'-6"	1'-0"
#7	0'-5 1/4"	0'-10"	0'-7"	1'-2"
#8	0'-6"	0'-11"	0'-8"	1'-4"
#9	0'-9 1/2"	1'-3"	0'-11 3/4"	1'-7"
#10	0'-10 3/4"	1'-5"	1'-1 1/4"	1'-10"
#11	1'-0"	1'-7"	1'-2 3/4"	2'-0"

REINFORCING HOOKS

S-3020

SCALE: NTS
REV 01

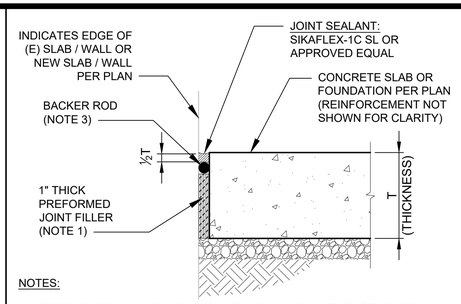

NOTES:

1. PREFORMED JOINT FILLER SHALL COMPLY WITH ASTM D1752, TYPE 1.
2. BOND BREAKER TAPE SHALL BE AN ADHESIVE BACKED GLAZED BUTYL OR POLYETHYLENE TAPE WHICH WILL SATISFACTORY ADHERE TO THE PREFORMED JOINT FILLER OR CONCRETE SURFACE. THE TAPE SHALL BE THE SAME WIDTH AS THE JOINT.
3. BACKING ROD: 1-1/4" Ø EXTRUDED, CLOSED CELL, POLYETHYLENE FOAM ROD. BACKING ROD SHALL BE COMPATIBLE WITH SEALANT.

EXPANSION JOINT

SLAB AT WALL OR ADJACENT SLAB TO SLAB

S-3161

SCALE: NTS
REV 01

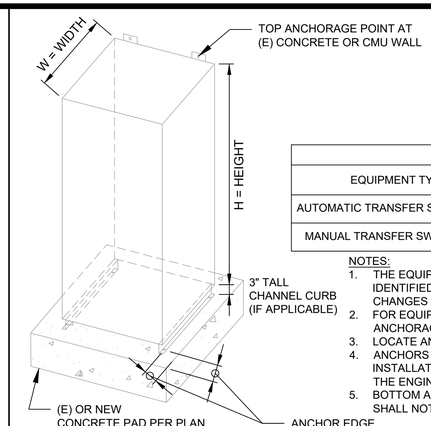

ISOMETRIC OF EQUIPMENT

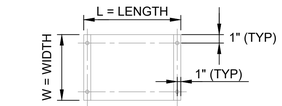

PLAN VIEW - ANCHORAGE LOCATIONS AT BOTTOM

EQUIPMENT ANCHORAGE SCHEDULE					
EQUIPMENT TYPE	EQUIPMENT DIMENSIONS (W x D x H)	MAXIMUM OPERATING WEIGHT	ANCHORAGE AT BOTTOM	MINIMUM EDGE DISTANCE	ANCHORAGE AT TOP
AUTOMATIC TRANSFER SWITCH (ATS)	24" L x 17" W x 63" TALL	400 LBS	(4) 1/2" Ø X 3.75" EMBEDMENT	SEE NOTE 5	(2) 1/2" Ø X 3.75" EMBEDMENT
MANUAL TRANSFER SWITCH (MTS)	38" L x 24" W x 73" TALL	650 LBS	(4) 1/2" Ø X 3.75" EMBEDMENT	6 INCHES	NOT APPLICABLE

NOTES:

1. THE EQUIPMENT LISTED IN THIS SCHEDULE HAVE BEEN DESIGNED FOR THE OPERATING WEIGHT AND CONSTRAINTS IDENTIFIED. CONTACT THE ENGINEER OF RECORD FOR ANY DISCREPANCIES DURING EQUIPMENT SUBMITTAL PROCUREMENT. CHANGES OR MODIFICATIONS TO THE ATTACHMENT POINTS OR EXISTING STRUCTURE MAY BE REQUIRED.
2. FOR EQUIPMENT NOT LISTED ABOVE, OR EQUIPMENT THAT IS LESS THAN 400 LBS FLOOR MOUNTED, EXCEPTIONS TO ANCHORAGE DESIGN MAY APPLY. SUBMIT ANY EQUIPMENT NOT LISTED FOR FAVORABLY REVIEW.
3. LOCATE AND AVOID ALL REINFORCEMENT PRIOR TO DRILLING INTO THE CONCRETE OR CMU.
4. ANCHORS SHALL BE STAINLESS STEEL TYPE 304 HILTI KWIK BOLT-TZ2 OR APPROVED EQUAL. FOLLOW ICC ESR-4266 FOR INSTALLATION INSTRUCTION AND RECOMMENDATIONS. ALTERNATE ANCHORS ARE SUBJECT TO A FAVORABLY REVIEW BY THE ENGINEER OF RECORD AND SHALL HAVE A CURRENT ICC-ESR OR IAPMO-UES REPORT.
5. BOTTOM ANCHORAGE LOCATIONS AT (E) CONCRETE PAD OR FOUNDATION. MINIMUM CONCRETE EDGE DISTANCE TO ANCHOR SHALL NOT BE LESS THAN 2.5-INCHES.

EQUIPMENT ANCHORAGE SCHEDULE

SCALE: NTS

1 / E-5

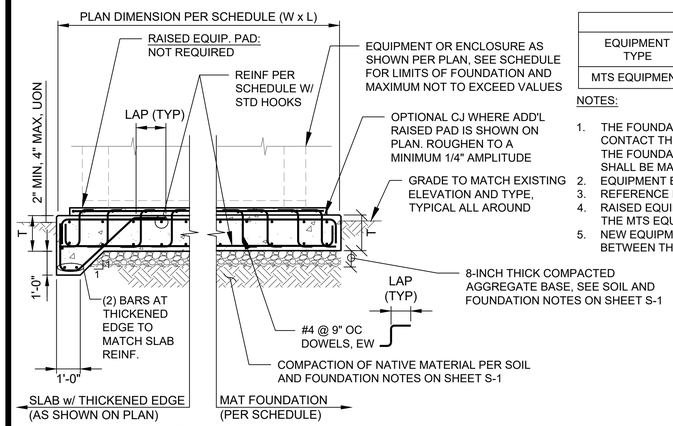

SECTION VIEW

CONCRETE EQUIPMENT PAD SCHEDULE							
EQUIPMENT TYPE	EQUIPMENT DIMENSIONS	MAX OPERATING WEIGHT	FOUNDATION TYPE	LENGTH (L)	WIDTH (W)	THICKNESS (T)	REINFORCEMENT
MTS EQUIPMENT	38" L x 24" W X 73" TALL	650 LBS	MAT	4'-2"	3'-0"	12"	#5 @ 12" OC, EW, T&B

NOTES:

1. THE FOUNDATIONS IDENTIFIED IN THIS SCHEDULE HAVE BEEN DESIGNED FOR THE OPERATING WEIGHT AND CONSTRAINTS IN THE TABLE. CONTACT THE ENGINEER OF RECORD FOR ANY DISCREPANCIES DURING THE EQUIPMENT SUBMITTALS. CHANGES OR MODIFICATIONS TO THE FOUNDATIONS MAY BE REQUIRED BASED EXCEEDING THE LIMITS IN THE SCHEDULE. UNLESS OTHERWISE SHOWN, ALL FOUNDATIONS SHALL BE MAT FOUNDATIONS.
2. EQUIPMENT BASE PLATE SHALL BE UNDERLAIN BY A MINIMUM 1/4" NON-SHRINK GROUT, 1/2" MAXIMUM NON-SHRINK GROUT.
3. REFERENCE DETAIL 1/S-2 FOR EQUIPMENT ANCHORAGE DESIGN FOR SPECIFIED EQUIPMENT IN THE SCHEDULE.
4. RAISED EQUIPMENT PAD MAY BE REQUIRED PER THE EQUIPMENT MANUFACTURER OR PER ELECTRICAL DRAWINGS. NOT REQUIRED FOR THE MTS EQUIPMENT, UNLESS REQUESTED BY THE CITY.
5. NEW EQUIPMENT PADS PLACED AGAINST EXISTING OR NEW WALLS OR FOUNDATIONS SHALL HAVE AN EXPANSION JOINT PLACED BETWEEN THE NEW CONCRETE EQUIPMENT PAD AND THE EXISTING OR NEW WALL OR FOUNDATION PER DETAIL S-3161.

EQUIPMENT FOUNDATION SCHEDULE

TYPICAL FOR EXTERIOR EQUIPMENT

S-3342

SCALE: NTS
REV 01

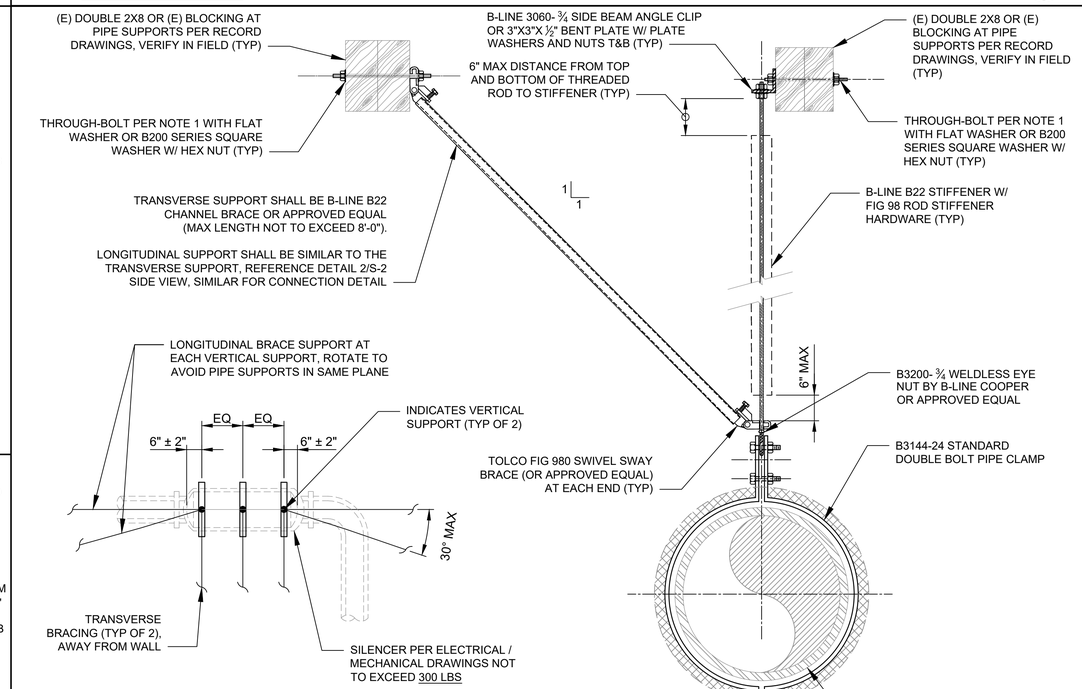

PLAN VIEW - BRACING SCHEMATIC

SECTION VIEW

NOTES:

1. CONNECTIONS AT EXISTING DOUBLE 2X JOISTS SHALL BE WITH A 3/4" Ø DIAMETER STAINLESS STEEL (TYPE 304) THREADED BOLT W/ WASHERS AND NUTS AT EACH END (TYP).
2. ROD STIFFENERS SHALL BE INSTALLED WHERE THE THREADED ROD EXCEEDS 1'-0" IN LENGTH.
3. LOCATE SILENCER SUPPORTS AS SHOWN PER PLAN VIEW - BRACING SCHEMATIC.
4. CAREFULLY REMOVE ALL EXISTING PIPE INSULATION AND RE-USE EXISTING PIPE INSULATION OR REPLACE TO MACH EXISTING.

SILENCER SUPPORT DETAIL

SCALE: NTS

3 / S-3

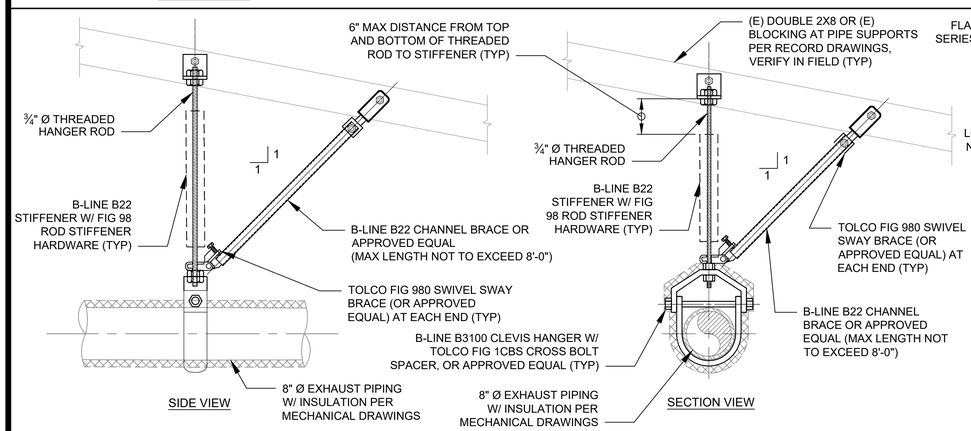

SIDE VIEW

SECTION VIEW

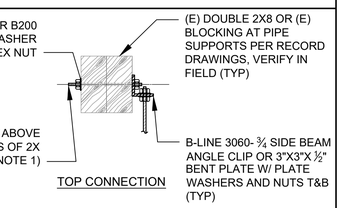

TOP CONNECTION

NOTES:

1. CONNECTIONS AT EXISTING DOUBLE 2X JOISTS SHALL BE WITH A 3/4" Ø DIAMETER STAINLESS STEEL (TYPE 304) THREADED BOLT W/ WASHERS AND NUTS AT EACH END (TYP).
2. ROD STIFFENERS SHALL BE INSTALLED WHERE THE THREADED ROD EXCEEDS 1'-0" IN LENGTH.
3. LOCATE PIPE SUPPORTS WITHIN 6-INCHES OF EACH 90° TURN, OR AT ENDS OF CONNECTIONS WITHIN 6-INCHES. THE MAXIMUM PIPE SUPPORT SPACING SHALL NOT EXCEED 4'-0" OC.
4. CAREFULLY REMOVE ALL EXISTING PIPE INSULATION AND RE-USE EXISTING PIPE INSULATION OR REPLACE TO MACH EXISTING.

EXHAUST PIPE SUPPORT

SCALE: NTS

2 / S-3

S-2

FINAL SUBMITTAL
(FOR CONSTRUCTION)

REGISTERED PROFESSIONAL ENGINEER — STRUCTURAL — STATE OF CALIFORNIA — S 6474 — EXP. 03/31/2024 — signed: 11/22/2023

11/22/2023

Kennedy Jenks
9325 SKY PARK COURT, SUITE 300
SAN DIEGO, CA 92123
858-676-7500

SUBMITTED: TIMOTHY WATERS 11/22/2023
PROJECT MANAGER DATE

DATE	INITIAL	REVISION DESCRIPTION	DATE	INITIAL	DATE	INITIAL
ENGINEER OF WORK			OTHER APPROVAL		ACCEPTED	

SHEET 24 — CITY OF CARLSBAD, UTILITIES DEPARTMENT — SHEETS 25

IMPROVEMENT PLAN FOR:
STRUCTURAL
STANDARD DETAILS
POINSETTIA LIFT STATION GENERATOR REPLACEMENT

ACCEPTED BY: DAVE PADILLA
Dave Padilla 12/19/2023
ENGINEERING MANAGER DATE

DWN BY: PIB
CHKD BY: PDS
RVWD BY: -

PROJECT NO. 3840-23

DRAWING NO. 540-9

DocuSign Envelope ID: 22E0CD66-5F4E-491C-A1CF-7BC34D603F05

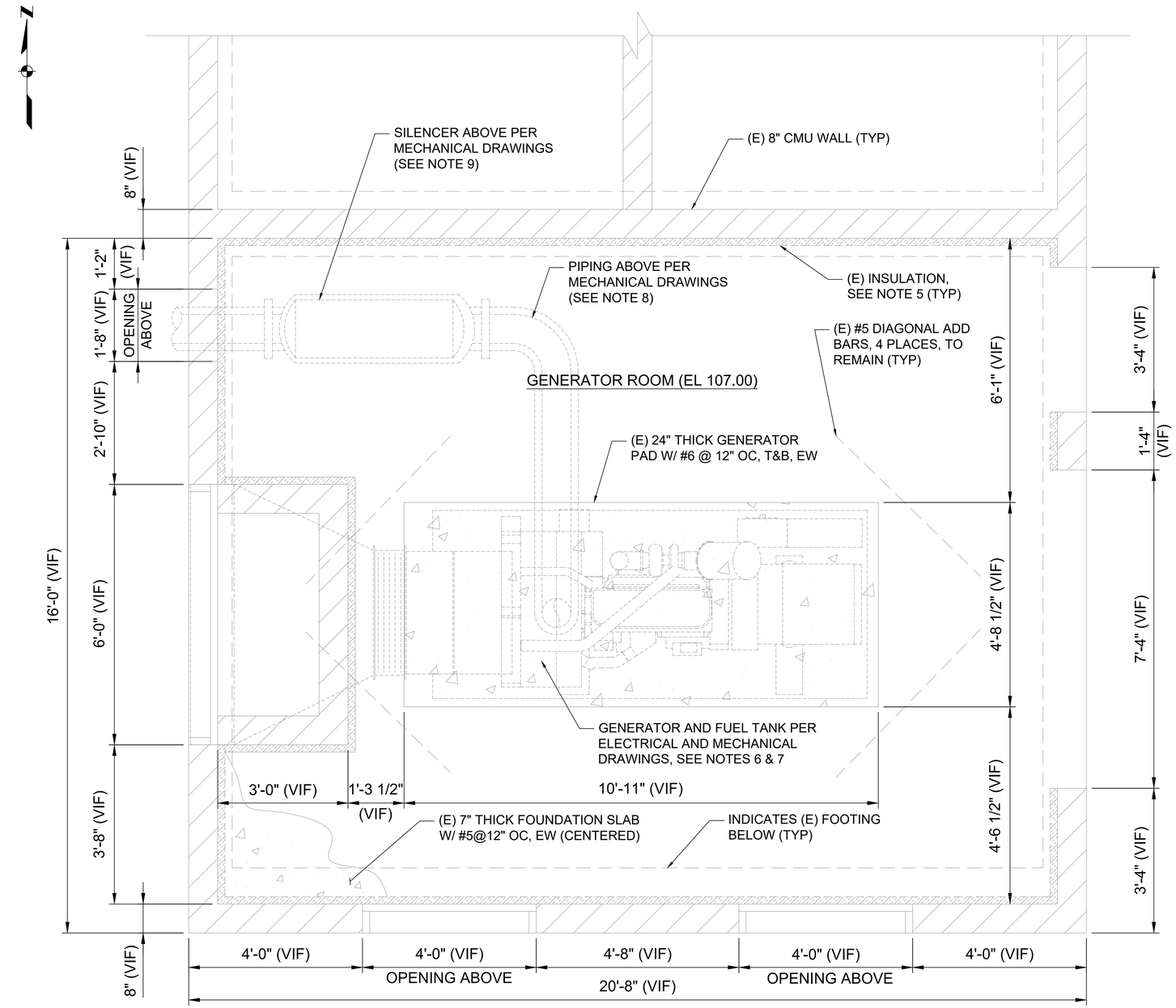

GENERATOR ROOM - FOUNDATION PLAN

SCALE: NTS

NOTES

1. ALL DIMENSIONS AND SIZES SHOWN ARE APPROXIMATE AND PROVIDED AS AN AID IN INTERPRETING THE ANTICIPATED EXISTING CONDITIONS. THE DIMENSIONS SHOWN ARE TO THE FACE OF EXISTING CMU WALL AND NOT TO THE FACE OF THE EXISTING INSULATION. "VIF" INDICATES "VERIFY IN FIELD". FIELD VERIFY ALL DIMENSIONS SHOWN WITH EXISTING CONDITIONS.
2. THE CONTRACTOR SHALL FIELD VERIFY ALL EXISTING CONDITIONS PRIOR TO ORDERING OR FABRICATING ANY MATERIALS. NOTIFY THE ENGINEER OF RECORD OF ANY POSSIBLE DISCREPANCIES BEFORE CONSTRUCTION.
3. DO NOT DAMAGE, OVERCUT, SCRATCH, OR CRACK ANY PORTION OF THE EXISTING STRUCTURE NOT INTENDED TO BE MODIFIED. PROTECT AND PRESERVE PORTIONS OF THE EXISTING STRUCTURE NOT INTENDED TO BE MODIFIED.
4. REFERENCE ELECTRICAL AND MECHANICAL DRAWINGS FOR THE SCOPE OF ITEMS TO BE REMOVED OR DEMOLISHED. EXISTING ANCHOR BOLTS SHALL BE CUT, BURNED BACK APPROXIMATELY 1-INCH, AND PATCHED WITH A NON-SHRINK, NON-METALLIC GROUT.
5. INDICATES EXISTING 2-INCH THICK SEMI-RIGID FIBERGLASS SOUND ABSORBING MATERIAL (INSULATION) OVER FINISHED WALLS AND CEILING. DAMAGED OR REMOVED INSULATION SHALL BE REPLACED BY THE SAME OR FAVORABLY REVIEWED EQUAL MATERIAL AND ATTACHMENT TO THE EXISTING STRUCTURE. SUBMIT PROCEDURE FOR REMOVAL AND RE-USE OR NEW INSULATION FOR REVIEW PRIOR TO ORDERING ANY MATERIALS.
6. THE NEW GENERATOR AND FUEL TANK SHALL SHALL BE LIMITED TO THE FOLLOWING:
   OVERALL DIMENSIONS (WITH FUEL TANK) = 9'-10" LONG X 3'-11" WIDE X 8'-9" TALL
   MAX OPERATING WEIGHT (INCLUDING FUEL TANK) = 14,260 LBS
7. THE ATTACHMENT OF THE GENERATOR TO THE FUEL TANK AND THE FUEL TANK SHALL BE DESIGNED, DETAILED, FABRICATED, AND INSTALLED BY THE CONTRACTOR AS A DEFERRED SUBMITTAL. REFERENCE DRAWING SHEET S-1 AND SPECIFICATION SECTION 01190 FOR ADDITIONAL INFORMATION.
8. REFERENCE DETAIL 2/S-2 FOR EXHAUST PIPE SUPPORT.
9. REFERENCE DETAIL 3/S-2 FOR SILENCER SUPPORT DETAIL AND PLAN VIEW BRACING PLAN SCHEMATIC. COORDINATE WITH ELECTRICAL AND MECHANICAL DRAWINGS FOR THE PLACEMENT OF THE SILENCER.
10. REFERENCE DETAIL S-3342 FOR MTS EQUIPMENT PAD FOUNDATION. COORDINATE LOCATION WITH CIVIL DRAWINGS.

FINAL SUBMITTAL
(FOR CONSTRUCTION)

REGISTERED PROFESSIONAL ENGINEER JOSEPH JOURDAN
S 6474
EXP. 03/31/2024
signed: 11/22/2023
STRUCTURAL
STATE OF CALIFORNIA
11/22/2023

Kennedy Jenks
9325 SKY PARK COURT, SUITE 300
SAN DIEGO, CA 92123
858-676-7500

SUBMITTED: TIMOTHY WATERS 11/22/2023
PROJECT MANAGER DATE

DATE	INITIAL	REVISION DESCRIPTION	DATE	INITIAL	DATE	INITIAL
ENGINEER OF WORK			OTHER APPROVAL		ACCEPTED	

S-3

SHEET 25 | CITY OF CARLSBAD UTILITIES DEPARTMENT | SHEETS 25

IMPROVEMENT PLAN FOR:
STRUCTURAL
GENERATOR ROOM FOUNDATION PLAN
POINSETTIA LIFT STATION GENERATOR REPLACEMENT

ACCEPTED BY: DAVE PADILLA
Dave Padilla 12/19/2023
ENGINEERING MANAGER DATE

DWN BY: PIB
CHKD BY: PDS
RVWD BY: -

PROJECT NO. 3840-23
DRAWING NO. 540-9